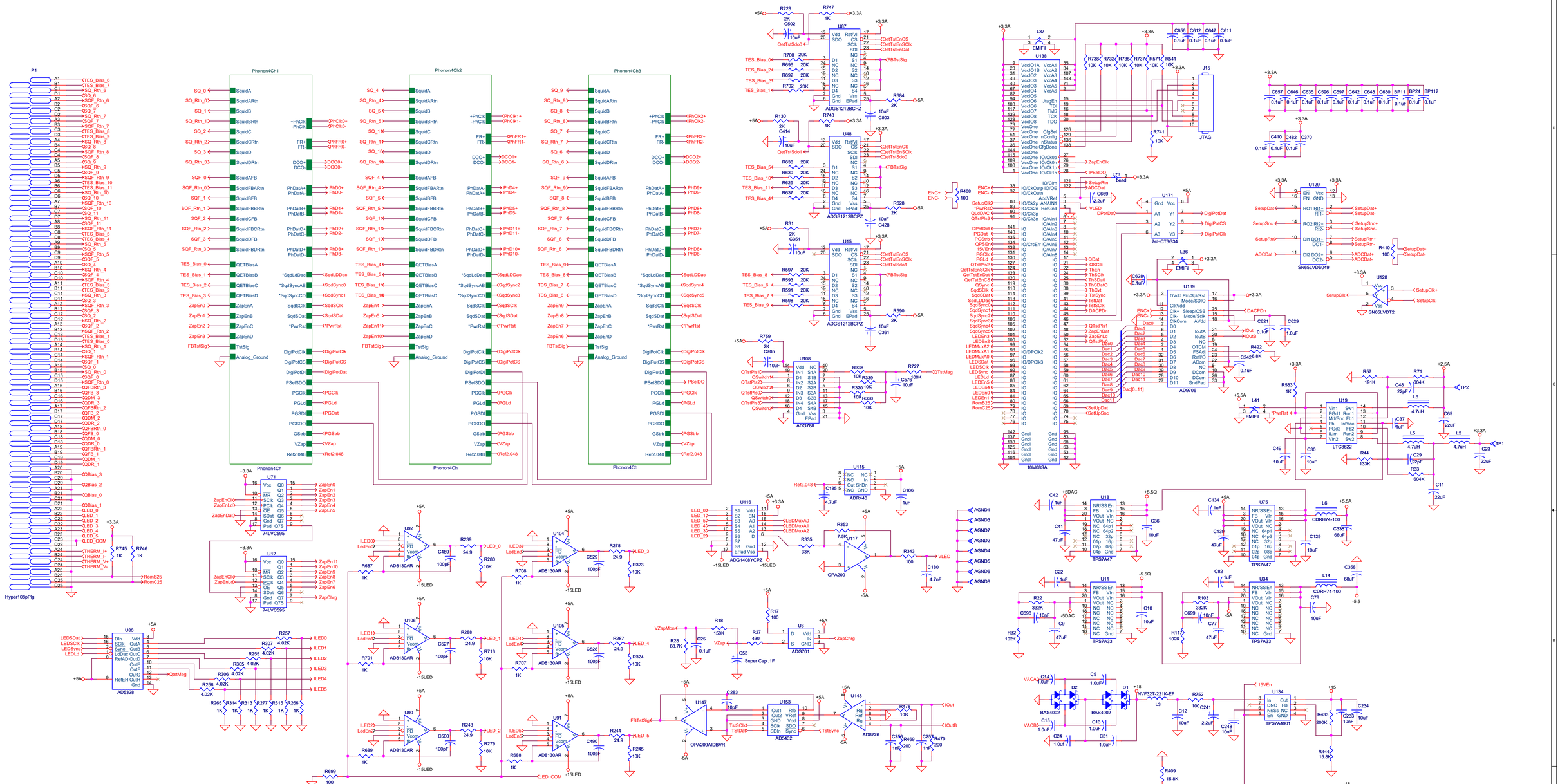
P1
Hyper108pPlg
Phonon4Ch1
Phonon4Ch2
Phonon4Ch3
Phonon4Ch
U87
ADGS1212BCPZ
U48
U15
U108
ADG788
U115
ADR440
U138
EMIFII
10M08SA
J15
JTAG
U171
74HCT3G34
U139
AD9706
U129
SN65LVDS049
U128
SN65LVDT2
U19
LTC3622
U71
74LVCC595
U12
U116
ADG1408YCPZ
U117
OPA209
U92
AD8130AR
U104
U106
U105
U90
U91
U80
AD5328
U147
OPA209AIDBVR
U153
AD5432
U148
AD8226
U3
ADG701
Super Cap .1F
U151
ADA4922
U156
ADG619
U141A
AD8224
U141B
U154
LTC1865CMS
U155
ADR444
U18
TPS7A47
U75
TPS7A47
U11
TPS7A33
U34
TPS7A33
U127
TPS7A3001
U172
TPS7A3001
TPS7A4901
J3
CON5
Title
CDMS DCRC Top Level Analog
Size D
Document Number 173699
Rev G
Date: Friday, July 09, 2021
Sheet 1 of 4

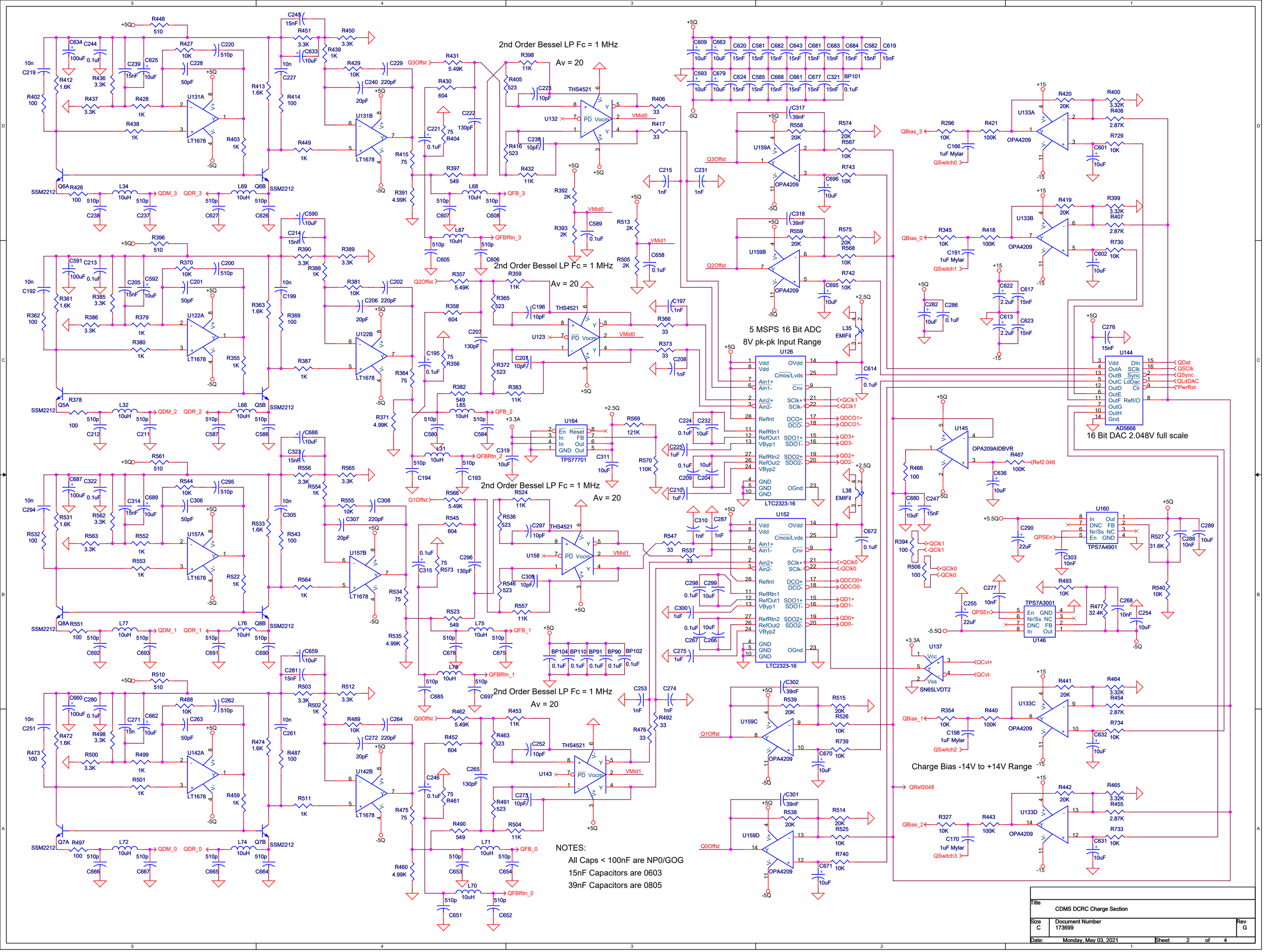
2nd Order Bessel LP Fc = 1 MHz
Av = 20
5 MSPS 16 Bit ADC
8V pk-pk Input Range
16 Bit DAC 2.048V full scale
Charge Bias -14V to +14V Range
NOTES:
All Caps < 100nF are NP0/GOG
15nF Capacitors are 0603
39nF Capacitors are 0805
Title
CDMS DCRC Charge Section
Size
C
Document Number
173699
Rev
G
Date:
Monday, May 03, 2021
Sheet
2
of
4

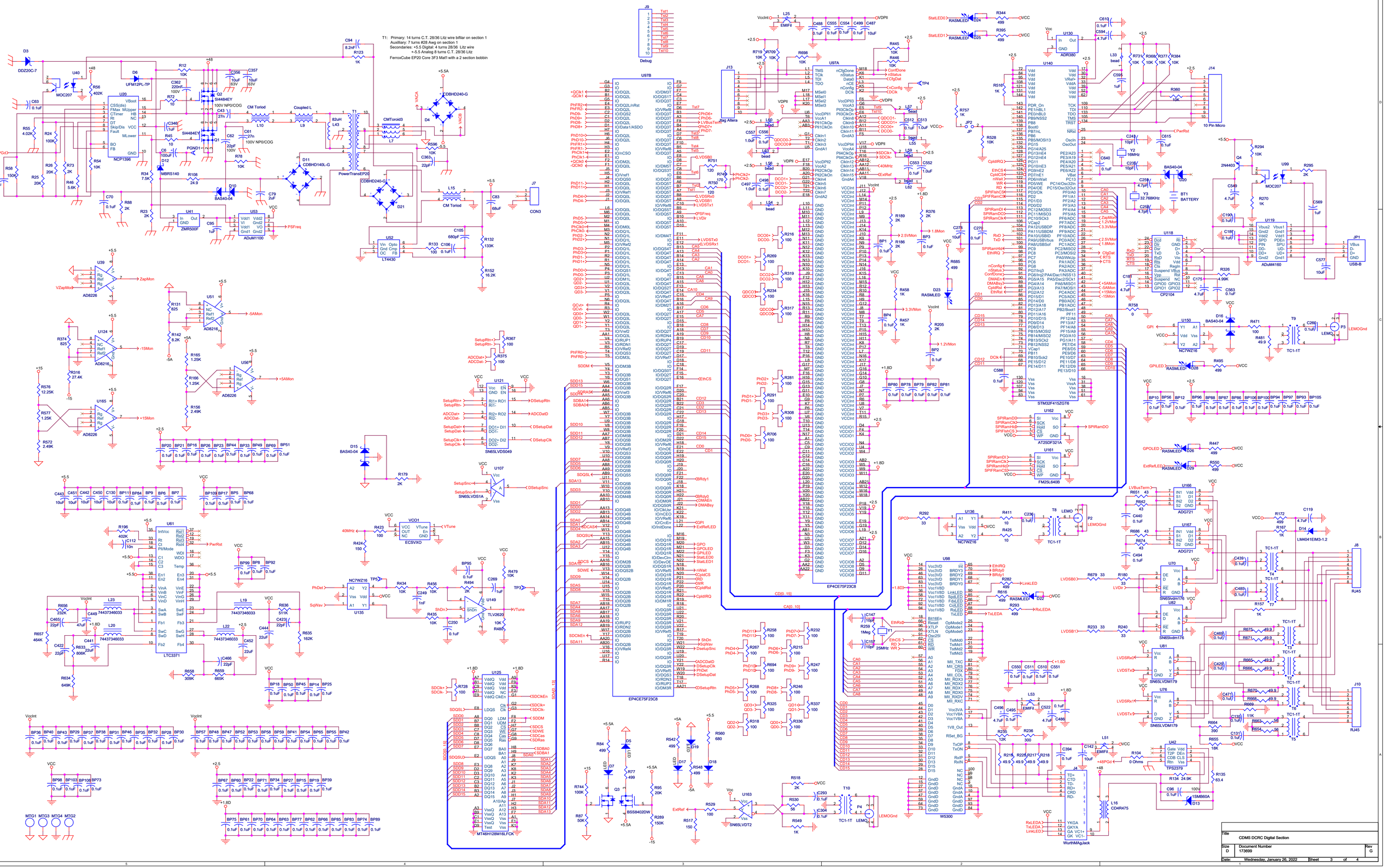
T1: Primary: 14 turns C.T. 28/36 Litz wire bifilar on section 1
Auxiliary: 7 turns #28 Awg on section 1
Secondaries: +5.5 Digital: 4 turns 28/36 Litz wire
+-5.5 Analog 8 turns C.T. 28/36 Litz
FerroxCube EP20 Core 3F3 Mat'l with a 2 section bobbin
U97B
EP4CE75F23C8
U97A
EP4CE75F23C8
U140
STM32F415ZGT6
U130
ADR380
J14
10 Pin Micro
U20
NCP1396
U41
ADuM1100
U53
U52
LT4430
U125
MT46H128M16LFCK
U135
LTC3371
U98
W5300
U96
U136
U137
U138
U139
U149
TLV2620
U150
NC7WZ16
U162
AT25DF321A
U161
FM25L640B
U163
SN65LVDT2
U166
ADG721
U167
ADG721
U70
SN65Vdm176
U82
SN65Vdm176
U81
SN65LVDM179
U76
SN65LVDM179
U42
TPS2379
U118
CP2104
U119
ADuM4160
U99
MOC207
U40
MOC207
U39
AD8226
U124
AD8216
U51
AD8216
U567
AD8226
U165
AD8226
U61
LTC3371
U107
SN65LVDS1
U121
SN65LVDS049
VCD1
ECSVXO
U149
TLV2620
U125
MT46H128M16LFCK
U163
SN65LVDT2
U96
W5300
U42
TPS2379
J9
Debug
J13
Jtag Altera
J7
CON3
J1
USB-B
J8
RJ45
J10
RJ45
J6
WurthMagJack
P3
LEMOGnd
P2
LEMOGnd
T9
TC1-1T
T8
TC1-1T
T10
TC1-1T
T1
T2
T3
T4
T5
T6
T7
D3
DDZ20C-7
D6
UFM12PL-TP
D11
CDBHD140L-G
D21
CDBHD240-G
D4
CDBHD240-G
D12
MBRS140
D10
BAS40-04
D15
BAS40-04
D16
BAS40-04
D17
D18
D19
D20
D21
D22
D23
RASMLED
D24
D25
D26
D28
D29
D13
SMB60A
D14
LM4041EIM3-1.2
Q1
SI4484EY
Q2
SI4484EY
Q3
BSS8402DW
Q4
2N4403
BT1
BATTERY
Y2
16MHz
Y3
32.768KHz
Y1
25MHz
L25
EMIFII
L53
EMIFII
L51
EMIFII
L33
bead
L19
74437346033
L20
74437346033
L22
74437346033
L23
74437346033
L15
CM Toroid
L10
CM Toroid
L9
Coupled L
L43
82uH
L7
CMToroid3
T1
PowerTransEP20
L57
bead
L55
bead
L59
bead
L62
bead
L63
bead
L60
bead
L56
bead
L54
bead
L64
bead
L61
bead
L26
bead
L28
bead
L29
bead
L30
bead
L31
bead
L32
bead
L33
bead
L34
bead
L35
bead
L36
bead
L37
bead
L38
bead
L39
bead
L40
bead
L41
bead
L42
bead
L43
bead
L44
bead
L45
bead
L46
bead
L47
bead

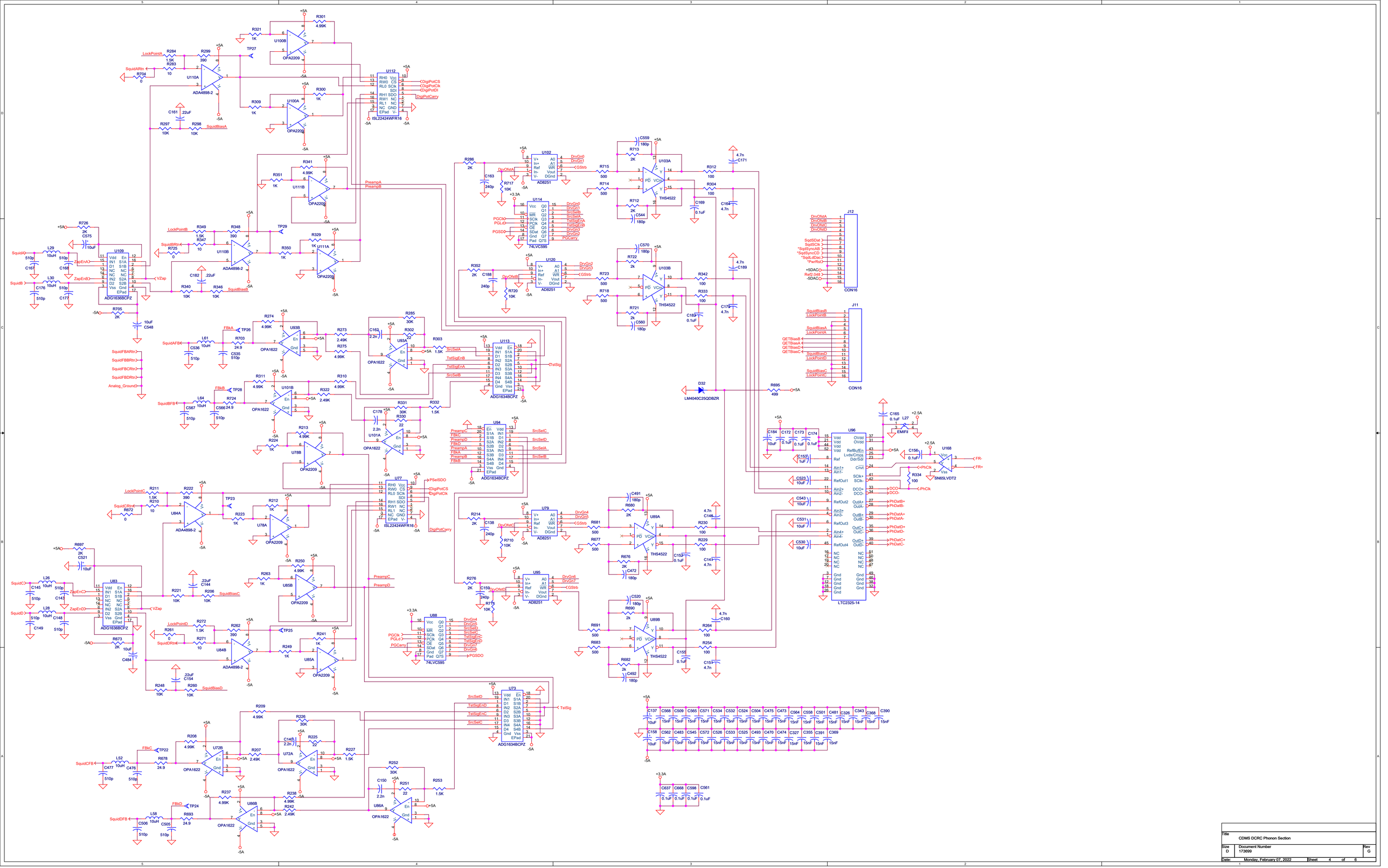
U100B
OPA2209
U100A
OPA2209
U112
RH0 Vcc
RW0 CS
RL0 SCk
SDI
RH1 SDO
RW1 NC
RL1 NC
NC GND
EPad V-
ISL22424WFR16
U110A
ADA4898-2
U110B
ADA4898-2
U109
Vdd En
IN1 S1A
D1 S1B
NC NC
NC NC
IN2 S2A
D2 S2B
Vss Gnd
EPad
ADG1636BCPZ
U111B
OPA2209
U111A
OPA2209
U102
V+ A0
In+ A1
Ref WR
In- Vout
V- DGnd
AD8251
U114
Vcc Q0
Q1
MR Q2
SCk Q3
PCk Q4
OE Q5
SDat Q6
Gnd Q7
Pad Q7S
74LVC595
U120
AD8251
U103A
THS4522
U103B
THS4522
J12
CON16
J11
CON16
D32
LM4040C25QDBZR
U93B
OPA1622
U93A
OPA1622
U101B
OPA1622
U101A
OPA1622
U113
ADG1634BCPZ
U94
ADG1634BCPZ
U78B
OPA2209
U78A
OPA2209
U77
ISL22424WFR16
U84A
ADA4898-2
U79
AD8251
U89A
THS4522
U83
ADG1636BCPZ
U85B
OPA2209
U95
AD8251
U89B
THS4522
U88
74LVC595
U84B
ADA4898-2
U85A
OPA2209
U73
ADG1634BCPZ
U72B
OPA1622
U72A
OPA1622
U86B
OPA1622
U86A
OPA1622
U96
U168
SN65LVDT2
EMIFil
LTC2325-14
LockPointA
SquidARtn
SquidBRtn
LockPointB
SquidBRtn
SquidBiasA
SquidBiasB
PreampA
PreampB
DigiPotCS
DigiPotClk
DigiPotDI
DigiPotCarry
PSelSDO
PGSDO
PGCk
PGLd
PGCarry
DrvOfstA
DrvOfstB
DrvOfstC
DrvOfstD
DrvGn0
DrvGn1
GStrb
DrvGn2
DrvGn3
DrvGn4
DrvGn5
DrvGn6
DrvGn7
TstSigEnA
TstSigEnB
TstSigEnC
TstSigEnD
SrcSelA
SrcSelB
SrcSelC
SrcSelD
TstSig
PreampC
FBkC
PreampD
FBkD
PreampA
FBkA
PreampB
FBkB
SquidAFB
SquidBFB
SquidCFB
SquidDFB
SquidCRtn
SquidDRtn
SquidBiasC
SquidBiasD
LockPointC
LockPointD
SquidA
SquidB
SquidC
SquidD
ZapEnA
ZapEnB
ZapEnC
ZapEnD
VZap
FBkA
FBkB
FBkC
FBkD
SqdSDat
SqdSClk
*SqdSyncAB
*SqdSyncCD
*SqdLdDac
*PwrRst
+5DAC
Ref2.048
-5DAC
QETBiasB
QETBiasA
QETBiasD
QETBiasC
SquidBiasB
LockPointB
SquidBiasA
LockPointA
SquidBiasD
LockPointD
SquidBiasC
LockPointC
PhClk
FR-
FR+
DCO+
DCO-
PhDatB+
PhDatB-
PhDatA+
PhDatA-
PhDatD+
PhDatD-
PhDatC+
PhDatC-
Title
CDMS DCRC Phonon Section
Size D
Document Number 173699
Rev G
Date: Monday, February 07, 2022
Sheet 4 of 6

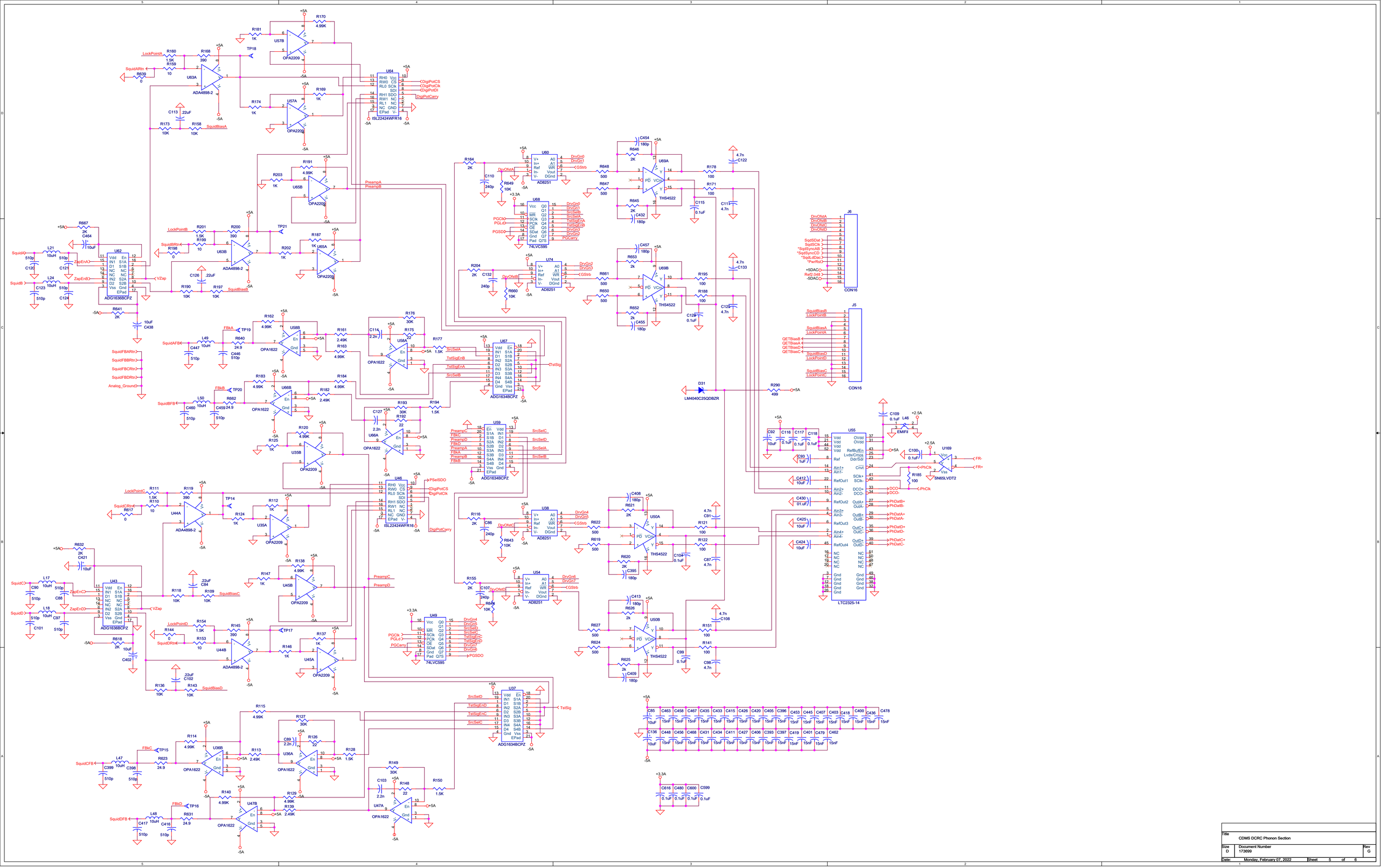

Title	CDMS DCRC Phonon Section
Size D	Document Number 173699
Rev G	
Date: Monday, February 07, 2022	Sheet 5 of 6

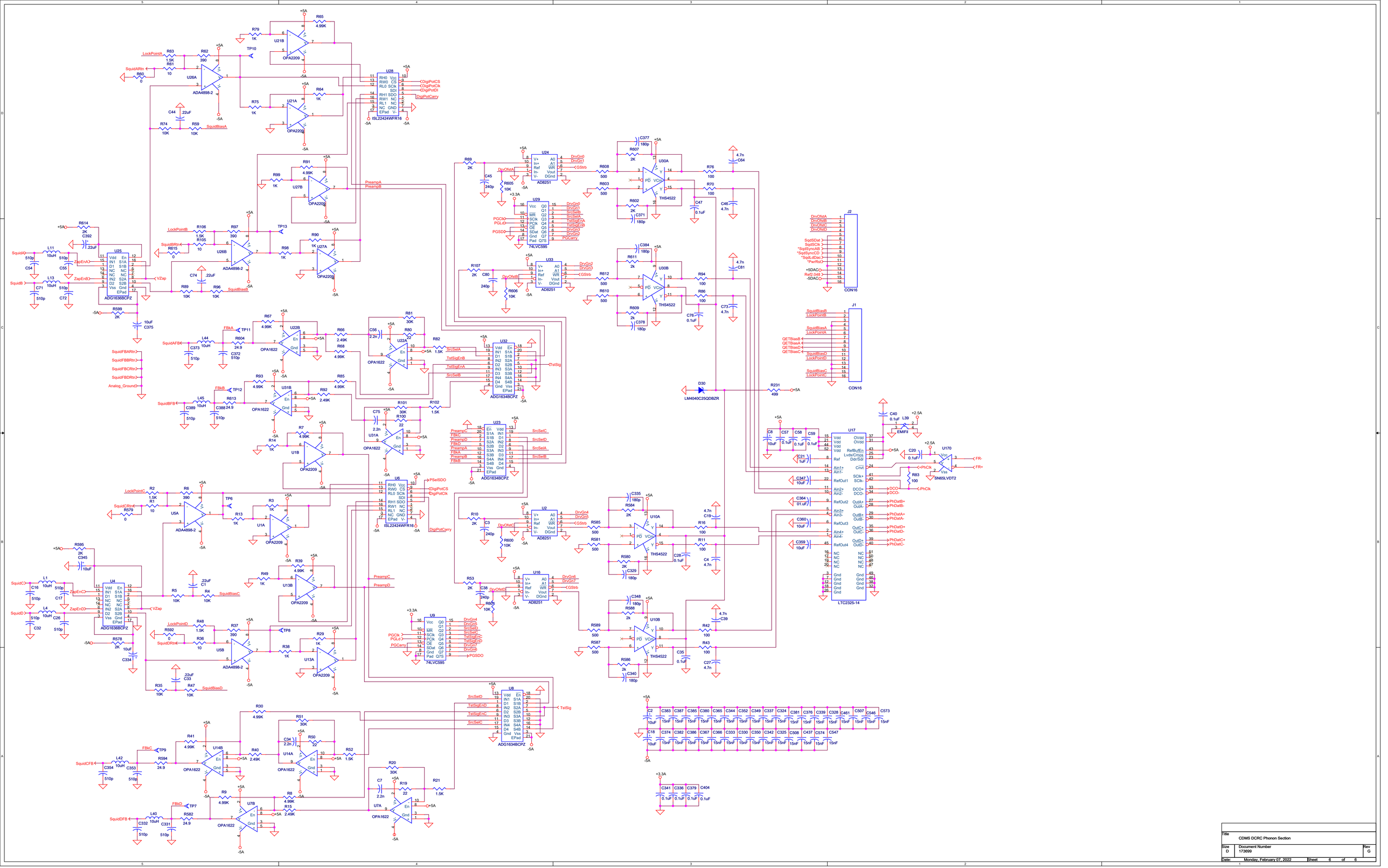

Title	CDMS DCRC Phonon Section
Size D	Document Number 173699
Rev G	
Date: Monday, February 07, 2022	Sheet 6 of 6