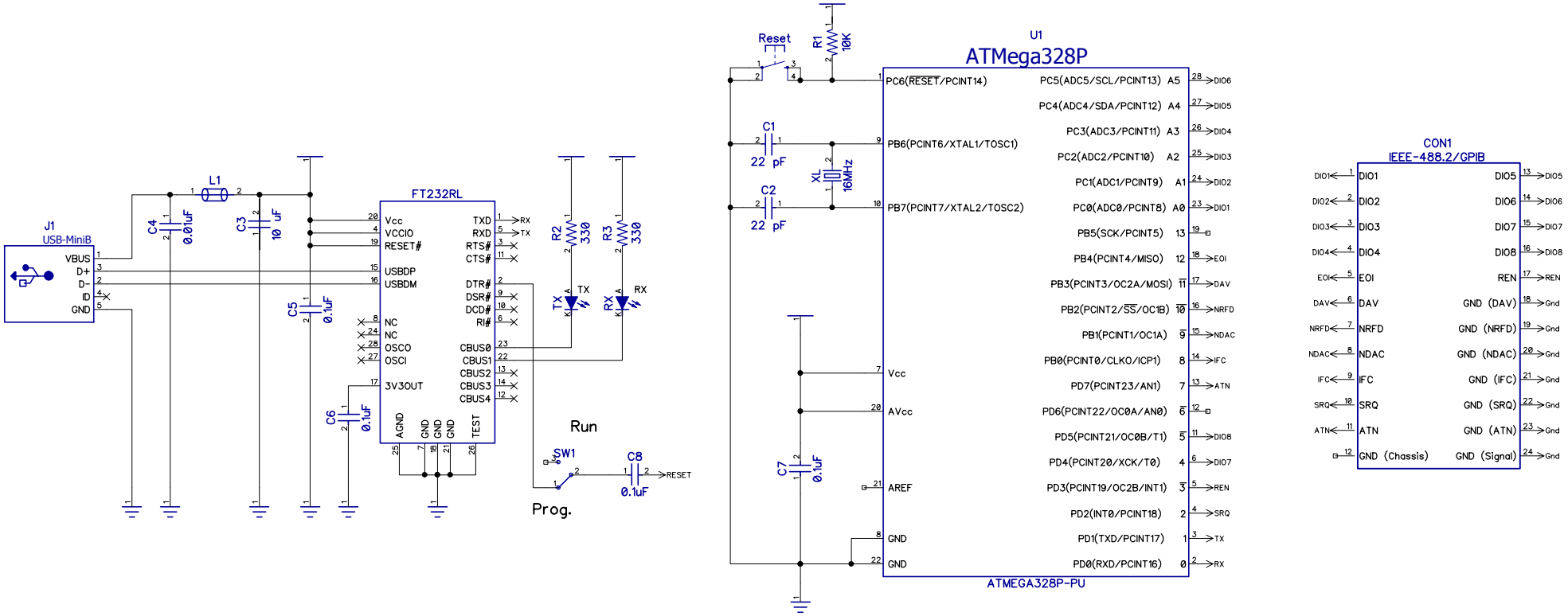
J1
USB-MiniB
VBUS
D+
D-
ID
GND
L1
C4
0.01uF
C3
10 uF
C5
0.1uF
C6
0.1uF
FT232RL
Vcc
VCCIO
RESET#
USBDP
USBDM
NC
NC
OSCO
OSCI
3V3OUT
AGND
GND
GND
GND
TEST
TXD
RXD
RTS#
CTS#
DTR#
DSR#
DCD#
RI#
CBUS0
CBUS1
CBUS2
CBUS3
CBUS4
RX
TX
R2
330
R3
330
TX
RX
Run
SW1
Prog.
C8
0.1uF
RESET
Reset
R1
10K
U1
ATMega328P
PC6(RESET/PCINT14)
PB6(PCINT6/XTAL1/TOSC1)
PB7(PCINT7/XTAL2/TOSC2)
Vcc
AVcc
AREF
GND
GND
PC5(ADC5/SCL/PCINT13) A5
PC4(ADC4/SDA/PCINT12) A4
PC3(ADC3/PCINT11) A3
PC2(ADC2/PCINT10) A2
PC1(ADC1/PCINT9) A1
PC0(ADC0/PCINT8) A0
PB5(SCK/PCINT5) 13
PB4(PCINT4/MISO) 12
PB3(PCINT3/OC2A/MOSI) 11
PB2(PCINT2/SS/OC1B) 10
PB1(PCINT1/OC1A) 9
PB0(PCINT0/CLKO/ICP1) 8
PD7(PCINT23/AN1) 7
PD6(PCINT22/OC0A/AN0) 6
PD5(PCINT21/OC0B/T1) 5
PD4(PCINT20/XCK/T0) 4
PD3(PCINT19/OC2B/INT1) 3
PD2(INT0/PCINT18) 2
PD1(TXD/PCINT17) 1
PD0(RXD/PCINT16) 0
DIO6
DIO5
DIO4
DIO3
DIO2
DIO1
DIO8
DIO7
REN
SRQ
TX
RX
ATMEGA328P-PU
C1
22 pF
C2
22 pF
XL
16MHz
C7
0.1uF
CON1
IEEE-488.2/GPIB
DIO1
DIO2
DIO3
DIO4
EOI
DAV
NRFD
NDAC
IFC
SRQ
ATN
GND (Chassis)
DIO5
DIO6
DIO7
DIO8
REN
GND (DAV)
GND (NRFD)
GND (NDAC)
GND (IFC)
GND (SRQ)
GND (ATN)
GND (Signal)
Gnd