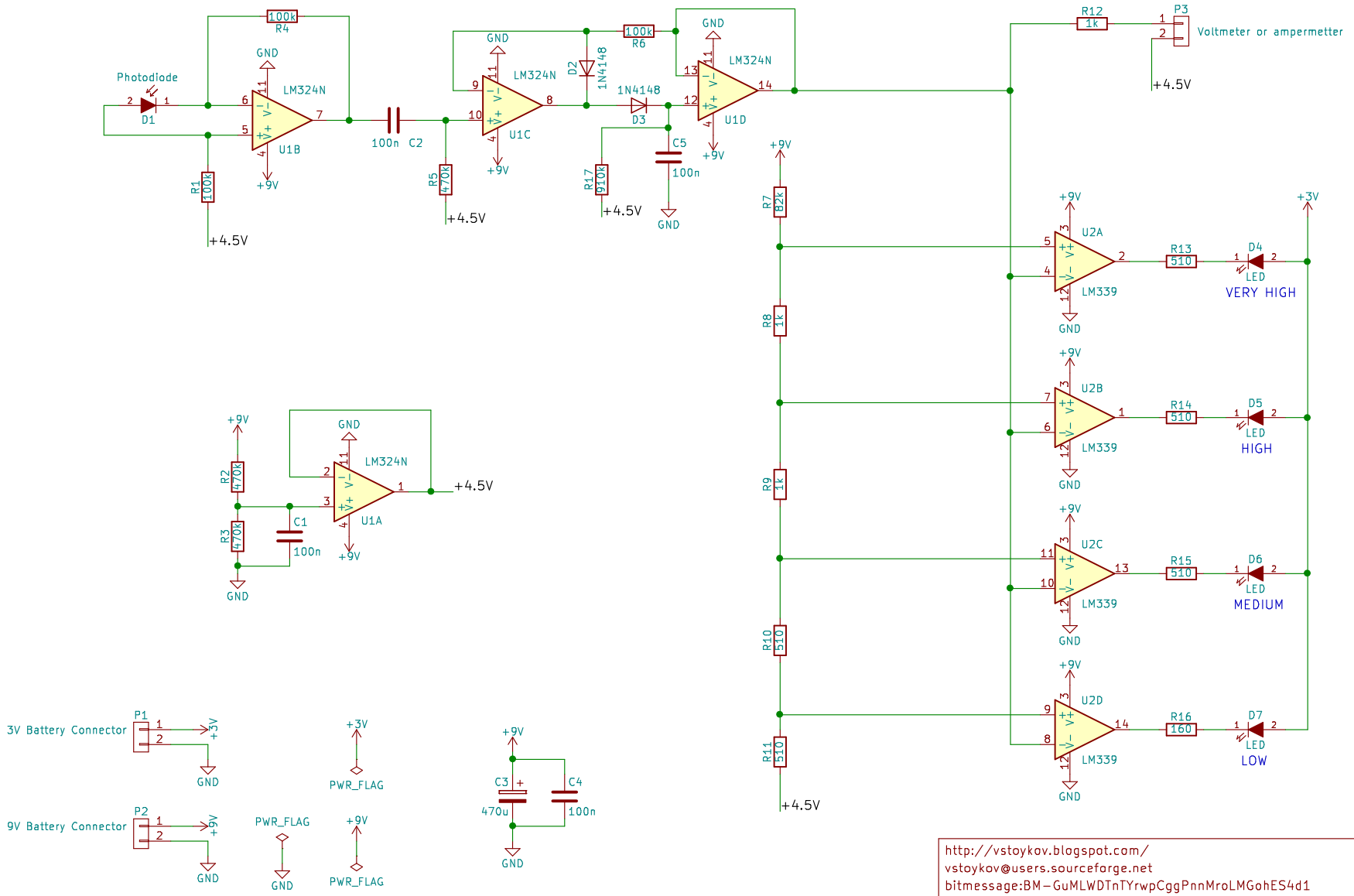

http://vstoykov.blogspot.com/
vstoykov@users.sourceforge.net
bitmessage:BM-GuMLWDTnTYrwpCggPnnMroLMGohES4d1

Valentin Stoykov

Sheet: /
File: optical-pulsation-level-indicator.sch

Title: Optical pulsation level indicator

Size: A4	Date: 2016-10-10	**Rev: 0.1.2**
KiCad E.D.A. kicad 4.0.7-e1-637458ubuntu16.04.1		Id: 1/1