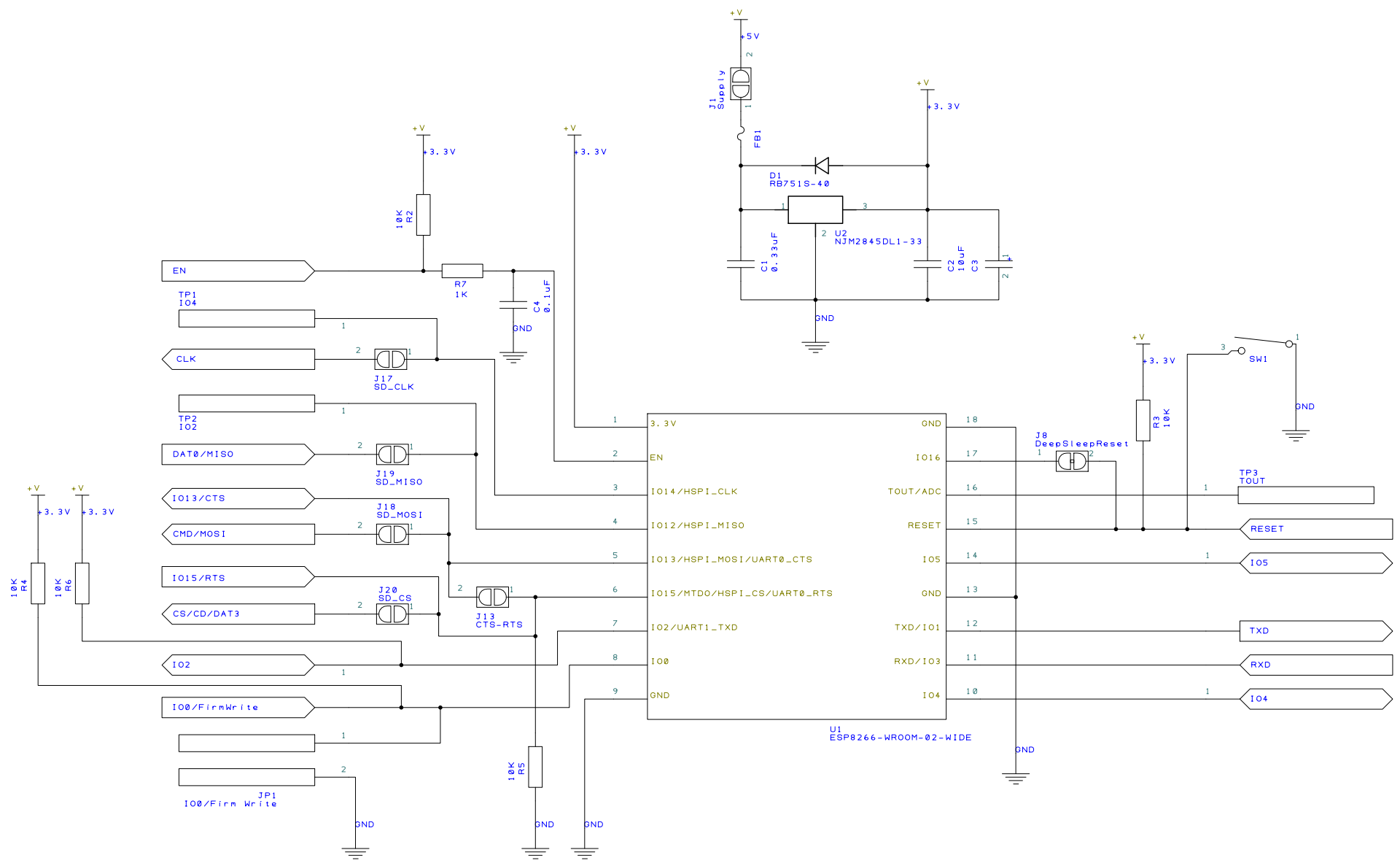

PROJECT: WA-MIKAN
DRAWING TITLE: ESP8266
DRAWN BY: Minao Yamamoto
REVISION: 1.8
SHEET: 1 OF 3
STATUS:
DATE: 2016/07/12

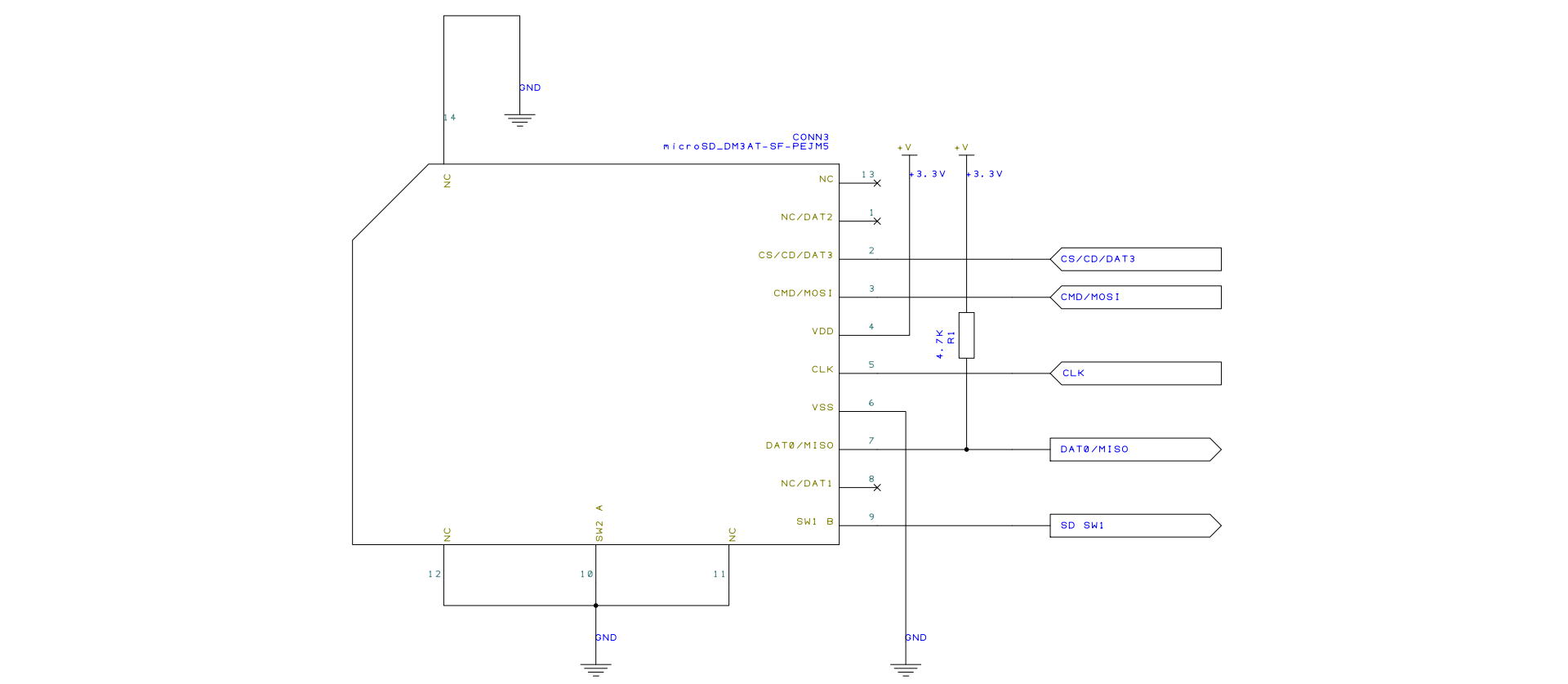

PROJECT: WA-MIKAN
DRAWING TITLE: SD Adapter
DRAWN BY: Minao Yamamoto
REVISION: 1.8
SHEET: 1 OF 3
STATUS:
DATE: 2016/07/12

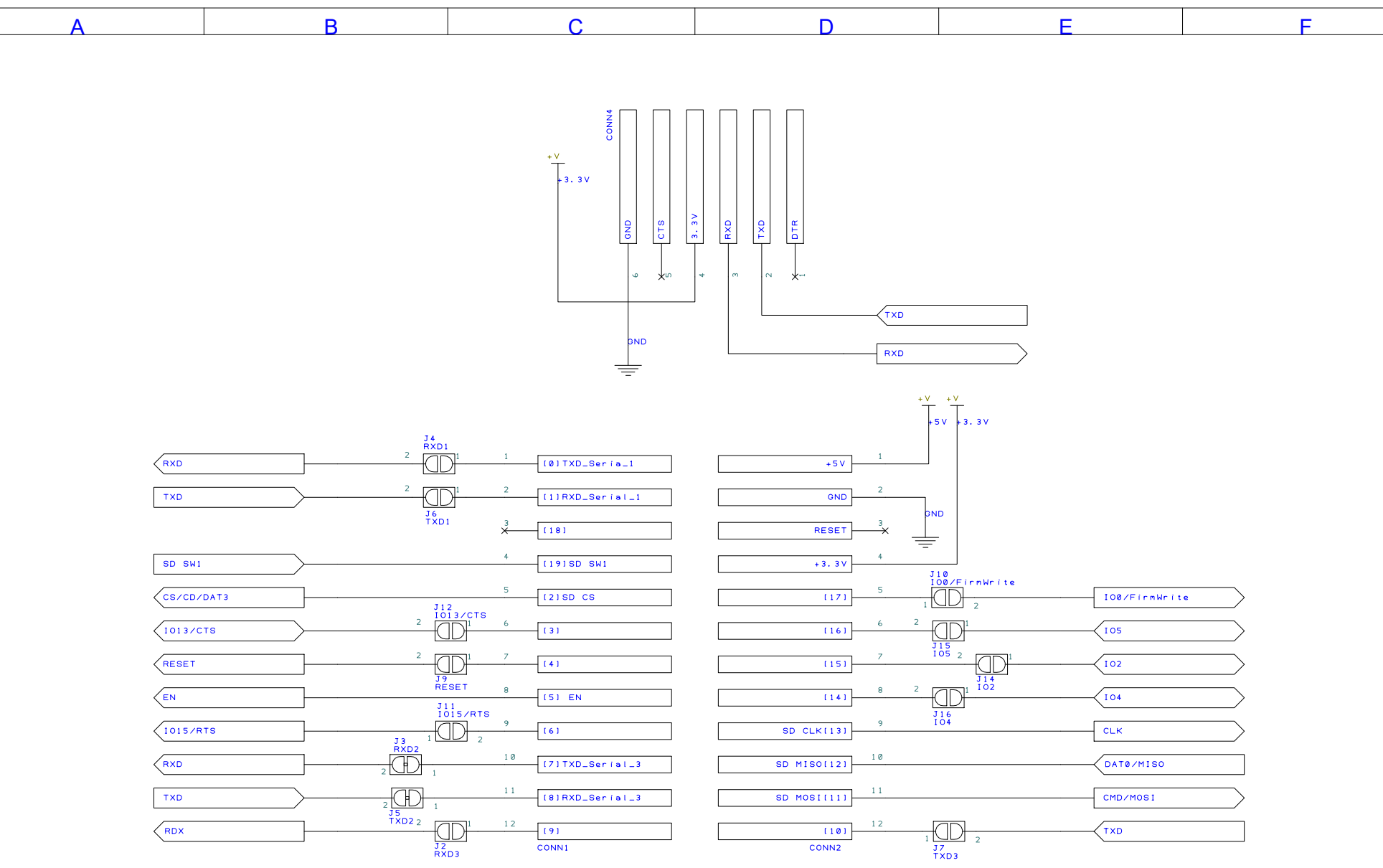

PROJECT: WA-MIKAN
DRAWING TITLE: Connecters
DRAWN BY: Minao Yamamoto
REVISION: 1.8
SHEET: 1 OF 3
STATUS:
DATE: 2016/07/12