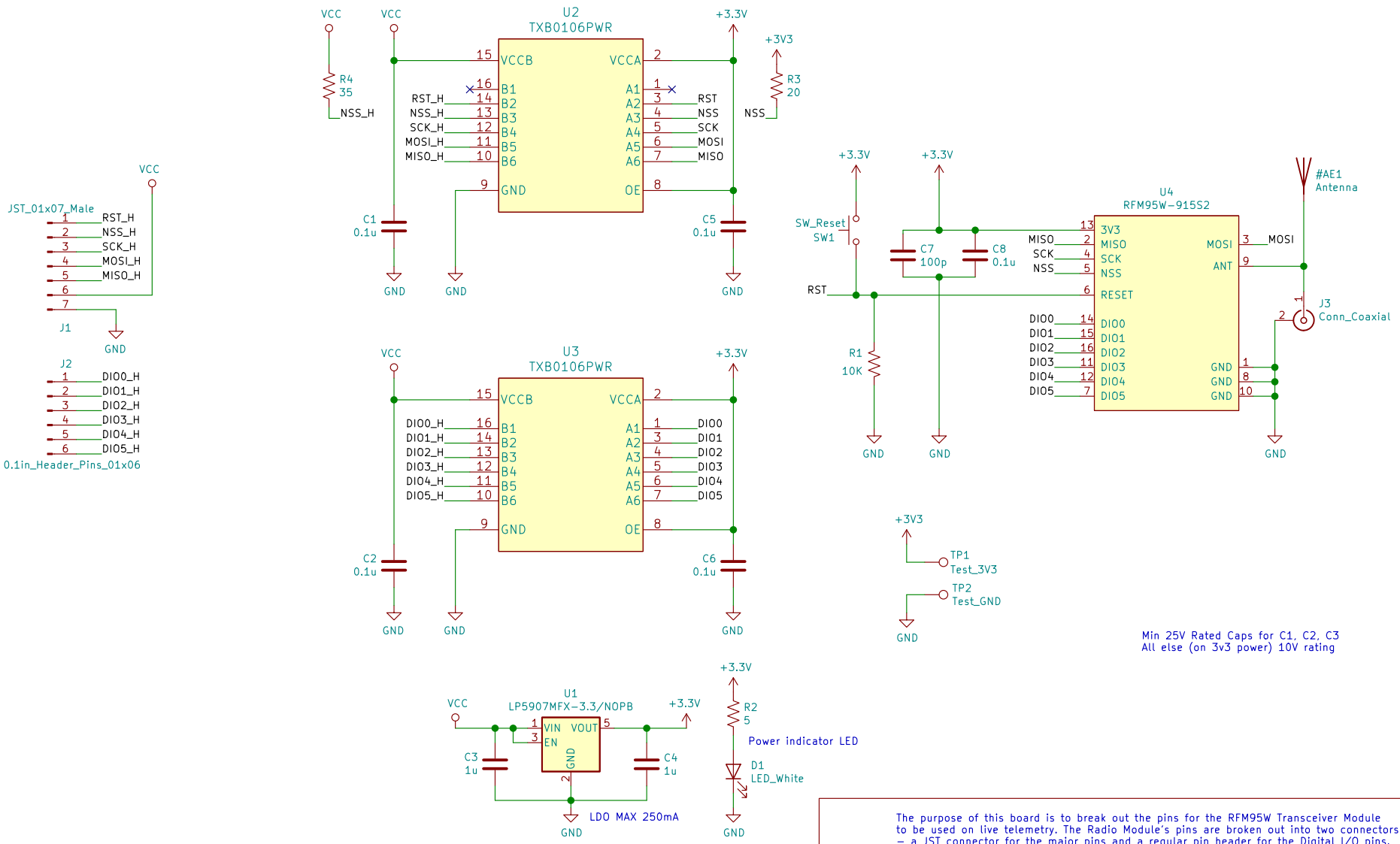

Min 25V Rated Caps for C1, C2, C3
All else (on 3v3 power) 10V rating

The purpose of this board is to break out the pins for the RFM95W Transceiver Module to be used on live telemetry. The Radio Module's pins are broken out into two connectors – a JST connector for the major pins and a regular pin header for the Digital I/O pins. All pins are level-shifted to 3.3V

Waterloo Rocketry

Sheet: /
File: telemetry_breakout.sch

Title: Live Telemetry – Transceiver Breakout

Size: A4	Date: 2020-05-03	**Rev: v01**
KiCad E.D.A. kicad (5.1.5)-3		Id: 1/1