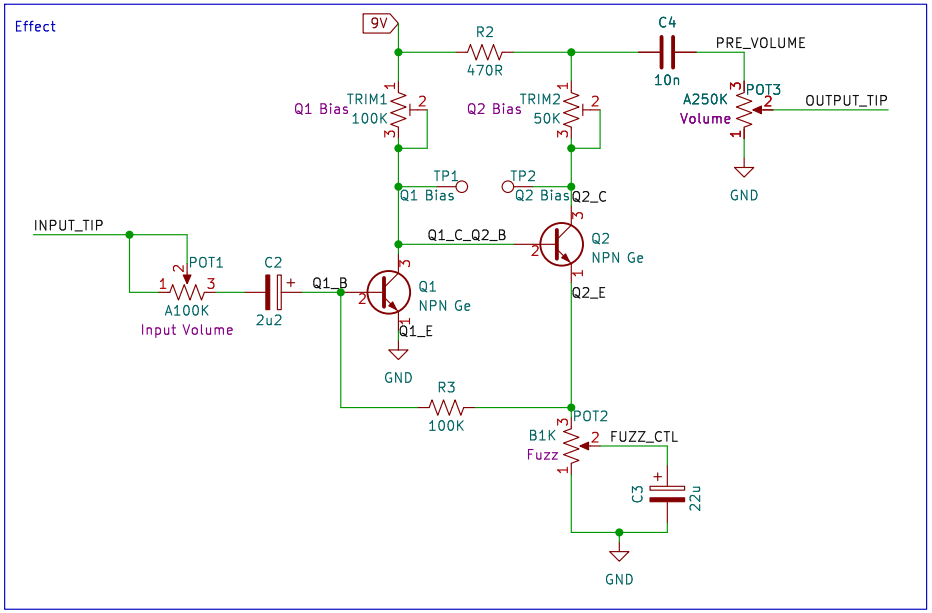

Designed for medium gain NPN Germanium transistors
Example: 2N1306

For PNP transistors, provide −9V and swap polarity of electrolytic caps.

Transistor pinout
1: Emitter
2: Base
3: Collector

Bias using TRIM1 (Q1), then TRIM2 (Q2)

Use multiturn trimpots to aid in bias adjustment

Start without input signal with circuit powered.
Q1: Adjust TRIM1 while probing TP1 DC voltage (target of 500−700mV to get in the ballpark)
Q2: Adjust TRIM2 while probing TP2 DC voltage (target of 5.0 V)

Drive input with an attenuated sine wave and monitor test points on a scope for fine tuning.

Q1: Adjust TRIM1 to asymmetrically clipping "nipple" shape.
Q2: Adjust TRIM2 to symmetric clipping trapezoid shape.

Confirm non−attenuated signal produces a still−rounded "U" shape on Q1, and a hard square wave on Q2.

Adjust max fuzz to ear, pull back on fuzz then clean up with Input Volume pot (or guitar volume).

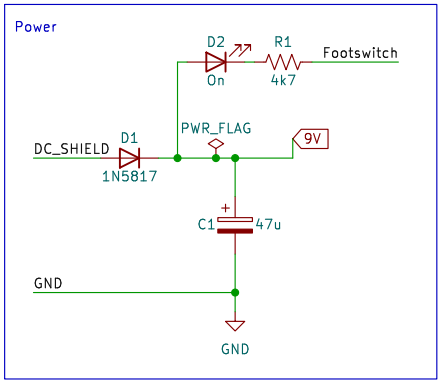

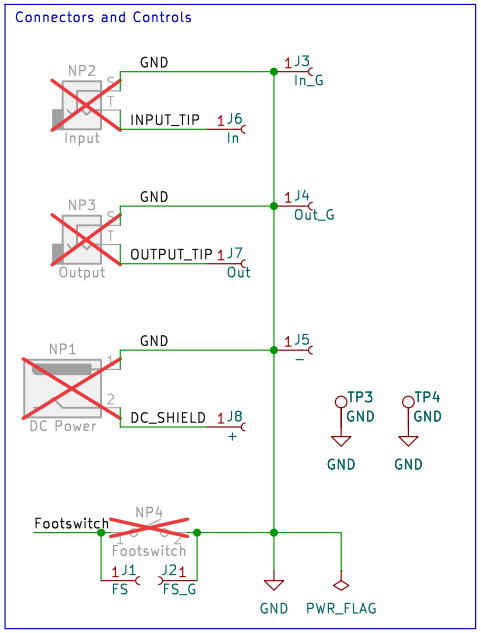

Sheet: /
File: random_input.kicad_sch

Title: Random Input Fuzz Effect (Based on Fuzz Face)

Size: A4	Date: 2023−02−21	Rev: v0.1
KiCad E.D.A. kicad (7.0.0)		Id: 1/1