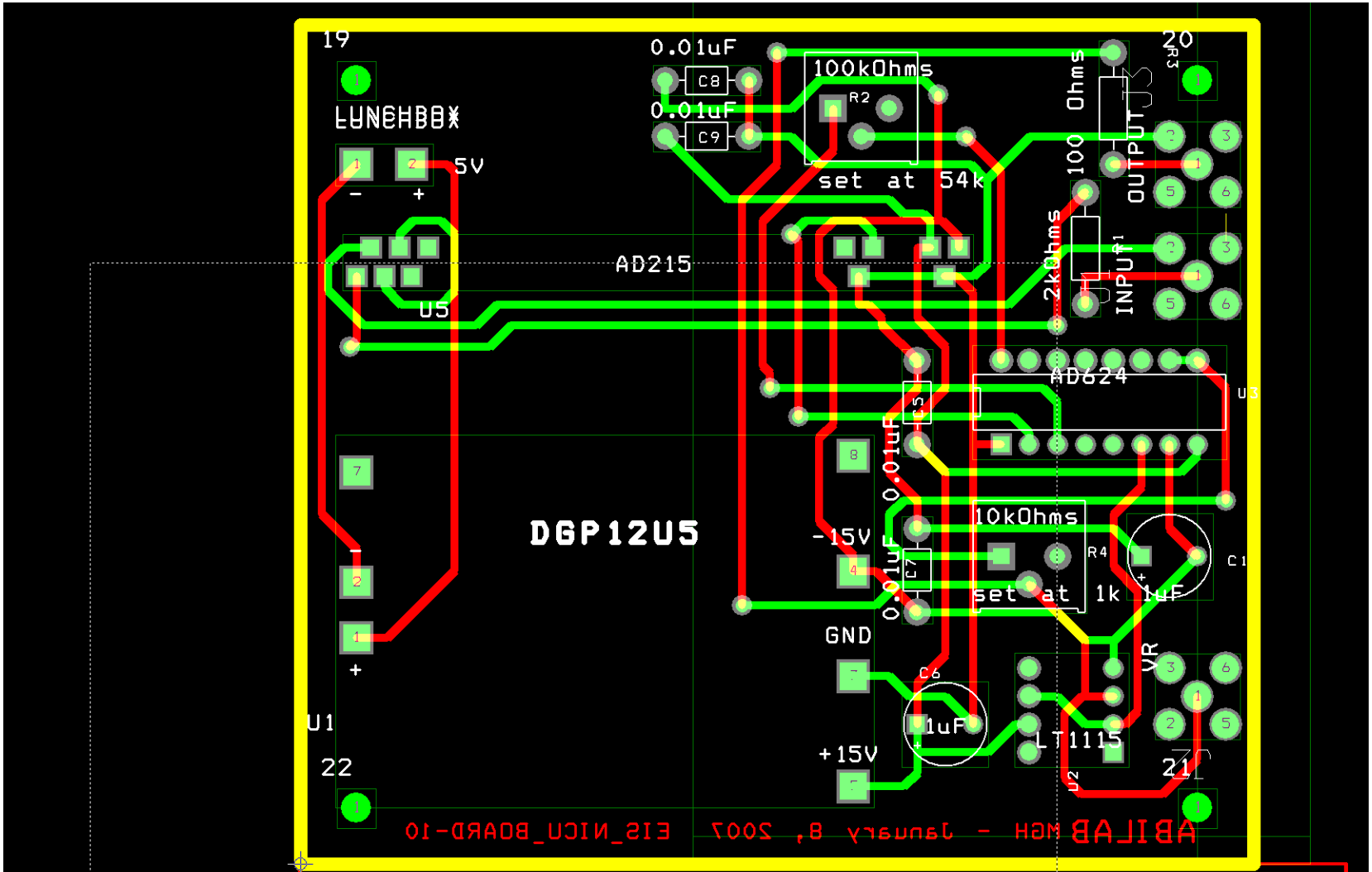

DRILL CHART

SYM	DIAM	TOL	QTY	NOTE
⊕	0.028		40	
+	0.034		28	
⊞	0.067		24	