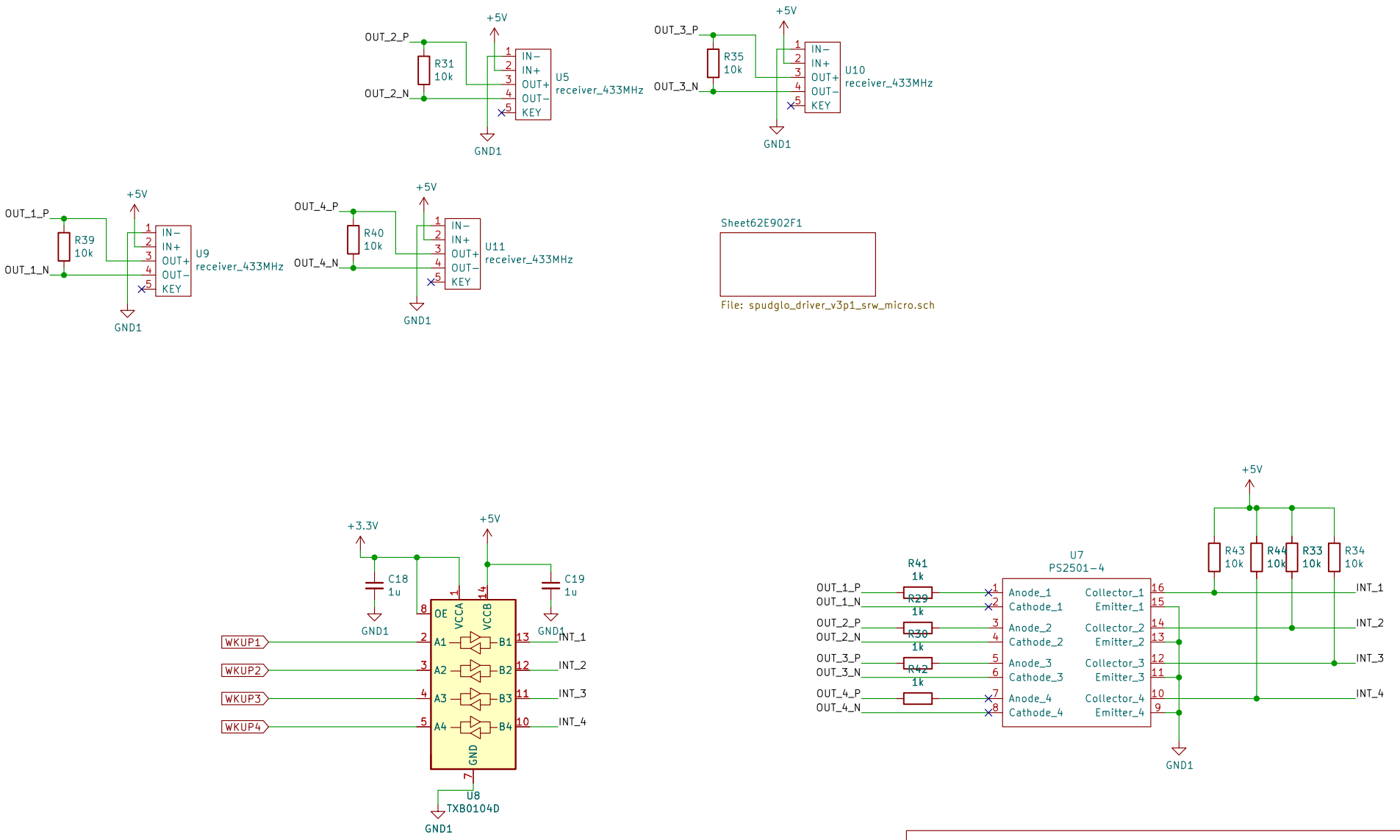

Sheet: /
File: spudglo_driver_v3p1_srw.sch

Title:

Size: A4	Date:	Rev:
KiCad E.D.A. eeschema (6.0.9−0)		Id: 1/2

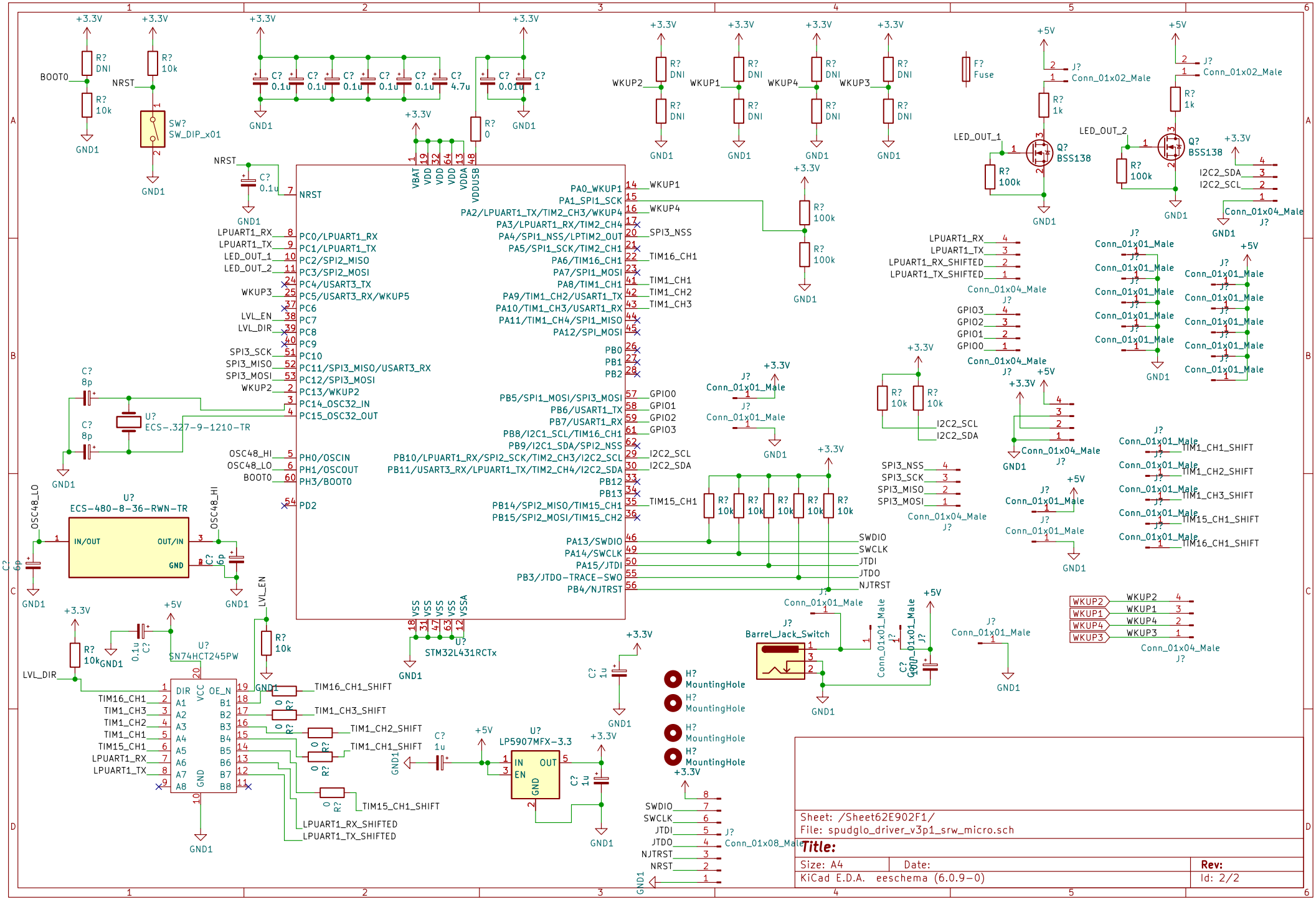
U? STM32L431RCTx
U? ECS-480-8-36-RWN-TR
U? ECS-.327-9-1210-TR
U? SN74HCT245PW
U? LP5907MFX-3.3
SW? SW_DIP_x01
Barrel_Jack_Switch
Q? BSS138
Q? BSS138
F? Fuse
Conn_01x02_Male
Conn_01x04_Male
Conn_01x01_Male
Conn_01x08_Male
MountingHole
Sheet: /Sheet62E902F1/
File: spudglo_driver_v3p1_srw_micro.sch
Title:
Size: A4
Date:
Rev:
KiCad E.D.A. eeschema (6.0.9-0)
Id: 2/2