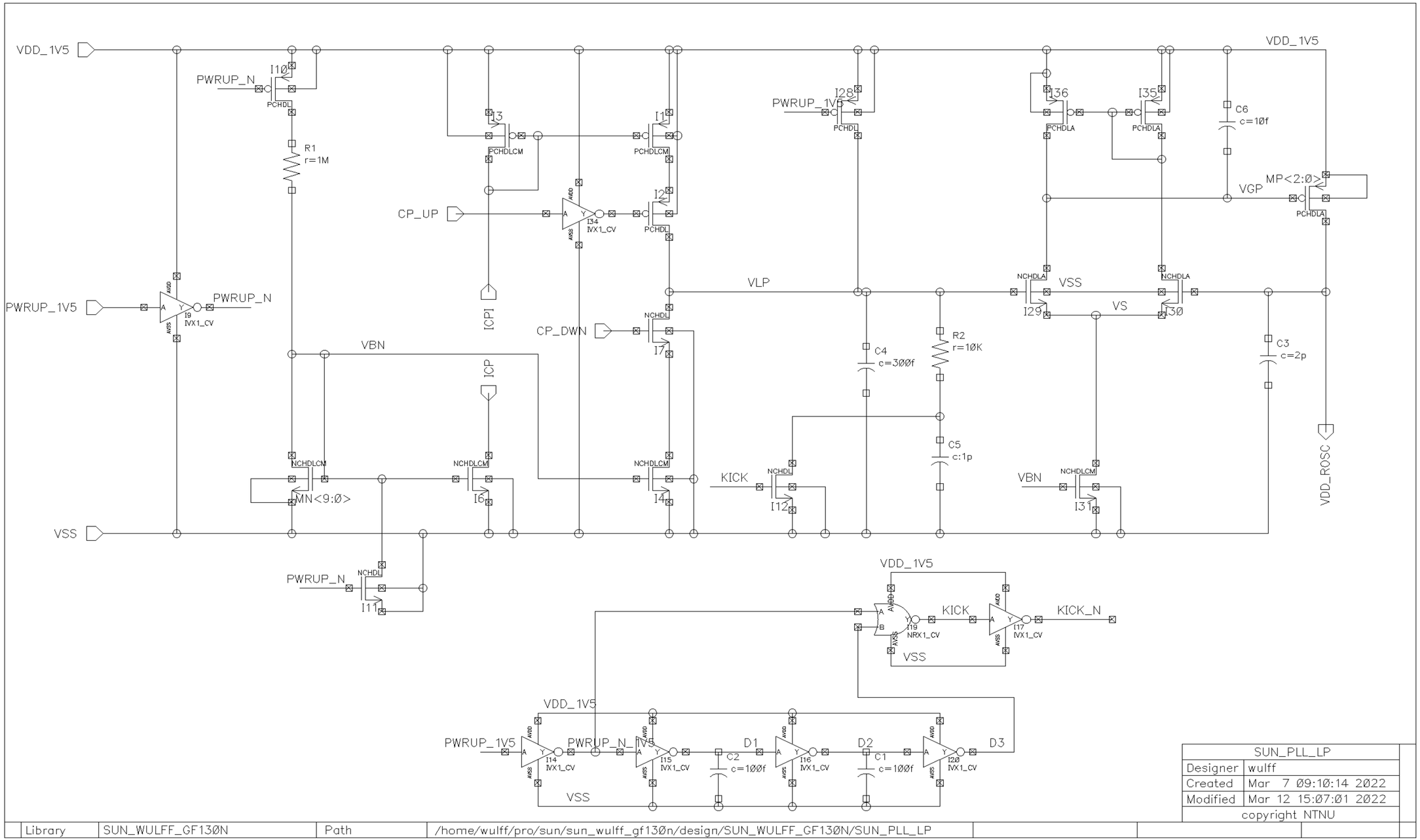

SUN_PLL_LP	
Designer	wulff
Created	Mar 7 09:10:14 2022
Modified	Mar 12 15:07:01 2022
copyright NTNU	

Library	SUN_WULFF_GF130N	Path	/home/wulff/pro/sun/sun_wulff_gf130n/design/SUN_WULFF_GF130N/SUN_PLL_LP