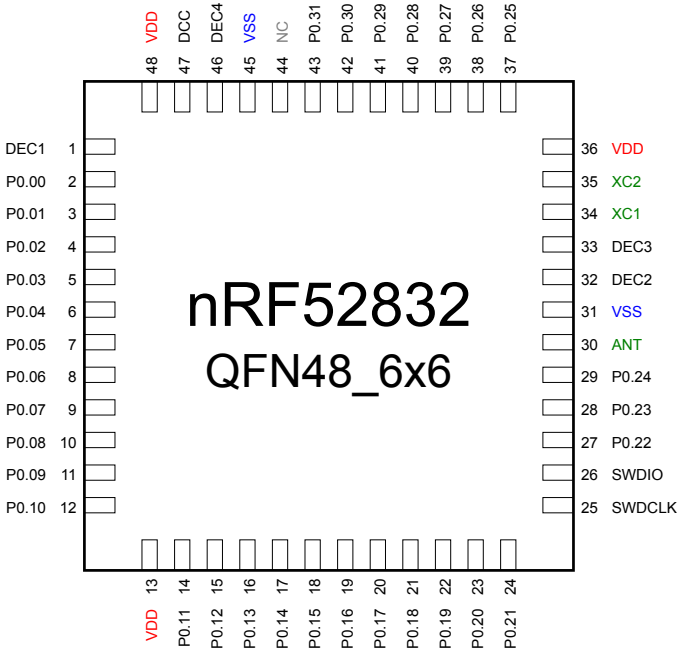
nRF52832
QFN48_6x6
DEC1 1
P0.00 2
P0.01 3
P0.02 4
P0.03 5
P0.04 6
P0.05 7
P0.06 8
P0.07 9
P0.08 10
P0.09 11
P0.10 12
13 VDD
14 P0.11
15 P0.12
16 P0.13
17 P0.14
18 P0.15
19 P0.16
20 P0.17
21 P0.18
22 P0.19
23 P0.20
24 P0.21
25 SWDCLK
26 SWDIO
27 P0.22
28 P0.23
29 P0.24
30 ANT
31 VSS
32 DEC2
33 DEC3
34 XC1
35 XC2
36 VDD
37 P0.25
38 P0.26
39 P0.27
40 P0.28
41 P0.29
42 P0.30
43 P0.31
44 NC
45 VSS
46 DEC4
47 DCC
48 VDD

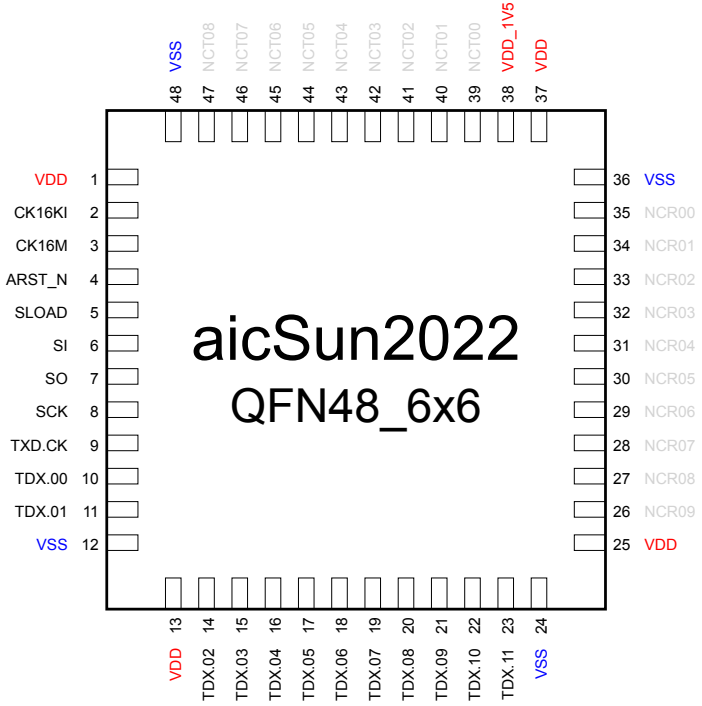
aicSun2022
QFN48_6x6
VDD 1
CK16KI 2
CK16M 3
ARST_N 4
SLOAD 5
SI 6
SO 7
SCK 8
TXD.CK 9
TDX.00 10
TDX.01 11
VSS 12
13 VDD
14 TDX.02
15 TDX.03
16 TDX.04
17 TDX.05
18 TDX.06
19 TDX.07
20 TDX.08
21 TDX.09
22 TDX.10
23 TDX.11
24 VSS
25 VDD
26 NCR09
27 NCR08
28 NCR07
29 NCR06
30 NCR05
31 NCR04
32 NCR03
33 NCR02
34 NCR01
35 NCR00
36 VSS
37 VDD
38 VDD_1V5
39 NCT00
40 NCT01
41 NCT02
42 NCT03
43 NCT04
44 NCT05
45 NCT06
46 NCT07
47 NCT08
48 VSS