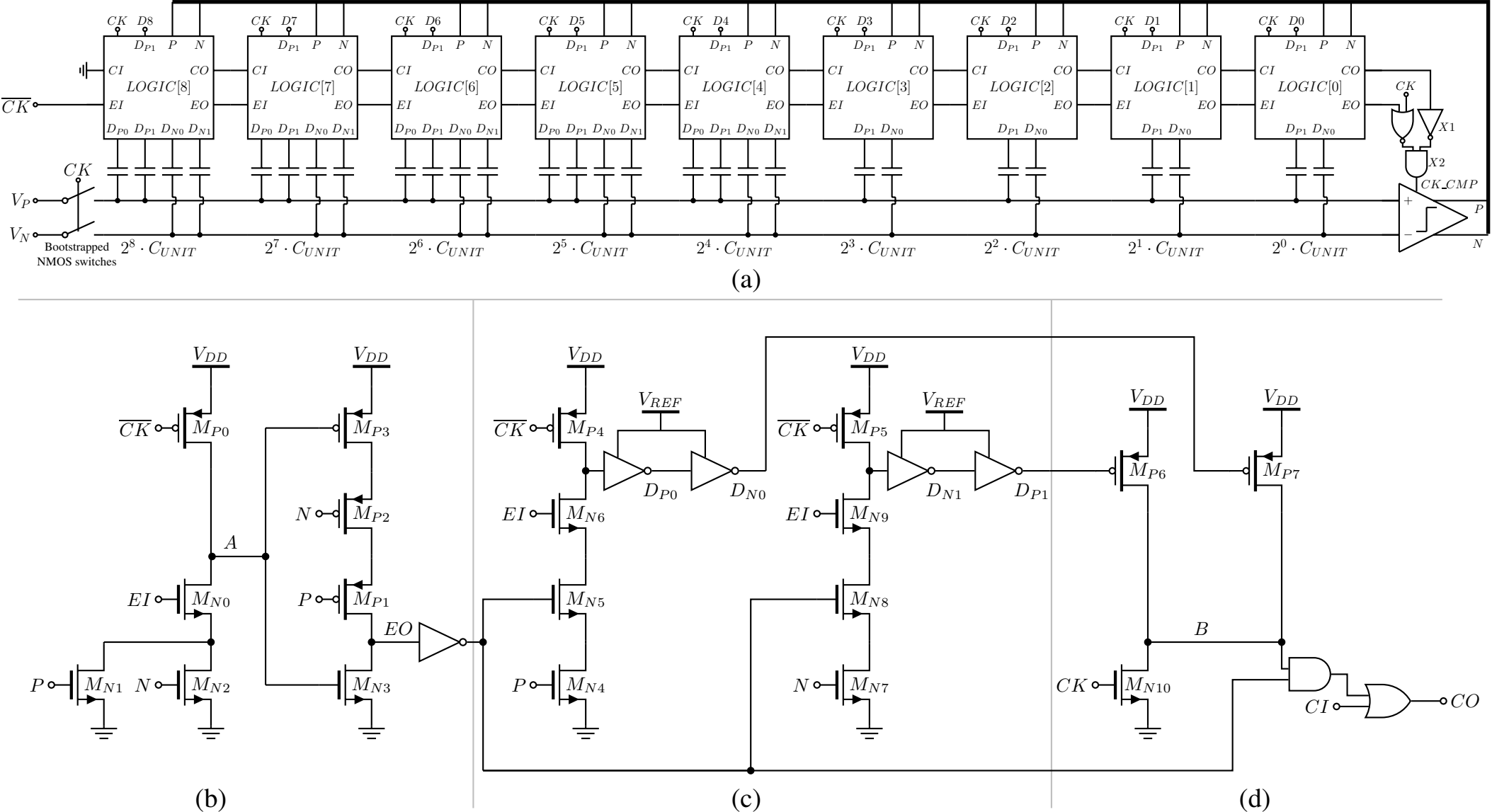
LOGIC[8]
LOGIC[7]
LOGIC[6]
LOGIC[5]
LOGIC[4]
LOGIC[3]
LOGIC[2]
LOGIC[1]
LOGIC[0]
CK
CK_CMP
X1
X2
Bootstrapped NMOS switches
(a)
(b)
(c)
(d)