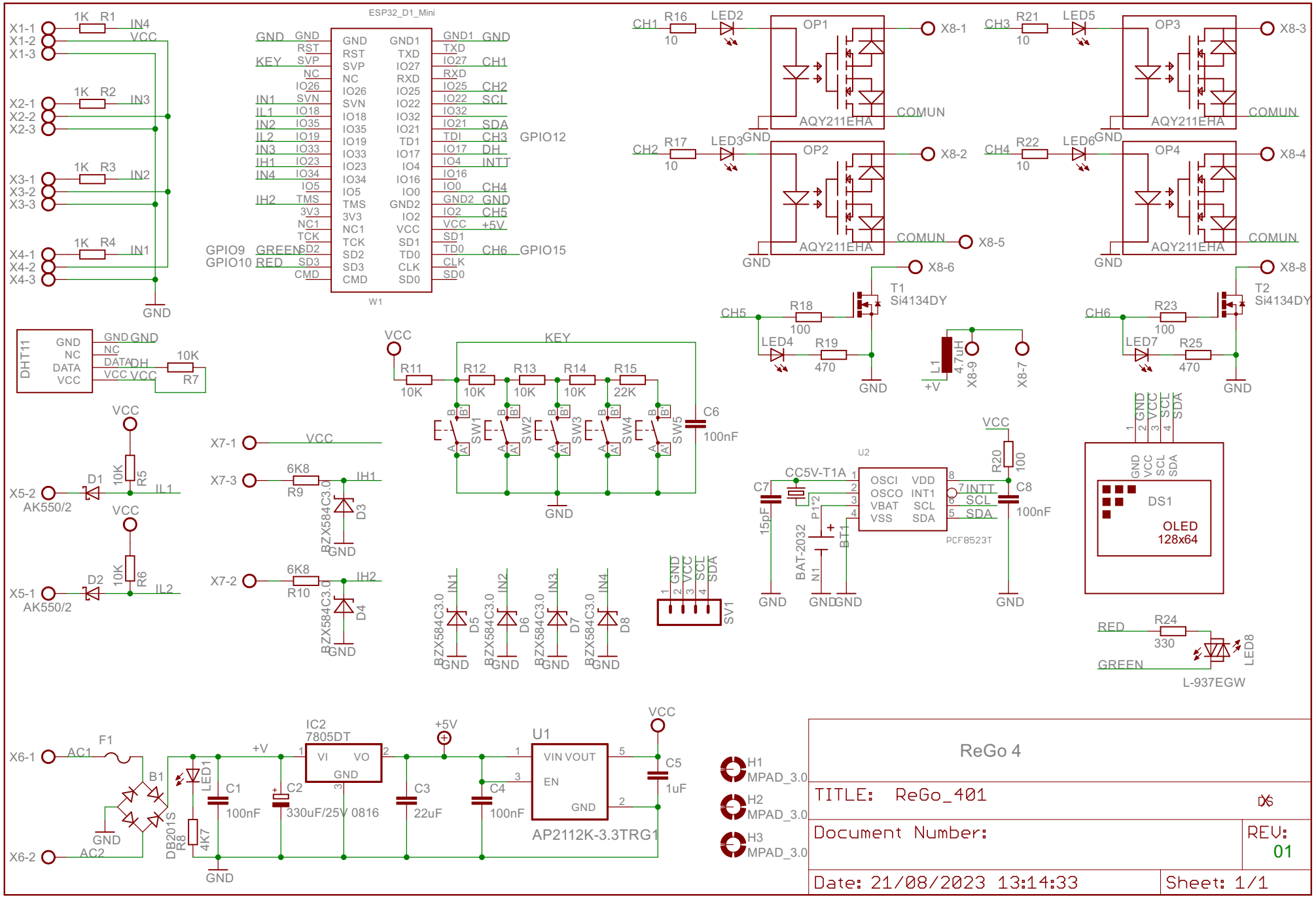
ESP32_D1_Mini
W1
X1-1
X1-2
X1-3
X2-1
X2-2
X2-3
X3-1
X3-2
X3-3
X4-1
X4-2
X4-3
1K R1
1K R2
1K R3
1K R4
IN4
IN3
IN2
IN1
VCC
GND
KEY
IN1
IL1
IN2
IL2
IN3
IH1
IN4
IH2
GPIO9 GREEN
GPIO10 RED
GPIO12
GPIO15
CH1
CH2
CH3
CH4
CH5
CH6
DH
INTT
+5V
CH1 R16 LED2
CH2 R17 LED3
CH3 R21 LED5
CH4 R22 LED6
10
OP1
OP2
OP3
OP4
AQY211EHA
COMUN
X8-1
X8-2
X8-3
X8-4
X8-5
X8-6
X8-7
X8-8
X8-9
T1
T2
Si4134DY
R18
R19
R23
R25
100
470
LED4
LED7
L1
4.7uH
+V
DHT11
GND
NC
DATA
VCC
10K
R7
R11
R12
R13
R14
R15
10K
22K
SW1
SW2
SW3
SW4
SW5
C6
100nF
X7-1
X7-3
X7-2
6K8
R9
R10
BZX584C3.0
D3
D4
D5
D6
D7
D8
D1
D2
R5
R6
X5-2
X5-1
AK550/2
SV1
U2
CC5V-T1A
C7
15pF
BAT-2032
BT1
OSCI
OSCO
VBAT
VSS
VDD
INT1
SCL
SDA
PCF8523T
R20
C8
DS1
OLED
128x64
RED
GREEN
R24
330
LED8
L-937EGW
X6-1
X6-2
AC1
AC2
F1
B1
DB201S
LED1
R8
4K7
C1
100nF
C2
330uF/25V 0816
IC2
7805DT
VI
VO
C3
22uF
C4
100nF
U1
VIN VOUT
EN
AP2112K-3.3TRG1
C5
1uF
H1
H2
H3
MPAD_3.0
ReGo 4
TITLE: ReGo_401
Document Number:
REV: 01
Date: 21/08/2023 13:14:33
Sheet: 1/1