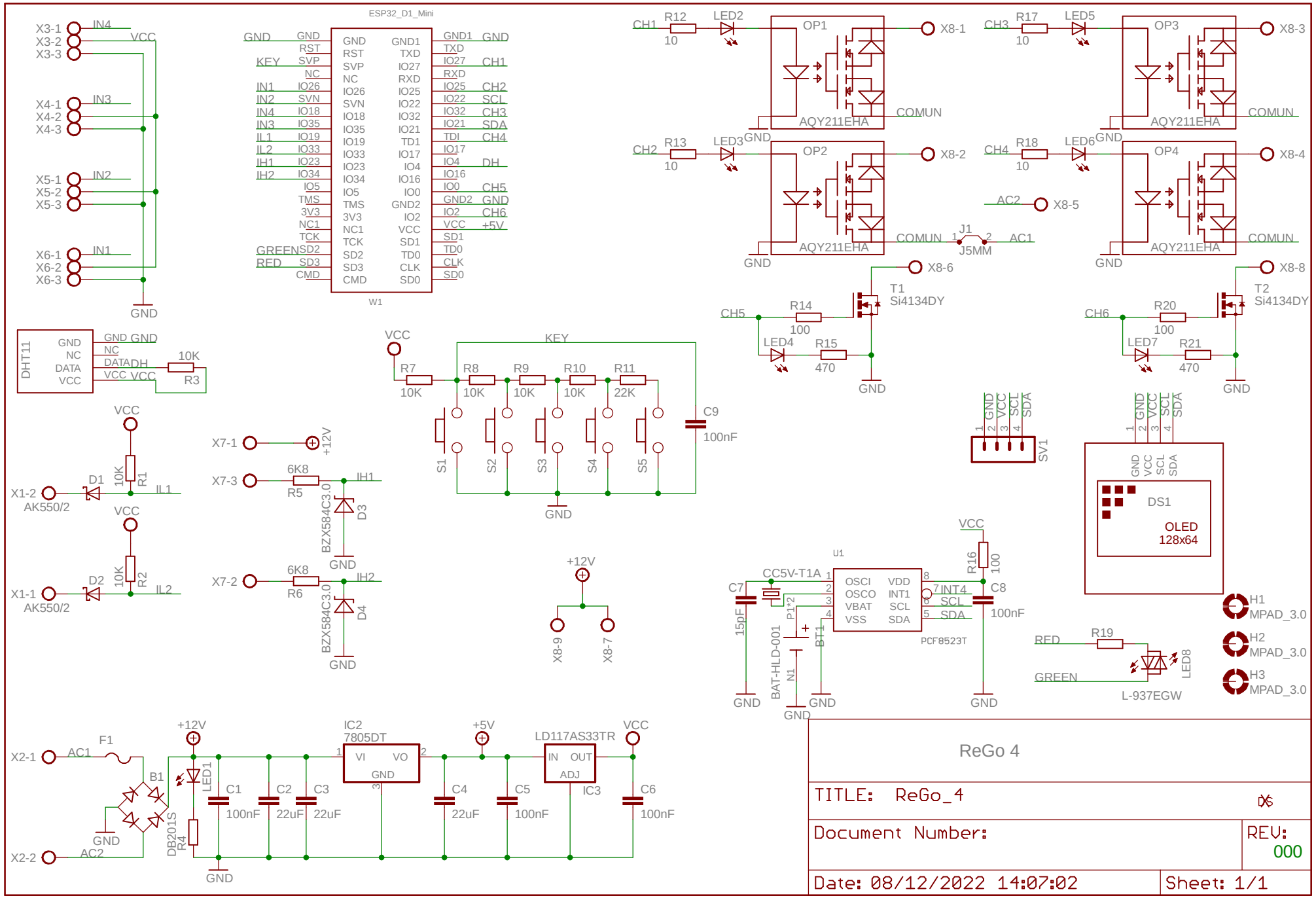
ESP32_D1_Mini
W1
GND
RST
SVP
NC
IO26
SVN
IO18
IO35
IO19
IO33
IO23
IO34
IO5
TMS
3V3
NC1
TCK
SD2
SD3
CMD
GND1
TXD
IO27
RXD
IO25
IO22
IO32
IO21
TDI
IO17
IO4
IO16
IO0
GND2
IO2
VCC
SD1
TD0
CLK
SD0
KEY
IN1
IN2
IN4
IN3
IL1
IL2
IH1
IH2
GREEN
RED
CH1
CH2
SCL
CH3
SDA
CH4
DH
CH5
CH6
+5V
X3-1
X3-2
X3-3
X4-1
X4-2
X4-3
X5-1
X5-2
X5-3
X6-1
X6-2
X6-3
VCC
R12
10
LED2
OP1
AQY211EHA
COMUN
X8-1
R13
LED3
OP2
X8-2
R17
LED5
OP3
X8-3
R18
LED6
OP4
X8-4
AC2
X8-5
J1
J5MM
AC1
X8-6
T1
Si4134DY
R14
100
R15
470
LED4
X8-8
T2
R20
R21
LED7
DHT11
DATA
R3
10K
R7
R8
R9
R10
R11
22K
S1
S2
S3
S4
S5
C9
100nF
SV1
DS1
OLED
128x64
X1-2
AK550/2
D1
R1
IL1
X1-1
D2
R2
IL2
X7-1
+12V
X7-3
6K8
R5
IH1
D3
BZX584C3.0
X7-2
R6
IH2
D4
X8-9
X8-7
U1
CC5V-T1A
C7
15pF
OSCI
OSCO
VBAT
VSS
VDD
INT1
SCL
SDA
INT4
PCF8523T
R16
C8
BAT-HLD-001
BT1
N1
P1*2
H1
MPAD_3.0
H2
H3
R19
LED8
L-937EGW
X2-1
X2-2
F1
B1
DB201S
R4
LED1
C1
100nF
C2
22uF
C3
IC2
7805DT
VI
VO
C4
C5
LD117AS33TR
IN
OUT
ADJ
IC3
C6
ReGo 4
TITLE: ReGo_4
Document Number:
REV:
000
Date: 08/12/2022 14:07:02
Sheet: 1/1