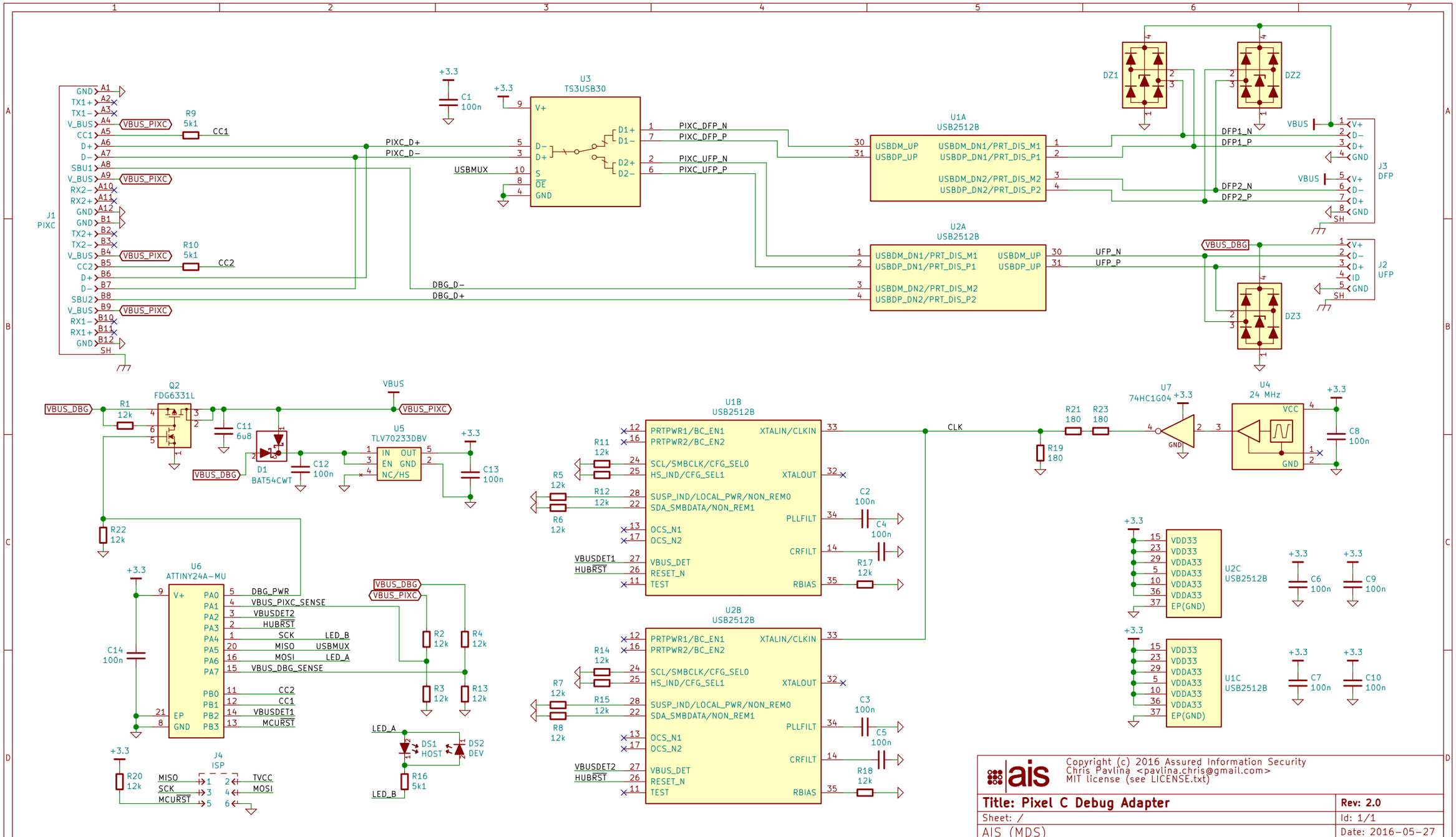

Copyright (c) 2016 Assured Information Security
Chris Pavlina <pavlina.chris@gmail.com>
MIT license (see LICENSE.txt)

Title: Pixel C Debug Adapter	**Rev: 2.0**
Sheet: /	Id: 1/1
AIS (MDS)	Date: 2016-05-27