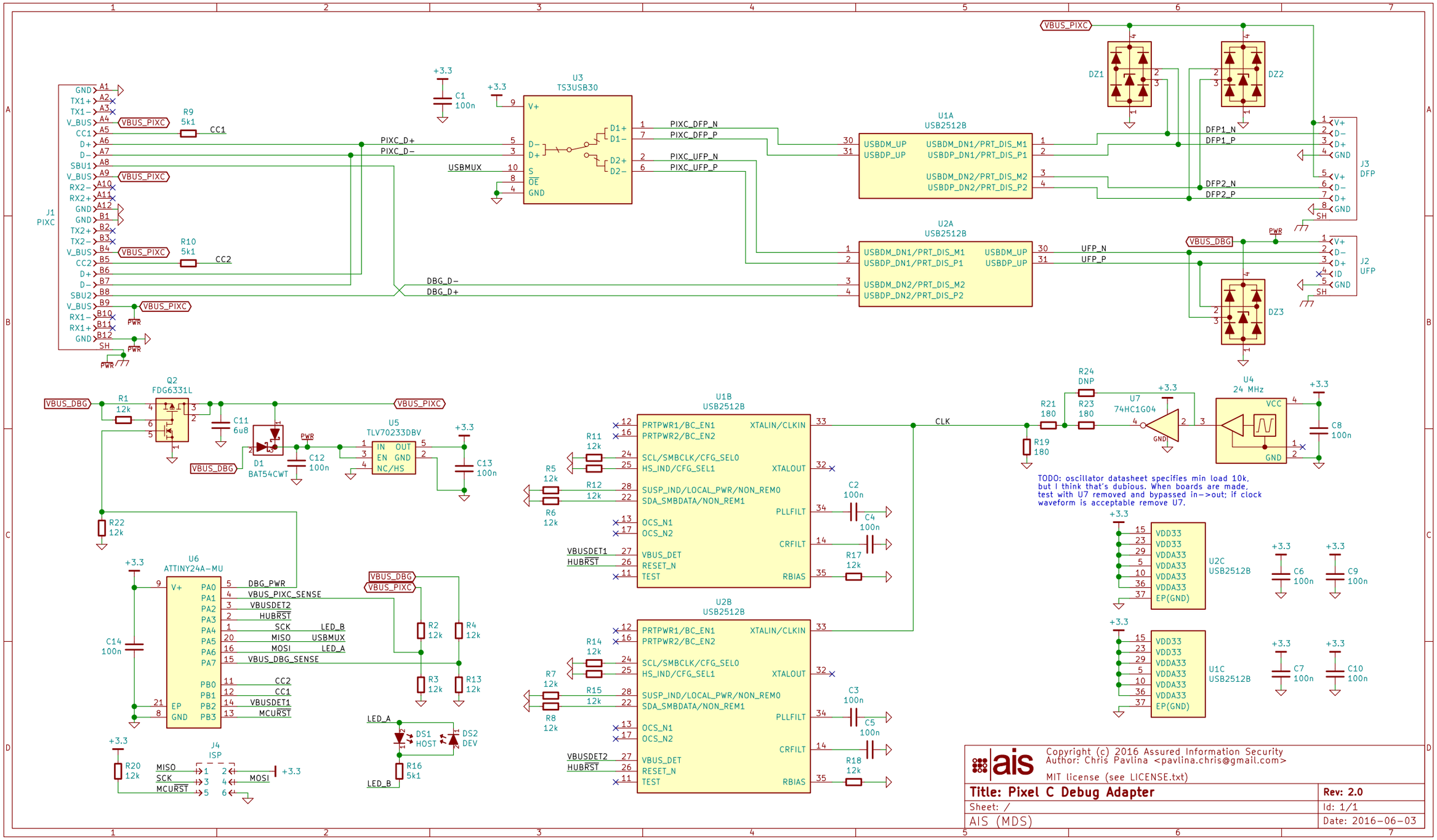
J1 PIXC
GND A1
TX1+ A2
TX1− A3
V_BUS A4
CC1 A5
D+ A6
D− A7
SBU1 A8
V_BUS A9
RX2− A10
RX2+ A11
GND A12
GND B1
TX2+ B2
TX2− B3
V_BUS B4
CC2 B5
D+ B6
D− B7
SBU2 B8
V_BUS B9
RX1− B10
RX1+ B11
GND B12
SH
VBUS_PIXC
R9 5k1
CC1
R10 5k1
CC2
PWR
+3.3
C1 100n
U3 TS3USB30
V+
D− D+ S OE GND
D1+ D1− D2+ D2−
USBMUX
PIXC_D+
PIXC_D−
PIXC_DFP_N
PIXC_DFP_P
PIXC_UFP_N
PIXC_UFP_P
DBG_D−
DBG_D+
U1A USB2512B
USBDM_UP USBDP_UP
USBDM_DN1/PRT_DIS_M1 USBDP_DN1/PRT_DIS_P1
USBDM_DN2/PRT_DIS_M2 USBDP_DN2/PRT_DIS_P2
U2A USB2512B
DZ1 DZ2 DZ3
DFP1_N DFP1_P DFP2_N DFP2_P
J3 DFP
J2 UFP
VBUS_DBG
UFP_N UFP_P
Q2 FDG6331L
R1 12k
C11 6u8
D1 BAT54CWT
C12 100n
U5 TLV70233DBV
IN OUT EN GND NC/HS
C13 100n
R22 12k
U6 ATTINY24A−MU
PA0 PA1 PA2 PA3 PA4 PA5 PA6 PA7 PB0 PB1 PB2 PB3 EP GND
DBG_PWR
VBUS_PIXC_SENSE
VBUSDET2
HUBRST
SCK LED_B
MISO USBMUX
MOSI LED_A
VBUS_DBG_SENSE
CC2
CC1
VBUSDET1
MCURST
C14 100n
R2 12k R3 12k R4 12k R13 12k
R20 12k
J4 ISP
MISO SCK MCURST MOSI
LED_A LED_B
DS1 HOST DS2 DEV
R16 5k1
U1B USB2512B
PRTPWR1/BC_EN1 PRTPWR2/BC_EN2
SCL/SMBCLK/CFG_SEL0 HS_IND/CFG_SEL1
SUSP_IND/LOCAL_PWR/NON_REM0 SDA_SMBDATA/NON_REM1
OCS_N1 OCS_N2
VBUS_DET RESET_N TEST
XTALIN/CLKIN XTALOUT PLLFILT CRFILT RBIAS
R11 12k R5 12k R12 12k R6 12k
C2 100n C4 100n R17 12k
U2B USB2512B
R14 12k R7 12k R15 12k R8 12k
C3 100n C5 100n R18 12k
CLK
R21 180 R19 180 R24 DNP R23 180
U7 74HC1G04
U4 24 MHz
VCC GND
C8 100n
TODO: oscillator datasheet specifies min load 10k, but I think that's dubious. When boards are made, test with U7 removed and bypassed in−>out; if clock waveform is acceptable remove U7.
U2C USB2512B
U1C USB2512B
VDD33 VDDA33 EP(GND)
C6 100n C9 100n C7 100n C10 100n
ais
Copyright (c) 2016 Assured Information Security
Author: Chris Pavlina <pavlina.chris@gmail.com>
MIT license (see LICENSE.txt)
Title: Pixel C Debug Adapter
Rev: 2.0
Sheet: /
Id: 1/1
AIS (MDS)
Date: 2016−06−03