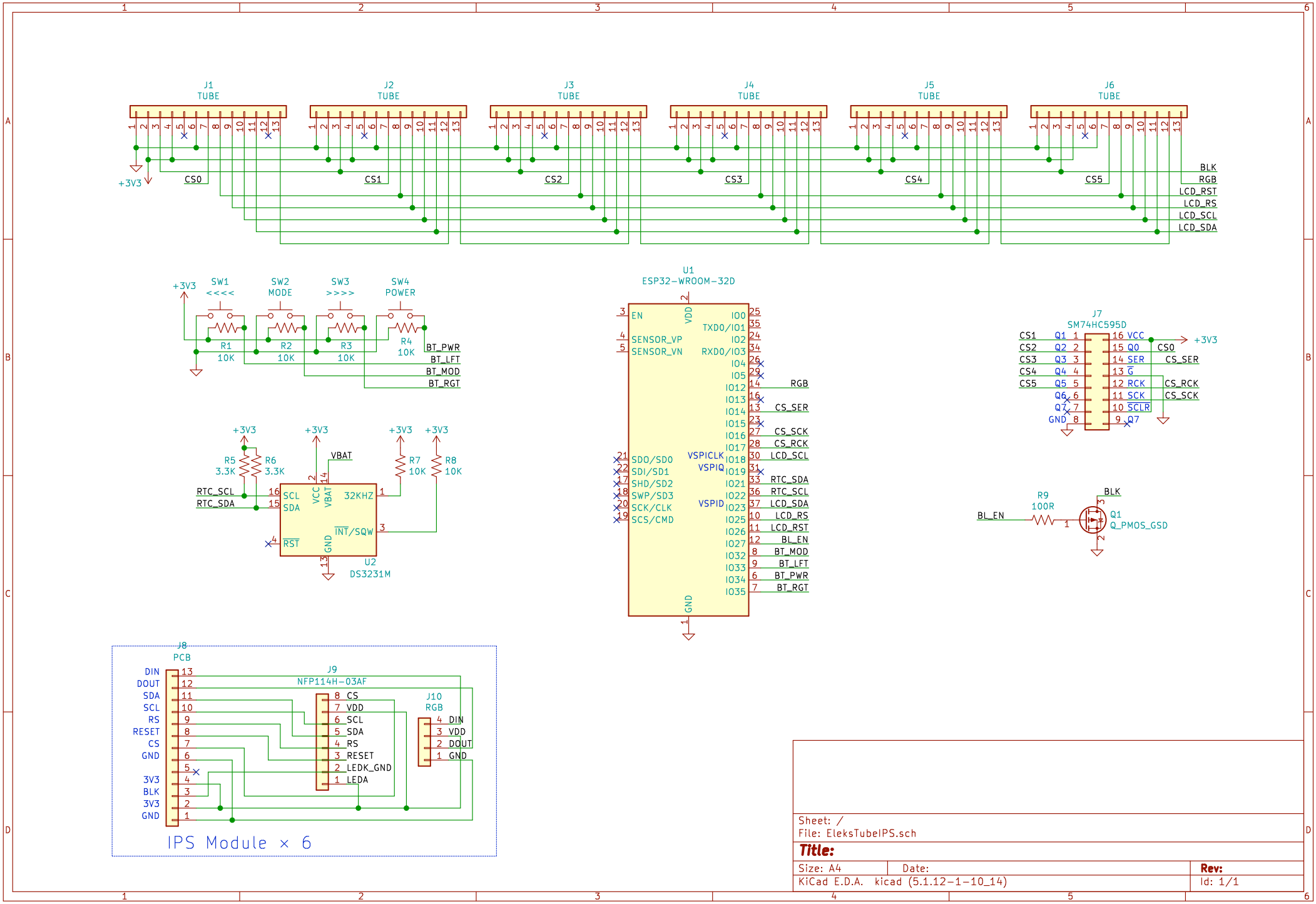

Sheet: /
File: EleksTubeIPS.sch

Title:

Size: A4 | Date: | **Rev:**

KiCad E.D.A. kicad (5.1.12-1-10_14) | Id: 1/1