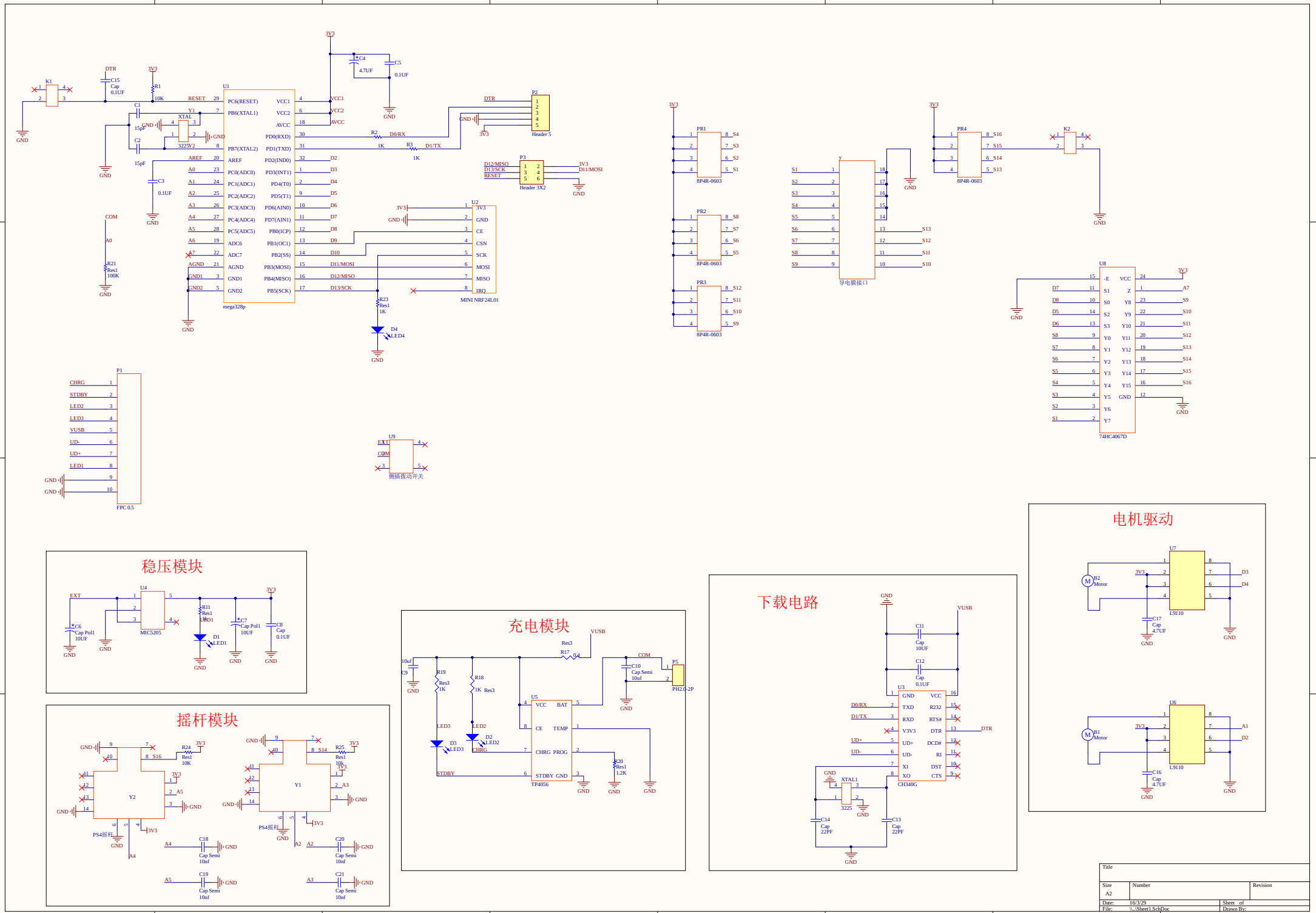

Title		
Size A2	Number	Revision
Date: 16/3/29		Sheet of
File: \\...\Sheet1.SchDoc		Drawn By: