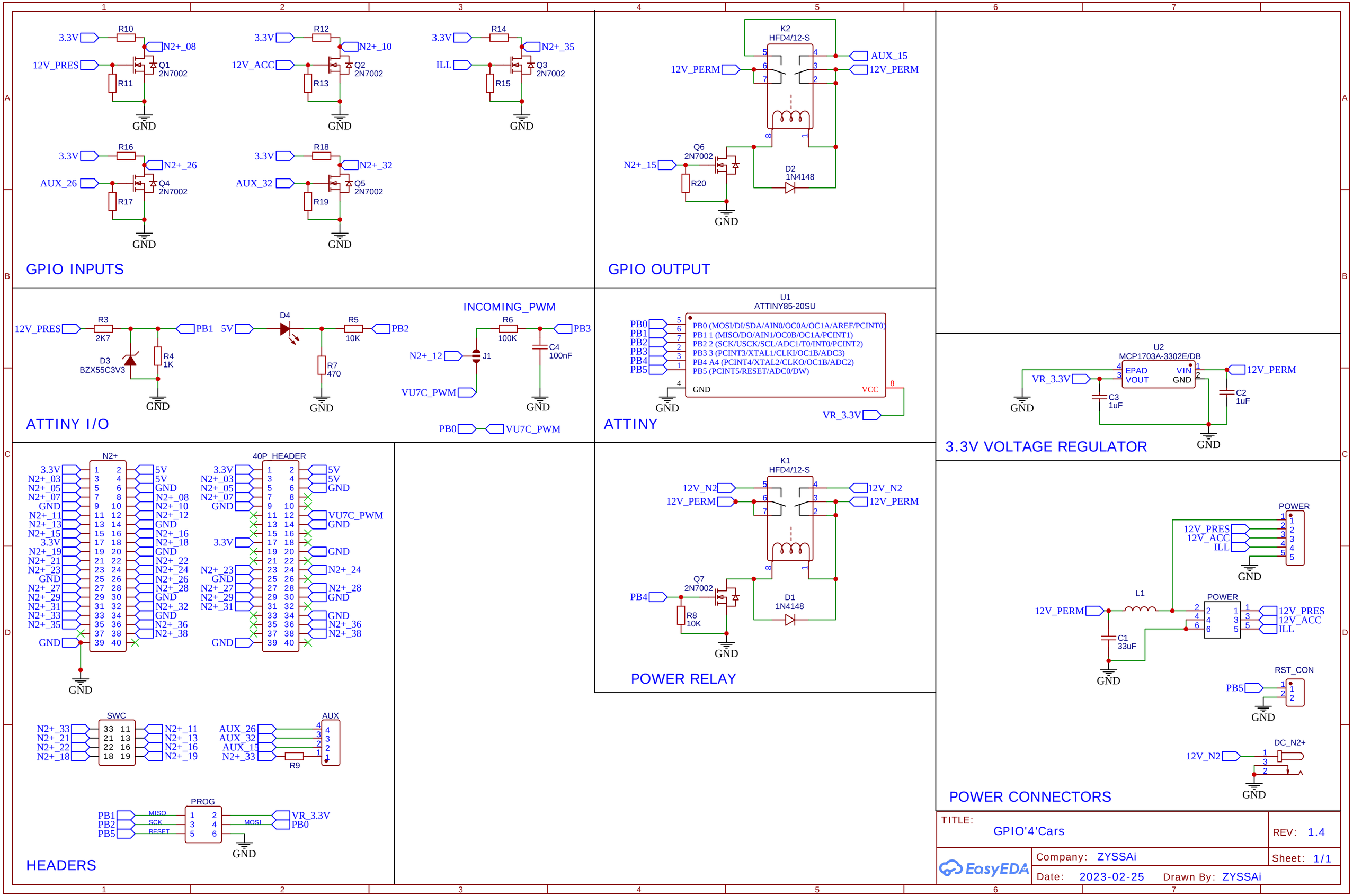

TITLE: GPIO'4'Cars

REV: 1.4

Company: ZYSSAi

Sheet: 1/1

Date: 2023-02-25

Drawn By: ZYSSAi