# STM32F103 Demo PCB

## Power Supply

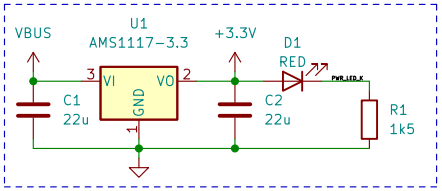


VBUS from USB connector (Nom. +5V) Min. 22uF inp./outp. caps

## Microcontroller (and USB)

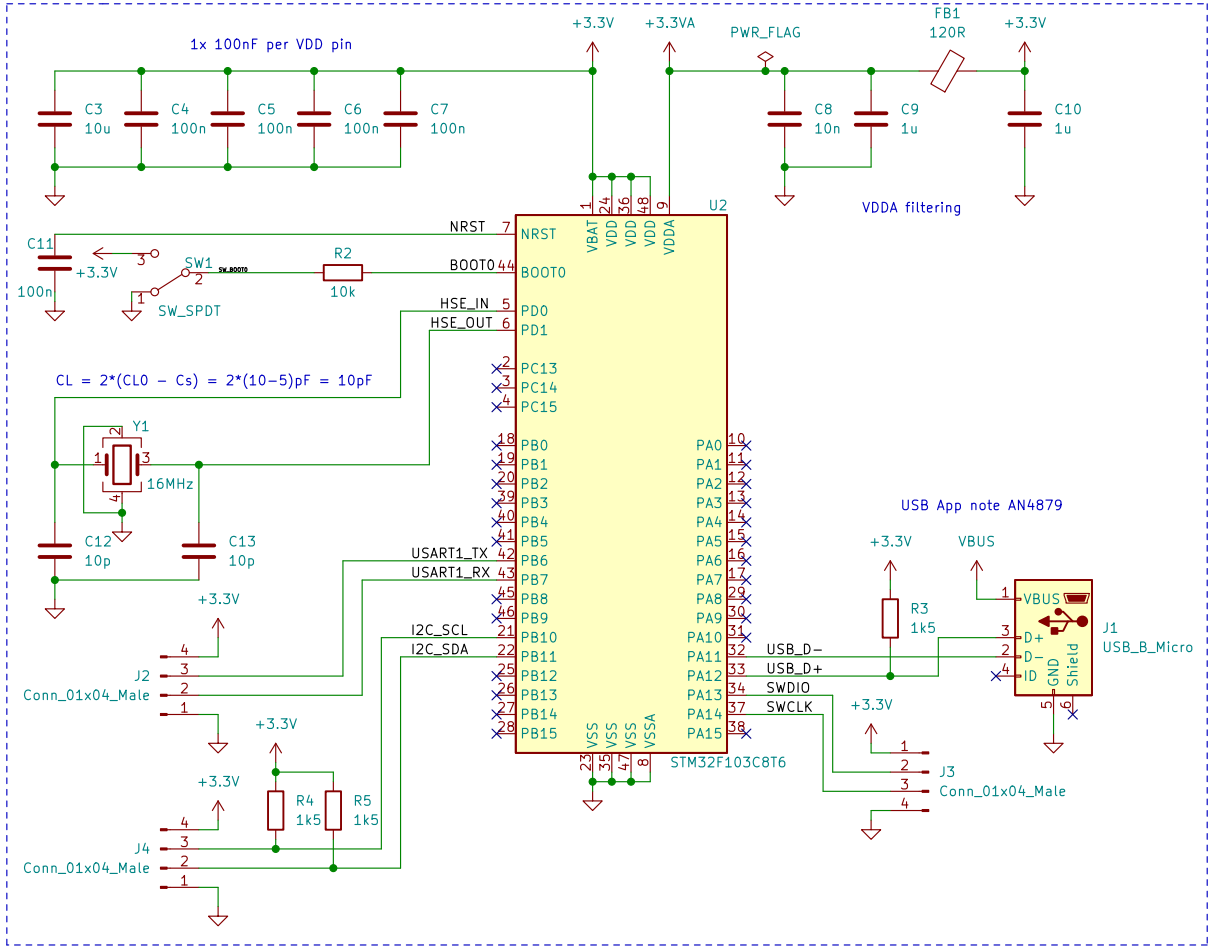


Pin-out using STM32CubeIDE

| | | |
|---|---|---|
| Ach. Fachturrohman | | |
| Sheet: / | | |
| File: stm32.kicad_sch | | |
| **Title: STM32F103 Demo PCB** | | |
| Size: A4 | Date: 2022-08-06 | Rev: 1.0 |
| KiCad E.D.A. kicad (6.0.2) | | Id: 1/1 |