UNION SWITCH & SIGNAL

Union Switch & Signal Inc., an Ansaldo Signal company
1000 Technology Drive, Pittsburgh, PA 15219 • 645 Russell Street, Batesburg, SC 29006

SM 6800K

MICROLOK II Network Protocol and Networking Hardware

- Installation
- Operation
- Maintenance

Copyright © 2004
Union Switch & Signal Inc.

SM 6800K, Original, March 2004

MASTER COPY

Proprietary Notice

This document and its contents are the property of Union Switch & Signal Inc. (hereinafter US&S). This document has been furnished to you on the following conditions: no right or license under any patents or any other proprietary right in respect of this document or its content is given or waived in supplying this document. This document or its content are not to be used or treated in any manner inconsistent with the rights of US&S, or to its detriment, and are not to be copied, reproduced, disclosed to others, or disposed of except with the prior written consent of US&S.

Important Notice

US&S constantly strives to improve our products and keep our customers apprised of changes in technology. Following the recommendations contained in the attached service manual will provide our customers with optimum operational reliability. The data contained herein purports solely to describe the product, and does not create any warranties.

Within the scope of the attached manual, it is impossible to take into account every eventuality that may arise with technical equipment in service. Please consult your local US&S Account Executive in the event of any irregularities with our product.

We expressly disclaim liability resulting from any improper handling or use of our equipment, even if these instructions contain no specific indication in this respect. We strongly recommend that only approved US&S spare parts be used as replacements.

MASTER COPY

Revision History

Rev.	Date	Nature of Revision
Original	March 2004	Original Issue

MASTER COPY

Table of Contents

1. Introduction 1-1
1.1. General 1-1
1.2. MICROLOK II Network Protocol 1-2
1.3. Hub 1-2
1.4. Network Interface Adapter 1-2
1.5. Connection Options 1-2
2. Hub 2-1
2.1. Description Overview 2-1
2.2. Physical Layout and Installation 2-1
2.2.1. Operating Parameters 2-2
2.2.2. Cable Connections 2-2
2.3. Cable Recommendations 2-5
2.3.1. RS-485 Cables 2-5
2.3.2. RS-423 and RS-232 Cables 2-6
2.4. Operation 2-6
3. Network Interface Adapter (NIA) 3-1
3.1. Description Overview 3-1
3.2. Operating Parameters 3-1
3.3. Physical Layout and Installation 3-1
3.3.1. NIA Connections 3-2
3.3.2. User Interface 3-3
3.4. NIA Configuration 3-5
3.4.1. Create Hosts File 3-6
3.4.2. Serial Link 3-6
3.4.3. TCP/IP Ethernet Link 3-7
3.4.4. NIA Configuration 3-8
3.4.5. Configuration Complete 3-10
4. Executive Revision Changes 4-1
4.1. Application Logic Changes – Network Protocol 4-1
4.1.1. Link and Port Definition 4-1
4.1.2. MII.PEER Station Address Definitions 4-2
4.2. Application Logic Changes – Version Strings 4-5
4.3. Application Logic Changes – New System Bits 4-6
4.4. Application Logic Changes – Unit Configuration 4-6
4.4.1. Logic Timeout Configuration 4-6
4.4.2. Delay Reset Configuration 4-7
4.4.3. Event Threshold 4-7
4.5. Sample Application 4-8
5. Network Protocol Maintenance Tool 5-1
5.1. System Information 5-1
5.2. Board Information 5-3
5.3. Protocol Link Statistics 5-4
5.4. Serial Message Monitor 5-6
5.4.1. MSG STATUS 5-7
5.4.2. DEST ADDR and SRC ADDR 5-7
5.4.3. MSG TYPE 5-7
5.4.4. SNDMSN – RCVMSN 5-7
5.4.5. Date and Time Stamp 5-7
5.4.6. Actual Bytes 5-7
5.5. Power Calculation View 5-10
5.6. System Configuration 5-11
6. Parts List 6-1

MASTER COPY

List of Figures

Figure 1-1 - Fully Configured MICROLOK II Communication System 1-1
Figure 1-2 - System Configuration – Local Hub Network with No Connection to an External Network. 1-3
Figure 1-3 - System Configuration – Local Hub Network Connected to an External Network via an NIA. 1-3
Figure 1-4 - System Configuration - Single MICROLOK II Unit Connected to an External Network 1-4
Figure 1-5 - System Configuration – Two MICROLOK II Units Connected to Each Other 1-4
Figure 2-1 - Hub Front View 2-1
Figure 2-2 - Hub Rear View 2-1
Figure 2-3 - Interfacing MICROLOK II with the Hub 2-3
Figure 2-4 - Expansion Channel Pin Assignments 2-5
Figure 2-5 - Typical Hub/MICROLOK II Signal Flow 2-7
Figure 2-6 - Hub PCB Layout 2-8
Figure 2-7 - Detailed View of SW2 2-9
Figure 2-8 - Detailed View of SW4 2-9
Figure 3-1 - NIA External View 3-2
Figure 3-2 - MICROLOK II Network Connecting Cable - NIA connecting to Hub 3-5
Figure 5-1 - Main Launch Menu for the Maintenance Tool 5-1
Figure 5-2 - System Information View 5-2
Figure 5-3 - Typical Board Information Menu 5-3
Figure 5-4 - Protocol Link Statistics Screen 5-4
Figure 5-5 - Station Statistics Screen 5-5
Figure 5-6 - Serial Link Monitor View 5-6
Figure 5-7 - Power Calculation View 5-10
Figure 5-8 - System Configuration Launch Screen 5-11
Figure 5-9 - M II Network 1 Screen 5-12
Figure 5-10 - Link Station Information 5-13
Figure 5-11 - Station Information Window Indicating the First Station Has Been Visited 5-13
Figure 5-12 - Station Information Window Indicating the First Station Is Enabled and Data Has Changed and the Second Station Is Disabled. 5-14
Figure 5-13 - User Reminder Message 5-14
Figure 5-14 - Station Configuration Parameters 5-15

List of Tables

Table 2-1 - Signal/Pin Assignments for 9-Pin DB Style Connectors 2-3
Table 2-2 - MICRLOK II to Hub Connections 2-4
Table 2-3 - Signal/Pin Assignments for 25-Pin DB Style Connectors 2-4
Table 2-4 - SW2 (Switches 1-7) Dip Switch Settings for Timeout Values 2-7
Table 3-1 - Ethernet Cross-Connected Cable Pin Out 3-3
Table 3-2 - Description of the NIA LEDs 3-4
Table 3-3 - NIA to Hub Connections 3-5
Table 3-4 - NIA to MICROLOK II Connections 3-5
Table 3-5 - Configuration Parameters 3-9
Table 4-1 - MII.PEER Configuration Parameters* 4-2
Table 4-2 - MII PEER Station Configuration Parameters 4-4
Table 4-3 - System Boolean Bits 4-6
Table 6-1 - MICROLOK II Network Protocol System Components 6-1

MASTER COPY

1. Introduction

1.1. General

This manual covers the MICROLOK II Network Protocol and the hardware necessary to implement that protocol. There are three parts to this implementation: the Protocol software, the Hub, and the Network Interface Adapter (NIA).

The MICROLOK II Network Protocol allows a higher throughput between co-located MICROLOK II units and enables the units to communicate over an existing network. MICROLOK II units can communicate directly with each other, using the Hub, and/or the NIA.

Figure 1-1 shows a fully expanded MICROLOK II Networking Scheme.

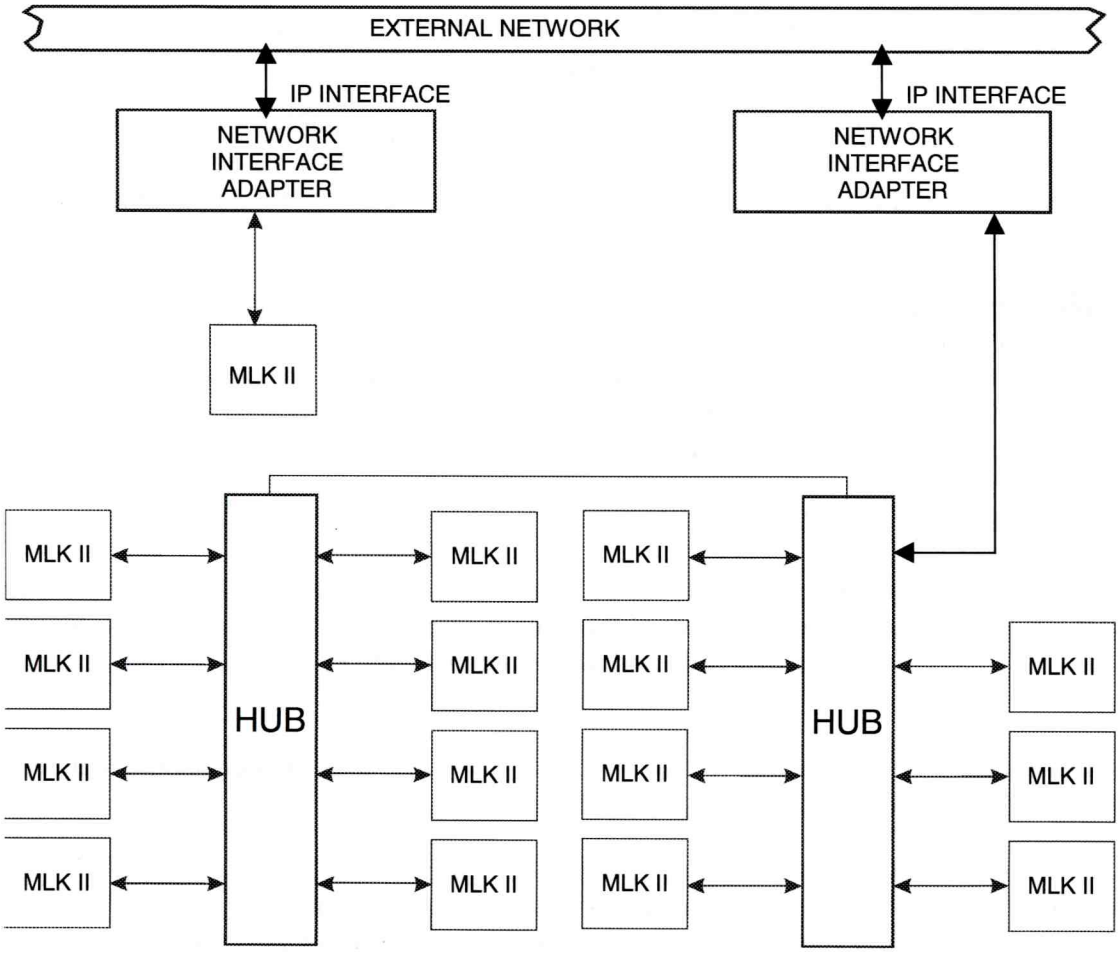

Figure 1-1 - Fully Configured MICROLOK II Communication System

MASTER COPY

1.2. MICROLOK II Network Protocol

The MICROLOK II Network Protocol is a packet-based protocol and is used to transmit messages from one MICROLOK II unit to another MICROLOK II unit either directly, through a hub, or through the NIA to a network. The protocol is capable of transmitting both vital and non-vital MICROLOK II application variables.

This protocol is a peer-to-peer protocol that allows any connected MICROLOK II unit to initiate a message sequence to another MICROLOK II unit at any time. The protocol incorporates a delayed acknowledgement to allow for situations where other data transmissions may occur between a message and its acknowledge.

1.3. Hub

The US&S Hub (PN N16906701) connects multiple co-located MICROLOK II units creating a local area network (LAN) for communications between those units. The Hub provides electrical isolation between the devices connected to it. The Hub utilizes an RS-423 interface (configurable RS-232, RS-485, RS-423) and can be connected to any of the ports on the MICROLOK II controller board.

The Hub functions as a media access layer for connecting multiple units in a single location. The Hub will resolve contention issues when multiple units attempt to transmit at the same time. It supports a maximum of eight local connections and can be connected to a second Hub to include an additional eight ports on the LAN, for a total of 16 MICROLOK II units on a single LAN.

1.4. Network Interface Adapter

Functioning as the link between the network and the Hub, or between an external network and a separate MICROLOK II unit, the Network Interface Adapter (NIA) (PN N16909501) can accept a message and transport it on TCP/IP networks.

1.5. Connection Options

The elements of the new network system can be specifically configured to meet any requirement for MICROLOK II communication. Using all of the system elements, it is possible to have 16 MICROLOK II units connected to a LAN and to communicate directly with each other (through the Hub).

If a connection to an external network is not required, (i.e., LAN only; no connection to an external network) the NIA can be eliminated (Figure 1-2).

The LAN can be connected to an external network (through the NIA) allowing the MICROLOK II units to communicate with other units that are connected to the network with an NIA (Figure 1-3). If an NIA is used in the LAN configuration, the NIA will be used in place of one of the MICROLOK II units. This will allow for 7 MICROLOK II units and the NIA, when using a single Hub, or 15 MICROLOK II units and one NIA to be connected with the expanded two Hub capability.

MASTER COPY

NOTE

The term HTG used in the figures is Hub Transmit Grant. This signal is connected to the DCD input on MICROLOK II CPU boards and to the CTS input on the NIA serial link connections.

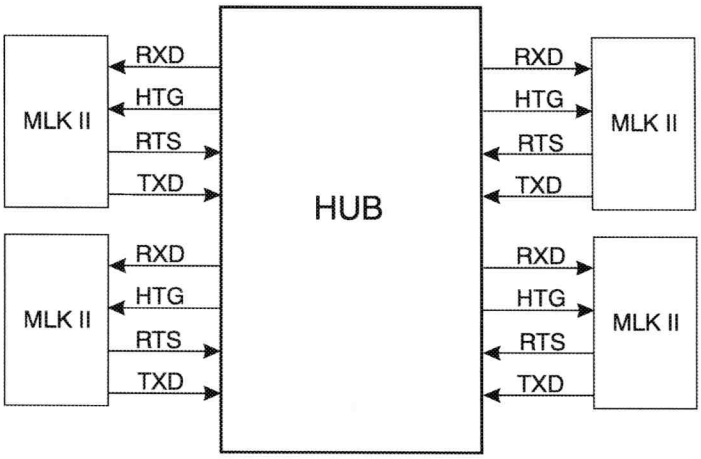

Figure 1-2 - System Configuration – Local Hub Network with No Connection to an External Network.

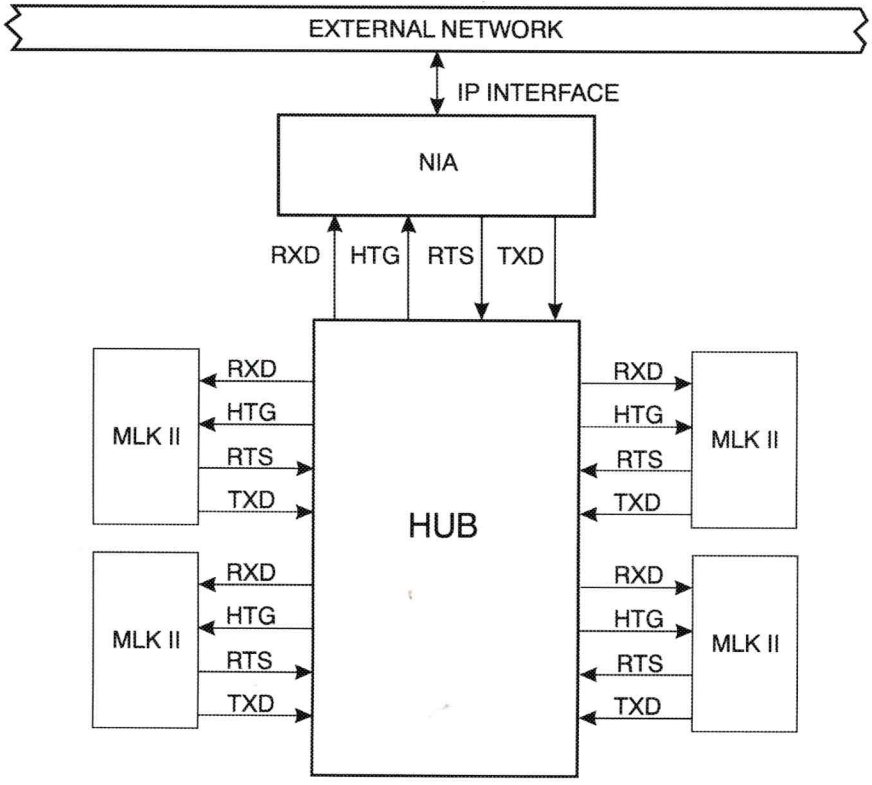

Figure 1-3 - System Configuration – Local Hub Network Connected to an External Network via an NIA.

MASTER COPY

If a single MICROLOK II unit is to be connected to an external network, the Hub may be eliminated and only the NIA is required. This configuration needs to include a loop-back of the RTS signal to the HTG for each unit (Figure 1-4).

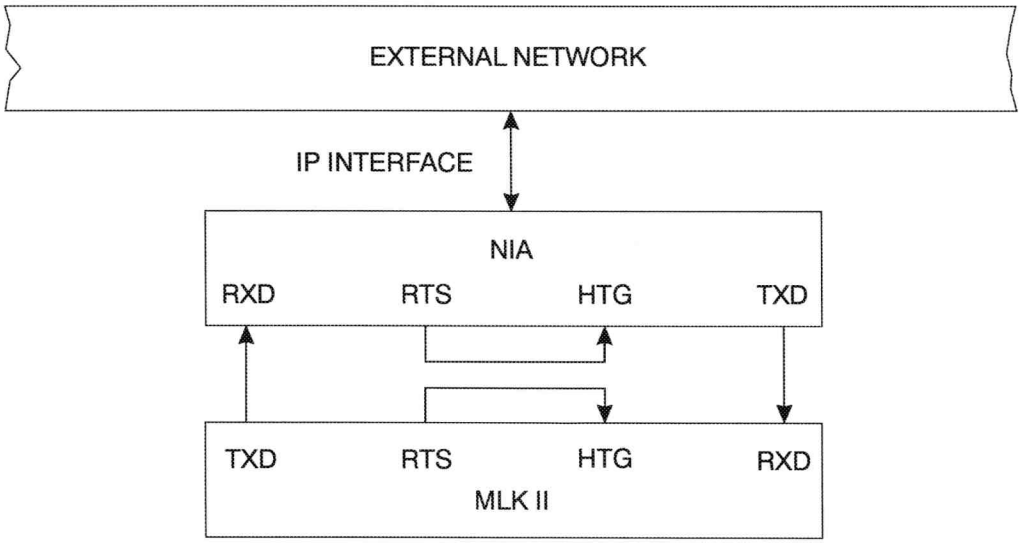

Figure 1-4 - System Configuration - Single MICROLOK II Unit Connected to an External Network.

If only two MICROLOK II units are to be connected, the Hub and NIA may be eliminated and the units may be directly connected. In this case, as above, the RTS signal should be connected to the HTG (Figure 1-5).

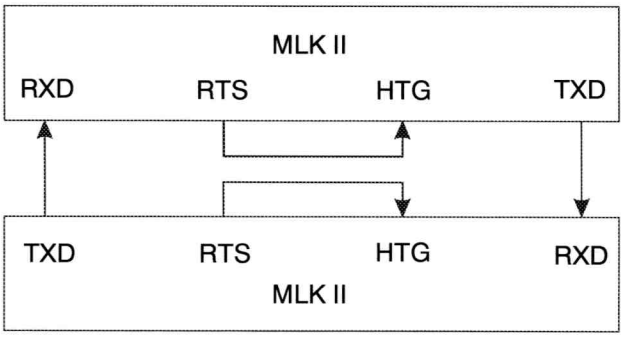

Figure 1-5 - System Configuration – Two MICROLOK II Units Connected to Each Other

MASTER COPY

2. Hub

2.1. Description Overview

The Network Hub allows up to eight co-located MICROLOK II units to connect to it and communicate through it. Each of the eight supported channels is configurable to be compatible with each of the serial communications standards available on MICROLOK II CPU boards, either RS-232, RS-423, or RS-485. The Hub services a single request from one of the possible eight MICROLOK II units connected to it and broadcasts it to the other channels simultaneously.

The Hub also includes a single expansion port that will allow two Hubs to be interconnected to allow up to 16 co-located MICROLOK II units to communicate using the MICROLOK II Network protocol. When an expansion Hub is connected, the first Hub will service a request from one of the eight possible MICROLOK II units connected to it or the expansion Hub. The first Hub will then broadcast the message to each of the remaining channels connected to it and to all channels connected to the expansion Hub, when the expansion Hub grants it access.

The Hub is mountable in a standard 19-inch communications rack and it occupies a height of 1U (1.79 inches). The front panel will indicate the request and grant status of each channel including the expansion port, as well as show the received and transmitted data activity.

2.2. Physical Layout and Installation

A single printed circuit board is contained within a standard 1U enclosure. The mounting tabs on each side provide two holes, each spaced in accordance with the TIA/EIA-310-C standard for equipment mounted in 19-inch communications racks. The depth of the unit is 9.25 inches. Figure 2-1 shows the front of the Hub. Figure 2-2 shows the rear of the Hub where all communications and power connections are made.

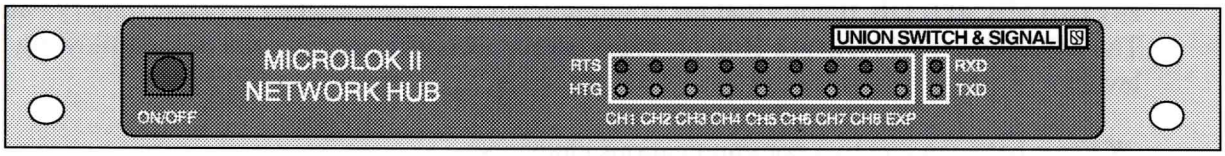

Figure 2-1 - Hub Front View

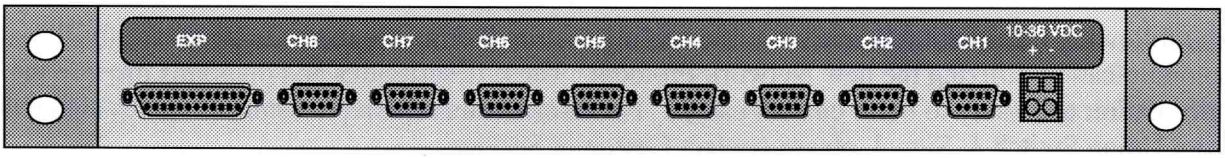

Figure 2-2 - Hub Rear View

MASTER COPY

Power is connected to the Hub through a WAGO style CAGE clamp connector. It is capable of accepting 14AWG to 28AWG wire. 16AWG wire is recommended as a minimum wire size for power connections.

With power applied, the unit is turned ON or OFF with the switch on the front of the unit. The unit is powered ON when the switch is illuminated RED, and is OFF when the switch is dark.

2.2.1. Operating Parameters

Battery Input Voltage

10 Vdc to 36 Vdc with a ripple of 0.5Vp-p (max.)

Power Consumption

Approximately 20W

Built-In Suppression

Transient voltage type

Operating Temperature

-40C to +70C

Humidity

0% to 95% non-condensing

Isolation

The MICROLOK II service manual 6800B indicates that the signal common for each of the serial ports is directly connected to battery common. Hence isolation is recommended between any two MICROLOK II units that are communicating and powered by separate battery banks. The MICROLOK II Network Hub provides isolation between serial ports to the following levels:

2KVrms between any two communications channels

2KVrms between battery and any single communications channel

2.2.2. Cable Connections

The following information is related to the cabling required to interconnect the hardware for the serial communication utilizing the new Network Protocol. These descriptions and diagrams provide the information necessary to build custom cables. For information relating to standard cables available from Union Switch & Signal, please contact Customer Service.

Each channel on the Hub is comprised of drivers and receivers based on the RS-423 standard. This standard employs differential receivers and single ended drivers. Refer to Figure 2-3 for the connections to a MICROLOK II unit for each configuration.

MASTER COPY

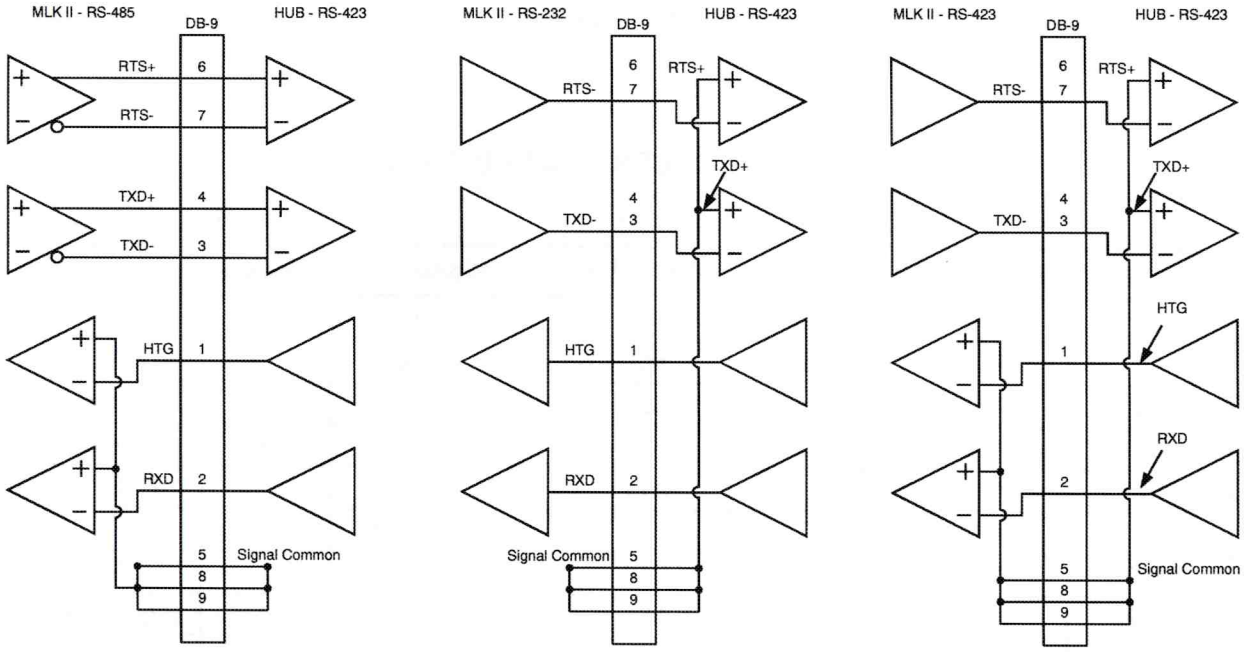

Figure 2-3 - Interfacing MICROLOK II with the Hub

When the Hub interfaces to RS-232 or RS-423 from a MICROLOK II unit the RTS+ and TXD+ signals are connected to signal common through the dip switch settings. Pins 8 and 9 in the DB-9 connectors are connected to signal common on the Hub end and can be used to connect the positive sides of the receivers in the first and third configurations shown in Figure 2-3. Pin 5 in the DB-9 connector is the signal common carried through between the MICROLOK II and the Hub. Note the pin assignments indicated in Figure 2-3 are on the Hub end.

Each channel is connected using 9-pin DB style connectors with plastic shells. The rear panel is punched for each connector to extend through the panel and expose the female screw locks as well for securing connections. The pin assignments for the 9-pin DB style connectors are shown in Table 2-1.

Table 2-1 - Signal/Pin Assignments for 9-Pin DB Style Connectors

Pin No.	Signal
1	Hub Transmit Grant (HTG) (Output)
2	Receive Data (RXD) (Output)
3	Transmit Data- (TXD-) (Input)
4	Transmit Data+ (TXD+) (Input)
5	Signal Common
6	Request to Send+ (RTS+) (Input)
7	Request to Send- (RTS-) (Input)
8	Signal Common
9	Signal Common

MASTER COPY

Signal common is connected on pins 8 and 9 and provides an option for connecting the "plus" side of the MICROLOK II receivers to common when using the MICROLOK II RS-485 ports. Refer to Table 2-2 for MICROLOK II to Hub connections.

Table 2-2 - MICRLOK II to Hub Connections

MICROLOK II (Harting)					Hub (DB-9)	
Port 1 Pin	Port 2 Pin	Port 3 Pin	Port 4 Pin	Signal	Pin No.	Signal
A2	A16	E16	C20	TXD- (Output)	3	TXD- (Input)
A4	A18	NC	NC	TXD+ (Output)	4	TXD+ (Input)
C6	A24	E14	C22	RXD- (Output)	2	RXD (Output)
C8	A26	NC	NC	RXD+	8	Signal Common
E2	A20	C14	A14	RTS- (Output)	7	RTS- (Input)
E4	A22	NC	NC	RTS+ (Output)	6	RTS+ (Input)
C10	A28	E10	C16	DCD- (Input)	1	HTG (Output)
C12	A30	NC	NC	RTS+ (Output))	9	Signal Common
NC	NC	E18	NC	RXREF	9	Signal Common
C18	C18	E22	E22	Signal Common	5	Signal Common

The expansion port connection is made through the 25-pin DB style connector. The expansion port is a custom port that accommodates the necessary handshake signals between two connected hubs. The pin assignments for this connector are shown in Table 2-3.

Table 2-3 - Signal/Pin Assignments for 25-Pin DB Style Connectors

Pin No.	Signal	Pin No.	Signal
1	Signal Common	14	NC
2	Transmit Data (Output)	15	NC
3	Receive Data (Input)	16	NC
4	Service Request (Output)	17	NC
5	Reserved	18	Expansion Present (Output)
6	Service Grant (Output)	19	NC
7	Signal Common	20	Service Grant (Input)
8	Service Request (Input)	21	Expansion Present (Input)
9	NC	22	Reserved
10	NC	23	NC
11	NC	24	Signal Common
12	NC	25	Signal Common
13	NC		

Extra signals are included to help with the processing of the expansion port. The Expansion Present [Output (pin 18)] and Expansion Present [Input (pin 21)] signals inform two connected Hubs that the

MASTER COPY

expansion is present. The Service Request [Output (pin 4)] is connected to the Service Request [Input (pin 8)]. This serves as the handshake connection for one Hub to request an expansion unit for service. If the expansion unit is idle, it will assert its Service Grant [Output (pin 6)] signal and the requesting Hub will receive it through the Service Grant [Input (pin 20)]; whereby, it will transmit to seven of its channels and to all eight of the expansion unit's channels.

Figure 2-4 shows the pin assignments for the expansion channel cable. This cable is custom and specific for connecting a Hub to another expansion Hub. Both connectors are standard DB-25 male style.

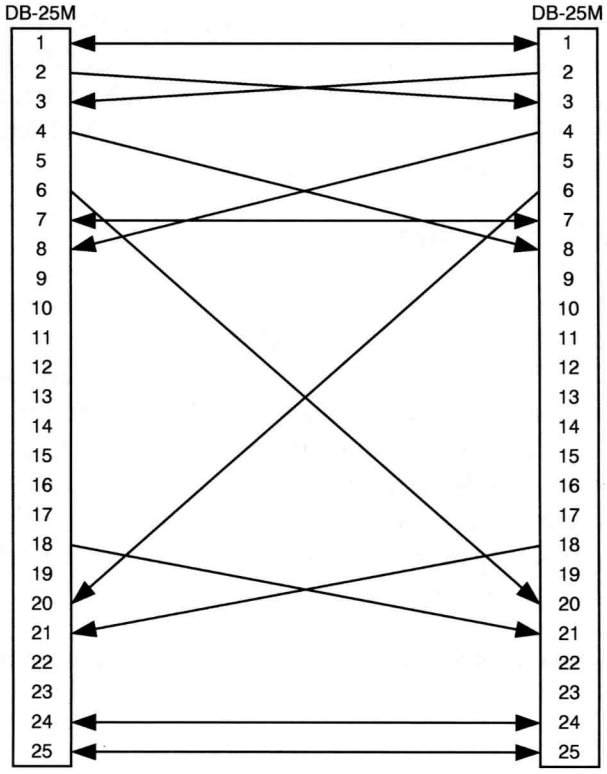

Figure 2-4 - Expansion Channel Pin Assignments

2.3. Cable Recommendations

Cables from a MICROLOK II unit, a MICROLOK II network Hub, or a MICROLOK II NIA should not be run outside of the house. If the cables do need to be run outside of the house, a modem should be used.

2.3.1. RS-485 Cables

MICROLOK II Serial Ports 1 and 2 are RS-485 ports. Each RS-485 port signal is transported by a twisted pair of wires labeled as XXX- and XXX+ (TXD- and TXD+, for example). In addition, the signal COMMONs for all ports on an RS-485 communication link must be connected together to

MASTER COPY

equalize the potential between signal commons for the connected units. Note that signal COMMON cannot be connected to a frame or earth ground as it is directly connected through the MICROLOK II power supply to negative vital battery. RS-485 ports should be interconnected using ONLY twisted pair cable with an over-all shield. For best performance, the interconnecting cables should not contain extra, unused pairs. Any unused pairs should be connected together at both ends of the cable and connected to signal COMMON for best noise immunity. If connected, the shield should be connected to a frame ground at one end of the cable only.

MICROLOK II units require that a 120-ohm, ½-watt, external load resistor be placed across the TXD and RTS transmitters and across the RXD and DCD receivers when using the RS-485 ports. However, when the MICROLOK II RS-485 port is connected to a MICROLOK II Network Hub no external resistors are required on the Hub end, and on the MICROLOK II end they are only required for the TXD and RTS outputs. Note that the DIP switches inside the Hub switch in the proper termination for that end of the link. And, because the outputs from the Hub to the MICROLOK II (RXD and HTG) utilize the RS-423 standard, the termination is not necessary.

2.3.2. RS-423 and RS-232 Cables

MICROLOK II Serial Port 3 can be either an RS-423 or RS-232 serial port, and MICROLOK II Serial Port 4 is an RS-232 port. RS-423/RS-232 ports should be interconnected using only multi-conductor cable with an over-all shield. The cable should not contain any twisted pairs. The serial port signal COMMONs should be connected using the conductors in the cable (NOT the shield). For best performance, interconnecting cables should not contain extra wires. Extra wires should be connected together and connected to signal COMMON at both ends for best noise immunity. Note that signal COMMON cannot be connected to a frame or earth ground as it is directly connected through the MICROLOK II power supply to negative vital battery. The cable shield should be connected to a frame ground at one end of the cable only.

RS-423 ports may be connected to RS-232 ports as indicated in Figure 2-3.

2.4. Operation

When a MICROLOK II unit asserts a Request to Send (RTS) signal to the Hub, the Hub asserts a return handshake signal called Hub Transmit Grant (HTG) when it is permissible for the MICROLOK II unit to transmit its message. This signals the requesting MICROLOK II unit that it may transmit. At the end of the message the MICROLOK II unit releases the RTS signal which in turn causes the Hub to deactivate the HTG.

If another unit is already transmitting when an RTS signal is generated, the Hub will delay the return HTG signal to the new unit until the first transmission is complete. If there are multiple pending RTS signals from different units, the Hub will rotate between the multiple requests, activating an HTG signal for each unit in turn. Typical signal flow between a Hub and a MICROLOK II unit is shown in Figure 2-5.

MASTER COPY

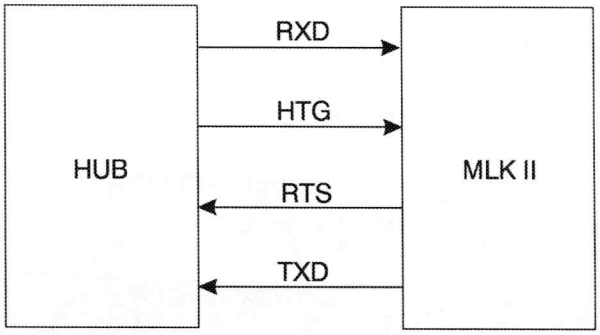

Figure 2-5 - Typical Hub/MICROLOK II Signal Flow

The Hub enforces a maximum time that any unit may transmit. When the time limit is reached, the Hub terminates the HTG to the transmitting unit and moves to the next unit with an active RTS signal, sending a HTG signal. This avoids the situation where a fault condition on one unit monopolizes the Hub, preventing other units from communicating.

If an RTS does not release and becomes stuck on, a programmable time-out will cause the Hub to ignore the RTS signal. The basic time-out interval is 25ms. A 7-bit binary programmable multiplier multiplies the basic interval time (25 ms) by a value between 1 and 127 inclusive (SW2 switches 1–7). For the location of SW2, refer to Figure 2-6; and for a more detailed view of SW2, refer to Figure 2-7. This allows flexible time-out periods that may be set from 25ms to 3.175 seconds in increments of 25ms. Refer to Table 2-4 for SW2 dip switch (switches 1-7) settings for sample timeout values. This time-out period defines the maximum amount of time a given unit may assert a request to the Hub and have the Hub service that channel while ignoring other requests. At the end of this time-out period the Hub will de-assert the HTG signal given to the channel being serviced. This action results in a truncated message if the message was not completed.

Table 2-4 - SW2 (Switches 1-7) Dip Switch Settings for Timeout Values

Timeout Interval	Switch 1	Switch 2	Switch 3	Switch 4	Switch 5	Switch 6	Switch 7
25 ms	ON	ON	ON	ON	ON	ON	OFF
50 ms	ON	ON	ON	ON	ON	OFF	ON
75 ms	ON	ON	ON	ON	ON	OFF	OFF
100 ms	ON	ON	ON	ON	OFF	ON	OFF
			. . .				
3 Sec.	OFF	OFF	OFF	OFF	ON	ON	ON
3.125 Sec.	OFF	OFF	OFF	OFF	OFF	ON	OFF
3.150 Sec.	OFF	OFF	OFF	OFF	OFF	OFF	ON
3.175 Sec.	OFF	OFF	OFF	OFF	OFF	OFF	OFF

MASTER COPY

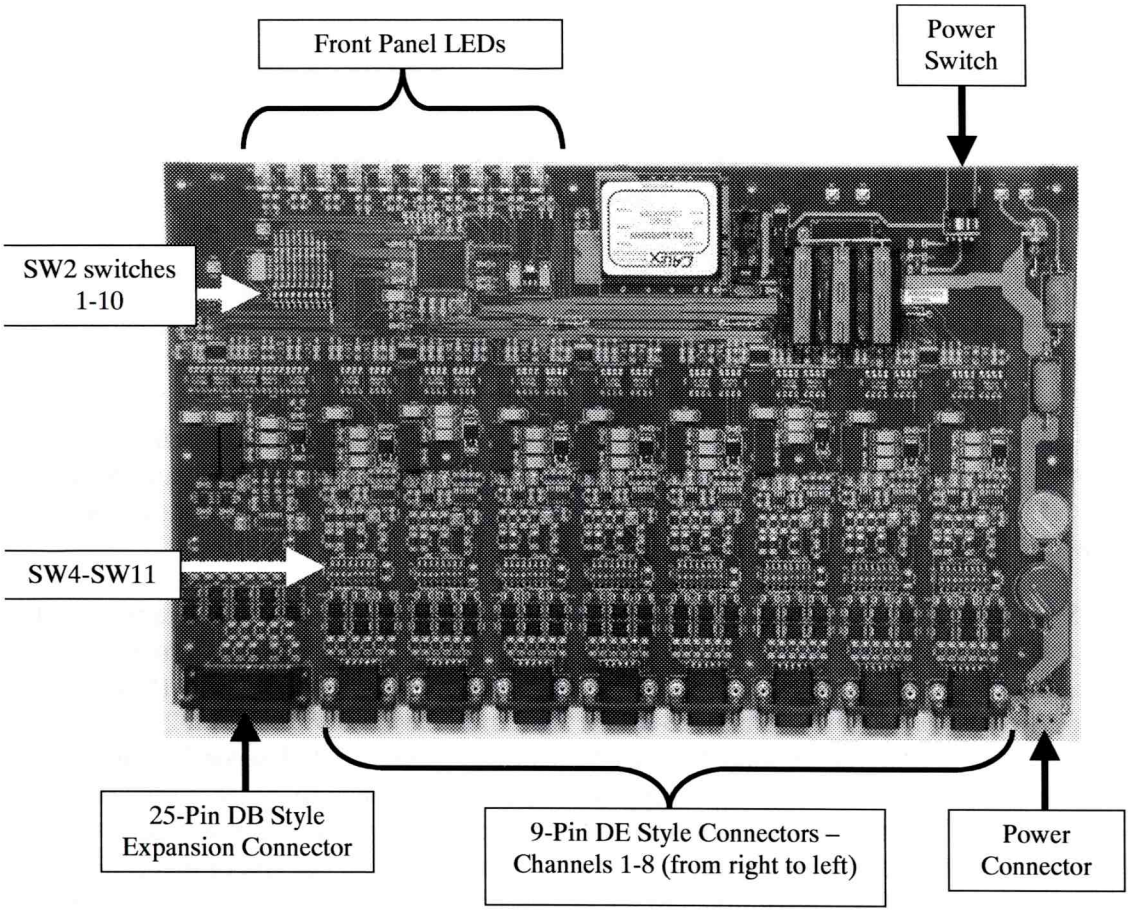

Figure 2-6 - Hub PCB Layout

If a message times out, all other units are given the opportunity to transmit before the offending unit is granted service again. If a unit times out, a counter is incremented that is associated with that specific unit. Two inputs (SW2, switches 8, 9) define how many time-out events (1 to 3) a unit can generate before it is declared to be in a "failed" state. If a unit is declared "failed," it will not be granted service again until its RTS signal is sampled in an un-asserted state.

The Hub configuration input (SW2, switch 10) defines whether or not the Hub is a master or a slave device. Note that only one Hub can be configured as a master device when an expansion Hub is present. This input is checked only during an arbitration state, where one Hub requests the other. In the event that the two Hubs have a collision, and both Hubs request each other, the slave Hub will relinquish its request to the master Hub.

Each of the channels is configurable via a DIP switch (SW4-SW11) to be compatible with each of the serial communications standards available on MICORLOK II CPU boards. For the location of SW4-SW11, refer to Figure 2-6. For a more detailed view of SW4, refer to Figure 2-8. Note that SW4-SW11 have the same style of dip switch. Lettering on the printed circuit board indicates the switch position for each configuration. All eight switches must be thrown as indicated on the silk screen, to configure a given channel. Figure 2-8 shows SW4 configured for the RS-485 serial communication standard.

MASTER COPY

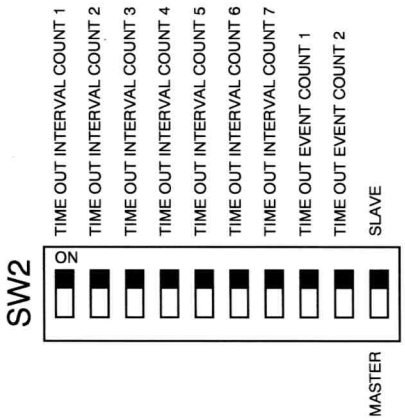

Figure 2-7 - Detailed View of SW2

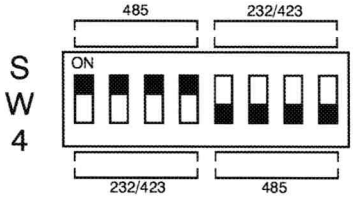

Figure 2-8 - Detailed View of SW4

MASTER COPY

MASTER COPY

3. Network Interface Adapter (NIA)

3.1. Description Overview

Functioning as the link between an external network and the Hub, or between an external network and a separate MICROLOK II unit, the NIA can accept a message and transport it on a TCP/IP based network. The NIA does non-vital protocol conversion to format messages as required, inserting the entire MICROLOK II Network Protocol message into the data field of the TCP/IP message. The NIA handles all issues, both hardware and software, relating to the network interface. It does not modify the content of the MICROLOK II message in any way. The messages are passed intact from end to end allowing for both vital and non-vital data processing within the MICROLOK II units.

3.2. Operating Parameters

Input Voltages

10 Vdc to 36 Vdc with a ripple of 0.5Vp-p (max.)

Power Consumption

Approximately 7W

Built-in Suppression

Transient voltage type

Operating Temperature

-40°C to +70°C

Humidity

0% to 95% non-condensing

Isolation

2000Vrms between battery and enclosure. The ports on the NIA are not isolated and, if required, an external device is necessary to provide isolation.

3.3. Physical Layout and Installation

Figure 3-1 is a diagram of the NIA showing dimensions for mounting the unit. It may be mounted to a panel for installation in a standard communications rack or it may be shelf or wall mounted as well.

The depth of the enclosure is 5.125" and approximately 5.98" including the front connectors.

All connections may be dressed from the right hand side of the unit allowing for visible inspection of the LEDs and operation of the power switch. The power switch illuminates red when power is applied to the unit and the power switch is pressed.

Power is applied through the front mounted WAGO CAGE clamp style connector. It is recommended that a minimum of 16AWG wire be used for the power connections.

MASTER COPY

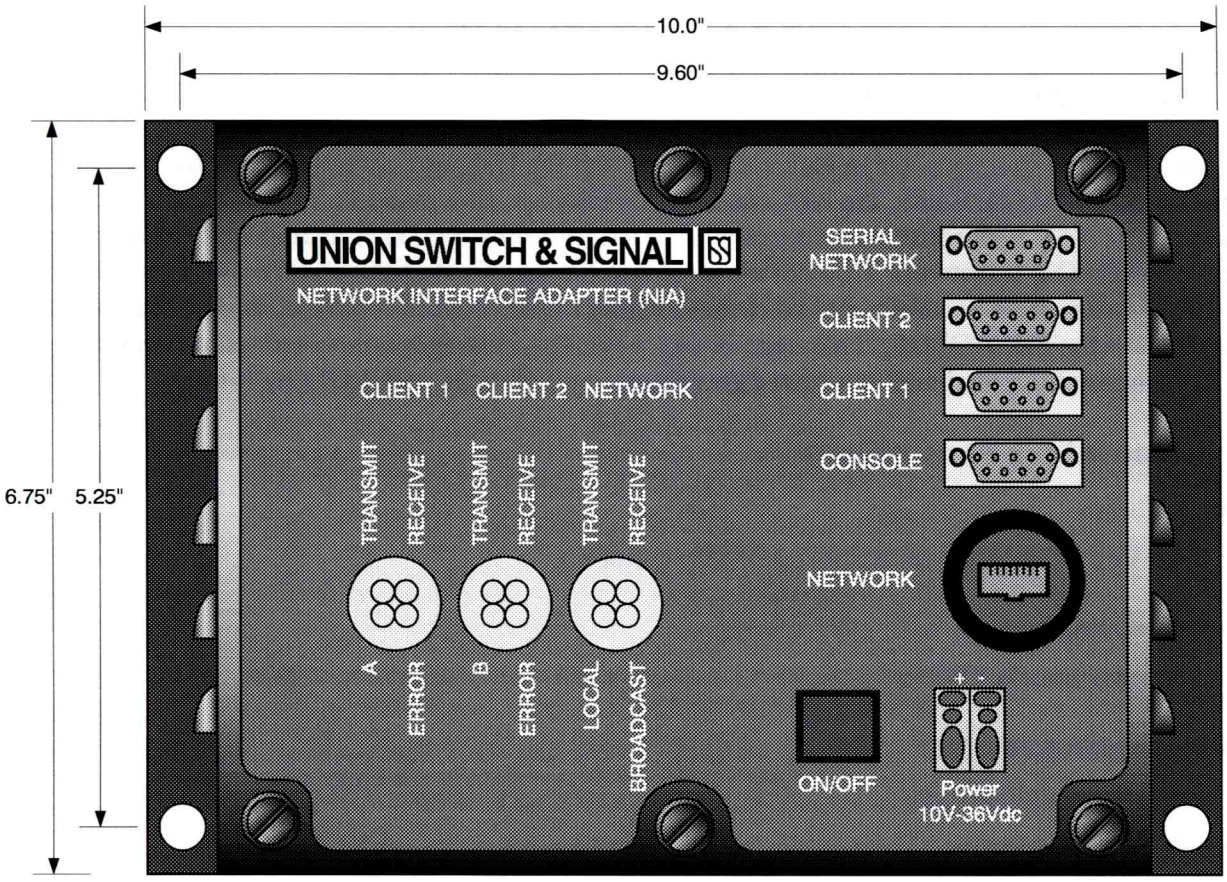

Figure 3-1 - NIA External View

3.3.1. NIA Connections

The Ethernet port is a standard 8-pin RJ-45 connector and the connection may use any of the widely available category 5 (CAT5) or better cable. CAT5 cable consists of four twisted pairs of wires and is available in unshielded (UTP) or shielded (STP) varieties. Generally the unshielded type is used. Additionally, either T568A or T568B standard cables may be used. If the NIA Network port is connected to an external ethernet network, the cable should be pinned straight through, but if two NIA devices are connected through their network ports, the cable should be cross connected as shown in Table 3-1.

The NETWORK port allows for the mating connector to be locked onto the unit using a collar that fits around the standard RJ-45 connector. This collar secures the connector and provides protection to the IP67 level which seals the connection against fluids and dust. Cables ordered from US&S will provide the collar on one end if the NIA is being used in conjunction with an external network and on both ends if two NIA devices are to communicate as peers.

MASTER COPY

Table 3-1 - Ethernet Cross-Connected Cable Pin Out

Connector A Pin	Connector B Pin
1	3
2	6
3	1
6	2
5	4
4	5
7	8
8	7

Two DB-9 style connectors make the MICROLOK II or Hub connection and a diagnostics port available. The first serial connection, the CLIENT 1 port, is a female connector located on the front of the NIA. The connector labeled CONSOLE makes a diagnostic port available. The serial communications ports provide screw locks to secure the connections. Lastly, two other connectors shown in Figure 3-1 are SERIAL NETWORK and CLIENT 2. These ports are for future expansion and are not functional at this time.

Power is connected through a panel mounted feed-through connector having WAGO CAGE clamp style connections. The connector is rated for 32 amperes and will accept conductors from 28AWG to 12AWG. A minimum of 16 AWG is recommended.

3.3.2. User Interface

Section 3.4.4 describes how to use a script to configure the software.

The NIA software drives the LEDs, which provide information on that status of the Serial Port and the Network. There are 12 LEDs, separated into 3 groups of 4 LEDs each.

Client 1	"TRANSMIT," "RECEIVE," "A," and "ERROR"
Client 2	"TRANSMIT," "RECEIVE," "B," and "ERROR"
Network	"TRANSMIT," "RECEIVE," "LOCAL," and "BROADCAST" for the Network.

Figure 3-1 shows the front panel of the NIA showing positions of the LEDs, and Table 3-2 describes the function of the LEDs.

3.3.2.1. Serial Cable Connections

The NIA is connected to the Hub or a MICROLOK II unit using a 9-pin DB style connector with a plastic shell. The 9-pin DB style connector is connected to the CLIENT 1 port. The NIA's pin assignments for the 9-pin DB style connectors are shown in Table 3-3 and Table 3-4.

MASTER COPY

Table 3-2 - Description of the NIA LEDs

LED	Operation
CLIENT1 TRANSMIT	This LED indicates that a message is ready to send and a Request to Send (RTS) signal has been sent. It is on when the RTS signal is set, and goes off when the RTS signal is cleared.
CLIENT1 RECEIVE	This LED indicates that a message is being received. It is on while the message is being received, and turns off when the message has been received, or a byte has not been received within one second.
CLIENT1 A	This LED is on when the NIA's grant timer has expired before the NIA has finished transmitting its message to the Hub, and the Hub Transmit Grant (HTG) signal is set. This LED is cleared when the RTS signal is cleared.
CLIENT1 ERROR	This LED is on whenever an error is detected reading a message, and clears when the message has been received, or a byte has not been received within one second.
CLIENT2 TRANSMIT	This LED indicates that a message is ready to send and a Request to Send (RTS) signal has been sent. It is on when the RTS signal is set, and goes off when the RTS signal is cleared.
CLIENT2 RECEIVE	This LED indicates that a message is being received. It is on only while a message is being received. It is off when no messages are being received or a byte has not been received within one second.
CLIENT2 B	This LED is on when the NIA's grant timer has expired before the NIA has finished transmitting its message to the Hub, and the Hub Transmit Grant (HTG) signal is set. This LED is cleared when the RTS signal is cleared.
CLIENT2 ERROR	This LED is on whenever an error is detected reading a message, and clears when the message has been received, or a byte has not been received within one second.
NETWORK TRANSMIT	This LED is on only when the last message was transmitted over the network. It is off when the last message was transmitted to a MICROLOK II unit attached to the same Hub, or a byte has not been read from the serial port within one second.
NETWORK RECEIVE	This LED is on when a message is received from the network, and is being passed along to the serial connection. This LED is cleared when the serial connection's RTS signal is cleared.
NETWORK BROADCAST	This LED is on only when the last message was broadcast over the network. It is off when the last message was not broadcast over the network or a byte hasn't been read within one second.
NETWORK LOCAL	This LED is on only when the last message was not sent over the network because the destination was on the same serial port as the source. This LED is off when the last message was sent over the network or a byte has not been read within one second.

MASTER COPY

Table 3-3 - NIA to Hub Connections

NIA (DB-9)		Hub (DB-9)	
Pin No.	Signal	Pin No.	Signal
2	RXD (Input)	2	RXD (Output)
3	TXD (Output)	3	TXD (Input)
5	Signal Common	5	Signal Common
7	RTS (Output)	7	RTS (Input)
8	CTS (Input)	1	HTG (Output)

Table 3-4 - NIA to MICROLOK II Connections

NIA (DB-9)		MICROLOK II (Harting)		
Pin No.	Signal	Port 3 Pin No.	Port 4 Pin No.	Signal
2	RXD (Input)	E16	C20	TXD (Output)
3	TXD (Output)	E14	C22	RXD (Input)
5	Signal Common	E22	E22	Signal Common
Jumper Pin 7, RTS (Output) to Pin 8, CTS (Input)		For Port 3, jumper Pin C14, RTS (Output) to Pin E10, DCD (Input) and jumper Pin E18, RXREF to E22, Signal Common For Port 4, jumper Pin A14, RTS (Output) to Pin C16, DCD (Input)		

The NIA serial cable that connects to a MICROLOK II unit has a male 9-pin DB style connector on one end, and a male 25-pin DB style connector on the other end. This cable is connected to one of the MICROLOK II RS-232 ports (Table 3-4).

The NIA serial cable that connects to a Hub has two male 9-pin DB style connectors. For the pin assignments for the NIA serial cable that connects to a Hub, refer to Table 3-3. Figure 3-2 shows the pin assignments for the connecting cable from the Hub to the NIA.

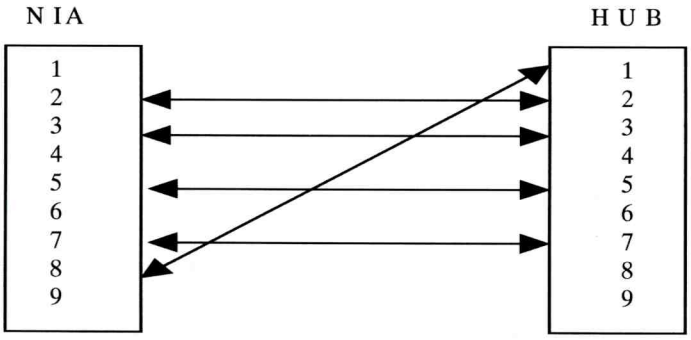

Figure 3-2 - MICROLOK II Network Connecting Cable - NIA connecting to Hub

3.4. NIA Configuration

There are two methods to interface with the configuration software within the NIA. One method is to connect with a serial link using the Console port, the other is through TCP/IP using the Ethernet

MASTER COPY

Network port. One advantage to the serial connection is the operator does not need to know the unit's current IP address.

To configure the NIA, the operator must do the following:

1. **CREATE HOSTS FILE** - A Hosts file must be created and placed on the unit; refer to Section 3.4.1. If the Hosts file has already been placed on the unit and it does not need to be modified, then this step may be skipped.

2. **PC CONFIGURATION** - The PC needs to be configured if connecting to the NIA with the Ethernet port (TCP/IP). The route table might need an entry added so the PC TCP/IP stack can know to access the NIA over the Ethernet port. Refer to Section 3.4.3.1.

3. **CONNECT** – Connect to the NIA either over serial (Hyperterm – refer to Section 3.4.2.2) or Ethernet (Telnet) connection. Refer to Section 3.4.3.2.

4. **CONFIGURE** – Configure the unit, ensuring the correct Hosts file is used (refer to Section 3.4.4).

In all of the following examples, information that the operator types in is shown in **bold** type.

3.4.1. Create Hosts File

Using any editor, create a file that lists every IP Address with an associated unit name of NIA units that this NIA unit will communicate with, including itself. Every entry must be within the same class C subnet. These addresses should be obtained from the network administrator.

The contents of this file can be pasted (Edit/Paste) into the NIA when configuring the unit.

For this example setup, there are 2 NIA units. Neither of the NIA units need to communicate with any unit not in this list. They all belong to the 192.168.14 class C subnet. The contents of this Hosts file will go on every NIA in this list.

```
192.168.14.10     nia-a
192.168.14.11     nia-b
```

3.4.2. Serial Link

3.4.2.1. PC Configuration

Connect a serial cable from the PC to the Maintenance port on the NIA. Use a terminal program such as Hyperterm (Start->Programs->Accessories->Communications->Hyperterminal). Configure it for a bit rate of 38400, 8 data bits, no parity, 1 stop bit, and no flow control.

3.4.2.2. NIA Connection

While the NIA unit boots up, it will dump boot-up text. This text can be ignored. When the unit has finished booting up, the four Network LEDs on the NIA will go dark and the NIA will have a login prompt on the serial link. If you connect to the unit after the unit is booted up, then press the Enter key, and a prompt will be displayed.

MASTER COPY

Here is an example of connecting to a NIA unit. The unit's name appears before the word "login." In this example, the unit's name is "nia," which is the default. To connect, login as **root**, using **password** as the Password. The system then displays the version information before issuing the bash-2.05# prompt.

```
Octagon Systems, 2050 Single Board Computer.
Runing Linux Kernel 2.4.18.
Octagon: 2050 Special Features Enabled.

nia login: root<enter>
Password: password<enter>
NIA Software P/N: N451575-4001
Copyright 2003, Union Switch & Signal Inc.
Version 7.10
FS_VER 7.10
CS_VER 7.10
bash-2.05#
```

3.4.3. TCP/IP Ethernet Link

3.4.3.1. PC Configuration

When connecting to an NIA unit that has not been configured, it is recommended that the connecting cable be an Ethernet cross-over cable.

In some situations, the PC might not be configured to find the NIA on the network. For example, a PC is connected to a company LAN and gets its network information through DHCP. The PC might not have a route to go to the NIA address. Adding a route will tell the PC that the NIA is accessible through the network.

The default IP address of the NIA is 192.168.1.10.

On a Windows 2000 PC, go to Start->Run and type **command**<enter>. A command box will appear.

In the command box type **IPCONFIG**<enter>. The output should be similar to the text below. In this document, the IP address is underlined to point it out, but it will appear in normal type on the screen. The actual IP address will show up different. If the IP Address and / or Subnet Mask shows as 0.0.0.0 reboot the computer.

```
C:\>IPCONFIG<enter>

Windows 2000 IP Configuration

Ethernet adapter Local Area Connection:

        Connection-specific DNS Suffix  . : switch.com
        IP Address. . . . . . . . . . . . : 172.16.103.140
        Subnet Mask . . . . . . . . . . . : 255.255.255.0
        Default Gateway . . . . . . . . . : 172.16.103.1
```


MASTER COPY

Now that we know the IP address we can use the ROUTE command. In this example, the NIA unit is at address 192.168.14.10, and the IP address of the PC is 172.16.103.140.

```
C:\>ROUTE ADD 192.168.14.10 MASK 255.255.255.0
172.16.103.140<enter>
```

This command sets up the PC to communicate to any unit on the 192.168.14 class C subnet.

3.4.3.2. NIA Connection

After the unit boots up and the Network LEDs on the NIA go dark, the NIA will be able to accept Telnet sessions. The default IP address for the NIA is 192.168.14.10.

In this example, the unit has been configured, and the IP address is 192.168.14.10. The version information is displayed right before the bash-2.05$ prompt. Note that when entering the command "**su –<enter>**", press the keys 'S', 'U', 'SPACE', '-', then press 'Enter'.

```
C:\>TELNET 192.168.14.10<enter>
Octagon Systems, 2050 Single Board Computer.
Runing \s Kernel \r.
Octagon: 2050 Special Features Enabled.

login: nia<enter>
Password: nia<enter>
Copyright 2003, Union Switch & Signal Inc.
Version 7.10
FS_VER 7.10
CS_VER 7.10
bash-2.05$ su -<enter>
Password: password<enter>
bash-2.05#
```

3.4.4. NIA Configuration

Type "**./setup**" (Press the keys 'Period', 'Slash', then type in the word "setup", then press the <Enter> key) to run the setup program that configures the unit. (Refer to Section 3.4.4.1.) It configures both the IP network configuration and the NIA parameters. The configuration parameters listed in Table 3-5 apply to either the Serial Link or the TCP/IP configuration steps.

The first configuration parameter is the Hosts file. The default of "/home/nia/hosts" is acceptable. After entering the location of the Hosts file, it will display the contents of this file, and ask if the contents should be changed. If change is required, it will ask for Hosts information to be entered. It is recommended that the user copy and paste from the Hosts file created in the first step (refer to Section 3.4.1).

MASTER COPY

Table 3-5 - Configuration Parameters

Paramter	Description	Default Value
Hosts file	The location on the NIA file system where the Hosts file (see above) will be located. The default location is usually acceptable.	/home/nia/hosts
HOSTNAME	The IP name of the NIA unit.	Nia
IPADDR	The IP Address of the NIA unit.	192.168.14.10
SPEED	The bit rate of the Client connection.	19200 bps
GRNTDLY	The amount of time to wait before getting a Hub grant.	1000 ms
XMTBLKSZ	The maximum number of bytes the NIA can write to the Client port in response to a single Hub grant.	250 bytes
ROUTETMO	The time in seconds that an entry in the NIA routing table is declared valid. If the entry doesn't get updated within that amount of time, the NIA will broadcast messages.	120 seconds
RTADDLMT	The number of address in the routing table added before it cleans out the old entries.	30 entries

3.4.4.1. Configuration Example

In the following example the NIA unit has not been configured. The unit is to be called **nia-e**, its IP address is **192.168.14.14**, and the data rate is to be **38400**.

Type "**./setup**". The system will respond by asking for information. It will list the default values and ask if there are any changes to be made. If there are changes, they can be made by entering the new values. If the default value is desired, then press the <Enter> key to accept it.

The system will then list the changes that were made and ask for confirmation of the changes. Once the changes have been confirmed, the system will need to be rebooted for the changes to become effective.

```
Bash-2.05# ./setup<enter>
Please enter the following information.
Values in [] denote the current setting,
and will be treated as the default value.

Hosts file=[/home/nia/hosts]<enter>


  192.168.14.10     nia-a
  192.168.14.11     nia-b
  192.168.14.12     nia-c
  192.168.14.13     nia-d
  192.168.14.14     nia-e
  192.168.14.15     nia-f
  192.168.14.16     nia-g
  192.168.14.17     nia-h
```


MASTER COPY

```
192.168.14.18      nia-I
192.168.14.19      nia-j
192.168.14.20      nia-k
192.168.14.21      nia-l
192.168.14.22      nia-m
192.168.14.23      nia-n

Do you wish to change this file? (y/n) n<enter>
The hosts file has NOT been changed
HOSTNAME=[nia] nia-e<enter>
IPADDR=[192.168.14.10] 192.168.14.14<enter>
SPEED=[19200] 38400<enter>
GRNTDLY=[1000] <enter>
XMTBLKSZ=[250] <enter>
ROUTETMO=[120] <enter>
RTADDLMT=[30] <enter>

The following options have been entered:

HOSTNAME=  nia-e
IPADDR=    192.168.14.14
hosts file=/home/nia/hosts
SPEED=     38400
GRNTDLY=   1000
XMTBLKSZ=  250
ROUTETMO=  120
RTADDLMT=  30

Do you wish to save these settings? (y/n) y<enter>
Settings have been written.
Unit must restart for changes to take effect.
Bash-2.05#
```

3.4.5. Configuration Complete

At this point the unit can be powered off, and when it is turned on again the unit will be active with the new settings. Hyperterm or the Telnet session can be closed.

MASTER COPY

4. Executive Revision Changes

This section contains a description of the changes made to support the new MICROLOK II Network Protocol. In addition to the implementation of the new protocol, several other enhancements have been incorporated in this revision of the executive and are identified in the following sections. The changes described in this section are applicable to Revision 7.00 Executive and Development System. The new executive and Development System have been released under new part numbers. Please refer to Section 6 for information relating to all new part numbers.

The Executive and Development system continue to support all functions and features from previous systems but are not compatible with the tools or compiled applications from those versions. Any application programs must be re-compiled with the new compiler, and the new Development System, including the Maintenance tool, must be used with the new executive. The new executive and Development System maintain the functions and features of the following previous software revisions. Changes made to these part numbers subsequent to the revisions listed, may or may not have been incorporated in the software for the new part numbers.

MICROLOK II Executive Software

N451232-1701	Revision 5.23
N451232-1921	Revision 6.00

MICROLOK II Development System Software

N451232-1781	Revision 5.23
N451232-1783	Revision 5.23 (Maintainer's Version)
N451232-1922	Revision 6.00

4.1. Application Logic Changes – Network Protocol

The new MICROLOK II Network Protocol is specified in the **COMM** subsection of the **INTERFACE** section. As with the other MICROLOK II serial specifications, it consists of a LINK definition, which identifies physical port related options and between 1 and 32 STATION definitions, which identify information relating to the individual logical stations.

4.1.1. Link and Port Definition

A link and port definition is specified as:

```
LINK: <link name>
  [ADJUSTABLE | FIXED] ENABLE: <flag>
  PROTOCOL: MII.PEER
  [ADJUSTABLE | FIXED] PORT: <physical port #>;
  [[ADJUSTABLE | FIXED] POINT.POINT: <1 or 0>;]
  [[ADJUSTABLE | FIXED] BAUD:  <valid baud rate>;]
  [[ADJUSTABLE | FIXED] STOPBITS:  <1 or 2>;]
  [[ADJUSTABLE | FIXED] PARITY: <EVEN,ODD,MARK,SPACE,NONE>;]
  [[ADJUSTABLE | FIXED] KEY.ON.DELAY:  <key delay time>;]
  [[ADJUSTABLE | FIXED] KEY.OFF.DELAY:  <key delay time>;]
  [[ADJUSTABLE | FIXED] GRANT.DELAY: <time>:<unit>;]
```


MASTER COPY

The <link name> is a user specified name associated with the link. This name will be used by the maintenance tool when displaying information relating to the link and will also be used when formulating the application variable names for the system bits associated with the link and its stations. There are two system bits associated with the link

```
<link name>.ENABLED          (Read only)
<link name>.DISABLE          (Read/Write)
```

The <link name>.ENABLED bit indicates if the link has been enabled in the configuration. The <link name>.DISABLE bit can be set by the application to cause the link to cause the link to stop communications for all stations defined for the link.

The ENABLE statement defines the default value for the link enable and functions the same as the enables for the other serial links.

The protocol type is MLKII.PEER and identifies the new Network Protocol.

The GRANT.DELAY is a programmable timeout that specifies the maximum amount of time the link will wait for a Hub Transmit Grant (HTG) with an active Request To Send (RTS). Once the grant delay has expired, the RTS will be de-activated and then re-activated in order to re-try the message transmission.

The ENABLE, PORT, POINT.POINT, BAUD, STOPBITS, PARITY, KEY.ON.DELAY and KEY.OFF.DELAY specifications are the same link related items as used for a MICROLOK or GENISYS link specifications. Please refer to SM-6800D for detailed descriptions of these items. The only differences between the MLKII.PEER link and the other links is in the supported baud rates.

Table 4-1 identifies the ranges, resolution, and default value for the link related parameters.

Table 4-1 - MII.PEER Configuration Parameters*

Configuration Item	Default Value	Resolution	Min Value	Max Value	Required
Link Enable Bit	None	1	0	1	Yes
Point.Point	1	1	0	1	No
Baud	19200	Tabled – 300,600,1200,2400,4800,9600,19200,38400			No
Stopbits	1	1	1	2	No
Parity	None	None, Even, Odd, Mark, Space			No
Key.On.Delay	0	1	0	280	No
Key.Off.Delay	12	1	0	280	No
Grant.Delay	1000	1	10	10,000	No

* All times are in milliseconds.

4.1.2. MII.PEER Station Address Definitions

After the link and port definitions, the individual addresses and data are specified. Up to 32 station addresses can be defined in a MII.PEER link. There are four types of MII.PEER addresses. They are

MASTER COPY

listed below, followed by their valid configuration items. Table 4-2 lists the valid configuration values.

```
MII ADDRESS
    [ADJUSTABLE | FIXED]  MII.ADDRESS: <address>
NON-VITAL MII ADDRESS
    [ADJUSTABLE | FIXED]  NV.MII.ADDRESS: <address>
ATCS ADDRESS
    [ADJUSTABLE | FIXED]  ATCS.ADDRESS: <address>
NON-VITAL ATCS ADDRESS
    [ADJUSTABLE | FIXED]  NV.ATCS.ADDRESS: <address>
```

The address identifies the source address for all outbound messages and the destination address for all inbound messages for this station. The station address specification also identifies the stations as either vital or non-vital. The PEER.ADDRESS identified below, must have the same address format, either MII or ATCS, as the original station address.

The rest of the station configuration items are common for all types of stations.

```
[ADJUSTABLE | FIXED]  ENABLE: <flag>
STATION.NAME: <station name>;
[ADJUSTABLE | FIXED]  PEER.ADDRESS: <address>;
[[ADJUSTABLE | FIXED]  TIME.STAMP: <value>;]
[[ADJUSTABLE | FIXED]  CLOCK.MASTER: <flag>;]
[[ADJUSTABLE | FIXED]  ACK.TIMEOUT: <time>:<unit>;]
[[ADJUSTABLE | FIXED]  HEARTBEAT.INTERVAL: <time>:<unit>;]
[[ADJUSTABLE | FIXED]  INDICATION.UPDATE.CYCLE: <value>;]
[[ADJUSTABLE | FIXED]  STALE.DATA.TIMEOUT: <time>:<unit>;]
```

The ENABLE and STALE.DATA.TIMEOUT items provide the same function on this link as on other supported links. The only difference is the supported ranges for the STALE.DATA.TIMEOUT which are detailed in Table 4-2.

The <station name> is a user specified name associated with the station. This name will be used by the maintenance tool when displaying information relating to the station and will also be used when formulating the application variable names for the system bits associated with the station. There are two system bits associated with each station.

```
<link name>.<station name>.ENABLED              (Read only)
<link name>.<station name>.DISABLE              (Read/Write)
<link name>.<station name>.STATUS               (Read only)
<link name>.<station name>.INPUTS.RECEIVED      (Read only)
```

The <link name>.<station name>.ENABLED bit indicates if the station has been enabled in the configuration. The <link name>.<station name>.DISABLE bit can be set by the application to cause the link to stop communications for this station.

The status of each slave address link can be determined from the <link name>.<station name>.STATUS bit. This status is set when communication with the specified slave is occurring regularly.

MASTER COPY

Each station address also has a system bit to indicate that data has been received for that address. The <link name>.<station name>.INPUTS.RECEIVED bit will be toggled on and off in such a way that it will trigger any logic in which it is used but never evaluate as TRUE in the application.

The PEER.ADDRESS specifies the address of the station with which this station will communicate. This address will be the destination address of all outbound messages and the source address of all inbound messages for this station. This address must have the same format, MII or ATCS, as the station address.

The TIME.STAMP is used to determine if the optional time stamp should be included in messages transmitted by this station. The CLOCK.MASTER flag indicates if this station should transmit a clock update request whenever the clock update function is requested through the application. This will allow the partner unit to synchronize its time with this unit.

The timeouts associated with the station define the frequency and types of messages transmitted and received by the station. The HEARTBEAT.INTERVAL specifies the rate at which background status messages will be sent when there are no changes in the output data values. The INDICATION.UPDATE.CYCLE specifies the number of HEARTBEAT.INTERVALs between indication update messages when there are no changes in the output values. The ACK.TIMEOUT specifies the length of time the station will wait for a data acknowledge from the peer unit before terminating the wait for an acknowledge. The STALE.DATA.TIMEOUT specifies the maximum length of time the link will remain up without receiving a message from the peer unit. The resolution and default values for the station related parameters are listed in Table 4-2.

After the station configuration parameters have been identified, the application interface variables must be defined. The new Network Protocol supports transmission of vital and non-vital data in both boolean and numeric format.

Table 4-2 - MII PEER Station Configuration Parameters

Configuration Item	Default Value	Res.	Min Value	Max Value	Reqd
Station Enable Bit	None	1	0	1	Yes
MII.Address	0	1	0	65534	Yes
MII.ATCS.Adddress	0	0 or valid ATCS address			Yes
Peer.Address (MLK)	0	1	0	65534	Yes
Peer.Address (ATCS)	0	0 or valid ATCS address			Yes
Clock.Master	0	1	0	1	No
Time.Stamp	0	1	0	1	No
Ack.Timeout	Value of Heartbeat Interval	1	50	60,000	No
Heartbeat.Interval	40% of Stale Data Timeout	1	100	600,000	No
Indication.Update.Cycle	10	1	1	100	No
Stale.Data.Time.Out (Vital Station)	5000	1	500	600,000	No
Stale.Data.Time.Out (Non-Vital Station)	60000	1	500	600,000	No

MASTER COPY

Vital I/O

```
[OUTPUT:  <bit list>;]
[INPUT:  <bit list>;]
[NUMERIC.OUTPUT.8:  <Numeric list>;]
[NUMERIC.OUTPUT.16:  <Numeric list>;]
[NUMERIC.OUTPUT.24:  <Numeric list>;]
[NUMERIC.OUTPUT.32:  <Numeric list>;]
[NUMERIC.INPUT.8:  <Numeric list>;]
[NUMERIC.INPUT.16:  <Numeric list>;]
[NUMERIC.INPUT.24:  <Numeric list>;]
[NUMERIC.INPUT.32:  <Numeric list>;]
```

Non-Vital I/O

```
[NV.OUTPUT:  <bit list>;]
[NV.INPUT:  <bit list>;]
[NV.NUMERIC.OUTPUT.8:  <Numeric list>;]
[NV.NUMERIC.OUTPUT.16:  <Numeric list>;]
[NV.NUMERIC.OUTPUT.24:  <Numeric list>;]
[NV.NUMERIC.OUTPUT.32:  <Numeric list>;]
[NV.NUMERIC.INPUT.8:  <Numeric list>;]
[NV.NUMERIC.INPUT.16:  <Numeric list>;]
[NV.NUMERIC.INPUT.24:  <Numeric list>;]
[NV.NUMERIC.INPUT.32:  <Numeric list>;]
```

Vital stations must contain only vital inputs and outputs. Non-vital stations must contain only non-vital inputs and outputs.

There may be up to 128 boolean inputs and 128 boolean outputs per address. Numeric inputs and outputs are limited to 144 total bytes each. The numeric I/O format allows the application to specify the number of transmitted bytes to be used for each variable. Internally, each numeric variable is a 32-bit value (31 bits plus a sign bit). The application specification will identify how many of these bits will actually be included in the message. The valid options are:

```
8      7 bits plus a sign bit
16     15 bits plus a sign bit
24     23 bits plus a sign bit
32     31 bits plus a sign bit
```

4.2. Application Logic Changes – Version Strings

A site ID string and a date stamp has been added to the application. Each string may only have up to 80 characters and the string must be in double quotes. These optional strings appear after the **MICROLOK_II Program <name>** statement:

```
[SITE.ID.STRING: <string>;]
[DATE.STAMP:  <string>;]
```

These strings may be used to help identify an application by name. These strings will be displayed by the Maintenance Tool and included in the various logs saved by the Maintenance Tool (such as the

MASTER COPY

Event and User Data Logs). These strings are only used for display by the MICROLOK II Development System.

4.3. Application Logic Changes – New System Bits

Several new system bits have been added to the system. Table 4-3 lists the system Boolean bits.

Table 4-3 - System Boolean Bits

System Bit Name	Application Access to Bit	Bit Function
PEER.CLOCK.SET	Read/Write	Setting this bit will cause the peer stations identified as clock masters (CLOCK.MASTER configuration item set to 1) to send the update flag in the next message to its peer station. This will cause the peer station to update its clock with the time contained in the peer message.
USER.RESTRICTED	Read/Write	Indicates that the CPS is down due to user request (CPS.ENABLE bit is clear). *
ERROR.RESTRICTED	Read/Write	Indicates that the CPS is down due to system errors. *
CPS.RESET	Read/Write	When set, instructs the unit to RESET and to attempt to pick the CPS.

* These two bits, along with the CPS.STATUS bit, identify the mode in which the system is running. Only one of these bits will be set at any time. If the CPS.Status bit is set, the system is running in Normal mode with all I/O active. If the ERROR.RESTRICTED bit is set, the system is running in Selective Shutdown mode with the CPS down and all CPS controlled output inactive. This mode is activated when the system encounters repeated critical errors in a given time period. If the USER.RESTRICTED bit is set, the system is running in User Selective Shutdown mode with the CPS down and all CPS controlled output inactive. This mode is activated when the system is not in ERROR.RESTRICTED mode and the CPS.ENABLE bit is clear.

4.4. Application Logic Changes – Unit Configuration

The following items have been modified in the User Configuration:

4.4.1. Logic Timeout Configuration

The maximum amount of time for logic solving can be specified by this parameter. This specification looks like

```
[[ADJUSTABLE | FIXED] LOGIC_TIMEOUT: <timeout delay>:<unit>]
```

where **`<timeout delay>:<unit>`** is a time specified like times for timer attributes. The resolution is 1ms and it may be between 100 ms and 5 seconds. If not specified, the timeout will be **`FIXED`** and 1 second.

MASTER COPY

4.4.2. Delay Reset Configuration

During a critical error, the time between the CPS being dropped and the processor resetting itself can be delayed to allow a redundant partner to come up first. This parameter is set by

```
[[ADJUSTABLE | FIXED] DELAY_RESET: <reset delay>:<unit>]
```

where <reset delay>:<unit> indicates the amount of time to delay. It has a resolution of 1ms and a maximum value of 10 seconds. The default value for the DELAY_RESET is 0 ms.

4.4.3. Event Threshold

The user may set the event threshold. This parameter is set by

```
[[ADJUSTABLE] EVENT.THRESHOLD.X: <1-3>]
```

where x is a value between 1 and 64.

These values allow the system to include additional detailed information in the system event log for some event classes. These values were previously only available through the actual configuration process with the physical unit.

MASTER COPY

4.5. Sample Application

The following is a sample MICROLOK II Application with the Network Protocol defined.

```
MICROLOK_II Program Peer_Sample;

SITE.ID.STRING: "Manual Sample";
DATE.STAMP: "February 23, 2004";

INTERFACE
      COMM
        LINK: MII_PEER1
            ADJUSTABLE ENABLE: 1
            PROTOCOL: MII.PEER
            ADJUSTABLE PORT: 3;
            ADJUSTABLE BAUD: 19200;
            ADJUSTABLE STOPBITS: 1;
            ADJUSTABLE PARITY: NONE;
            ADJUSTABLE KEY.ON.DELAY: 0;
            ADJUSTABLE KEY.OFF.DELAY: 0;
            ADJUSTABLE GRANT.DELAY: 1000:MSEC;
            ADJUSTABLE POINT.POINT: 1;

            // VITAL STATION
            ADJUSTABLE MII.ADDRESS: 10
                  ADJUSTABLE ENABLE: 1
                  STATION.NAME: STATION_10;
                  ADJUSTABLE PEER.ADDRESS: 30;
                  ADJUSTABLE TIME.STAMP: 1;
                  ADJUSTABLE ACK.TIMEOUT: 1000:MSEC;
                  ADJUSTABLE HEARTBEAT.INTERVAL: 1000:MSEC;
                  ADJUSTABLE INDICATION.UPDATE.CYCLE: 5;
                  ADJUSTABLE STALE.DATA.TIMEOUT: 2000:MSEC;
                  ADJUSTABLE CLOCK.MASTER: 1;
                  OUTPUT:
                        MII.10.30.BO1;
                  INPUT:
                        MII.10.30.BI1;

BOOLEAN BITS
      flash1;

TIMER BITS
      flash1:  SET =   1:SEC      CLEAR =   1:SEC;

CONFIGURATION
    SYSTEM
        LOGIC_TIMEOUT:                      500:MSEC;

LOGIC BEGIN
      ASSIGN 1 TO CPS.ENABLE;
      ASSIGN ~flash1 TO flash1;
      ASSIGN flash1 TO MII.10.30.BO1;
END LOGIC
END PROGRAM
```


MASTER COPY

5. Network Protocol Maintenance Tool

The maintenance tool described in this section is for the Network Protocol. It allows the operator to view various system statistics and activate or deactivates various parts of the Network Protocol.

5.1. System Information

NOTE
This section describes the part of the Maintenance Tool that is applicable to the MICROLOK II Network Protocol. For a complete description of the maintenance tool, please refer to SM 6800C.

On the main launch menu (Figure 5-1), click on the button labeled "System Information". It is located at the far left of the first row of buttons just under the title "Run-time Monitor". The new System Information View (Figure 5-2) will appear on the screen.

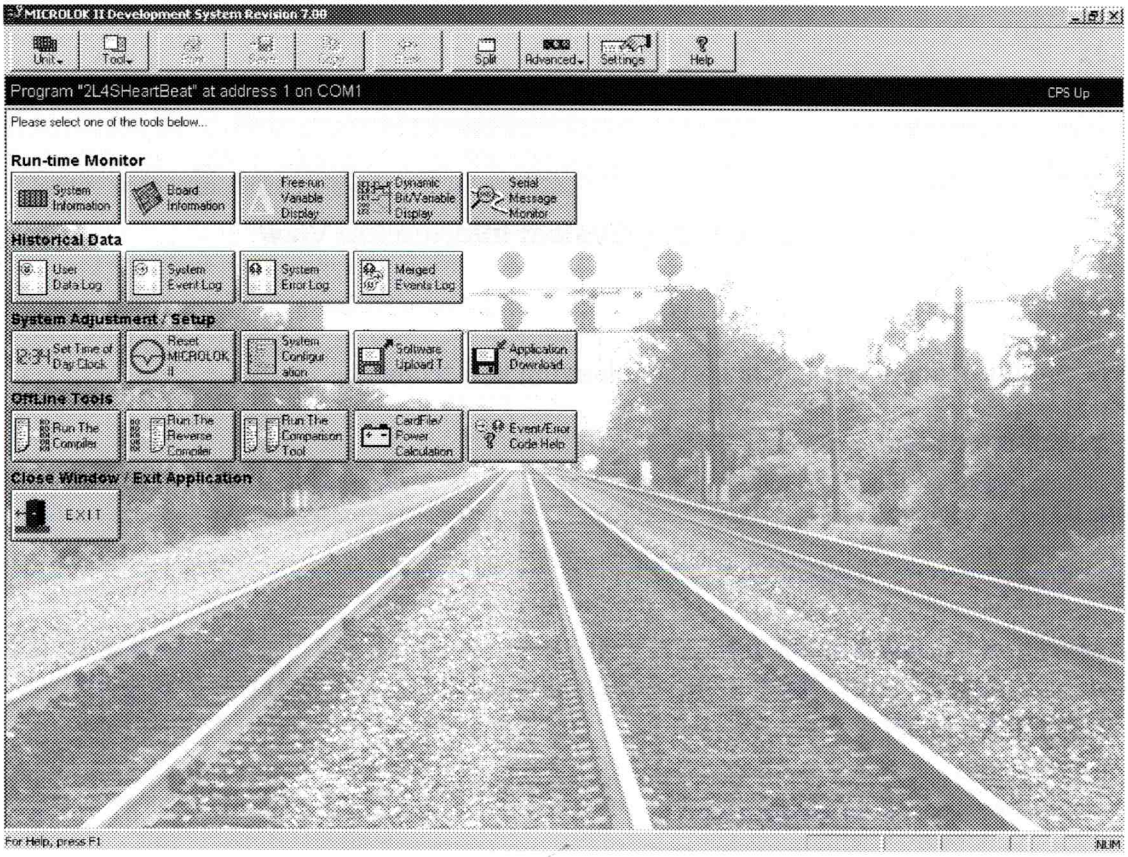

Figure 5-1 - Main Launch Menu for the Maintenance Tool

MASTER COPY

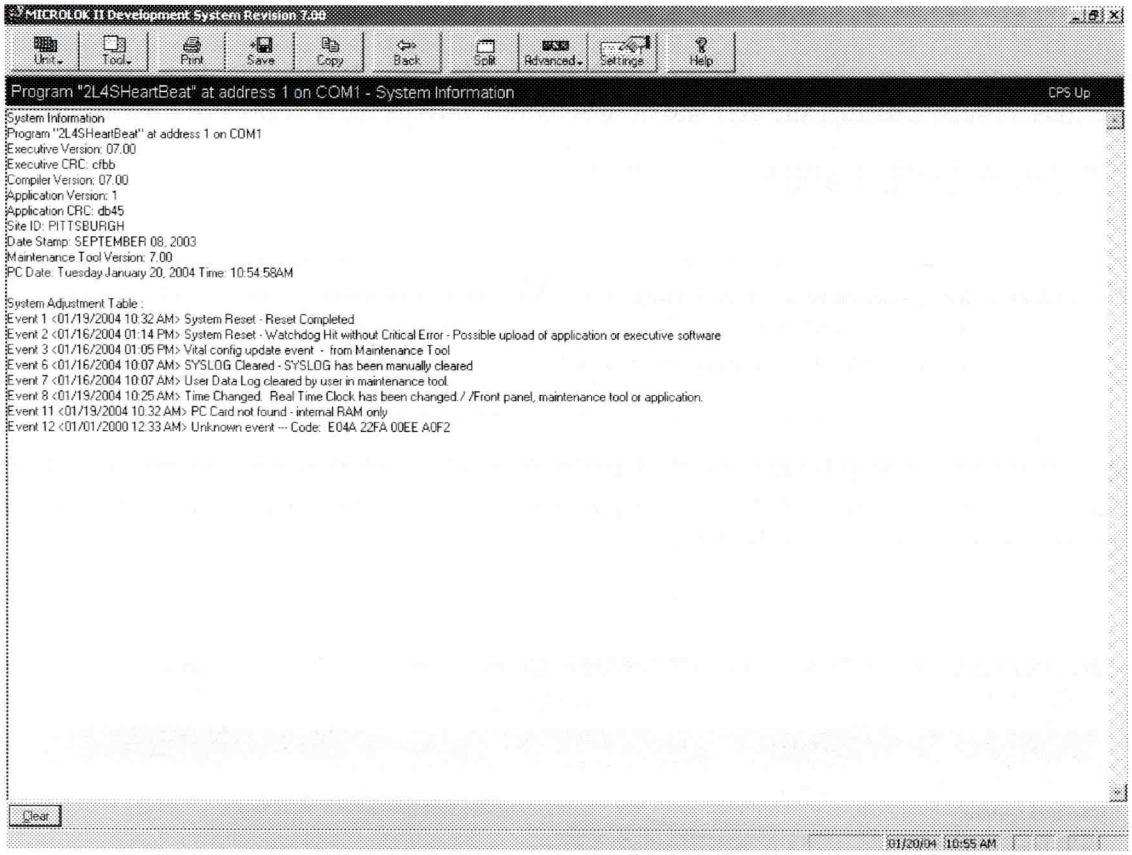

Figure 5-2 - System Information View

The System Information View includes the following new features:

- Application Version
- Site ID
- Date Stamp

The Application Version is in the format XX.XX where X can be any character such as 01.00. In the application program it is specified in the configuration section. A code example is as follows.

```
CONFIGURATION
    SYSTEM
        APPLICATION.VERSION: 1;
```

The Site ID and Date Stamp are comments placed at the beginning of the application program and can be up to 80 characters long. An example of a Site ID is "HOUSTON" and an example of a Date Stamp is "January 20, 2004". A code example is as follows:

MICROLOK_II PROGRAM 2L4SheartBeat;
SITE.ID.STRING: "PITTSBURGH";
DATE.STAMP: "SEPTEMBER 08, 2003";

5.2. Board Information

On the main launch menu (Figure 5-1), click on the button labeled "Board Information". It is the second from the left in the first row of buttons under the title "Run-time Monitor". This will bring up a Board Information Menu (Figure 5-3) which will allow the user to view statistical information for both boards and protocol links. A figure similar to Figure 5-3 will be displayed for all enabled boards and links. The particular application shown in Figure 5-3 has no boards defined, so only the enabled protocol links are shown. It shows two MICROLOK II Network Protocol links. The first link is called MII_PEER_1, and the second link is called MII_PEER_2. These are user defined link names in the application program. As shown in the figure, a tooltip is shown when the cursor hovers above a button. To enter the Link Information view for a particular link, simply click on the appropriate button.

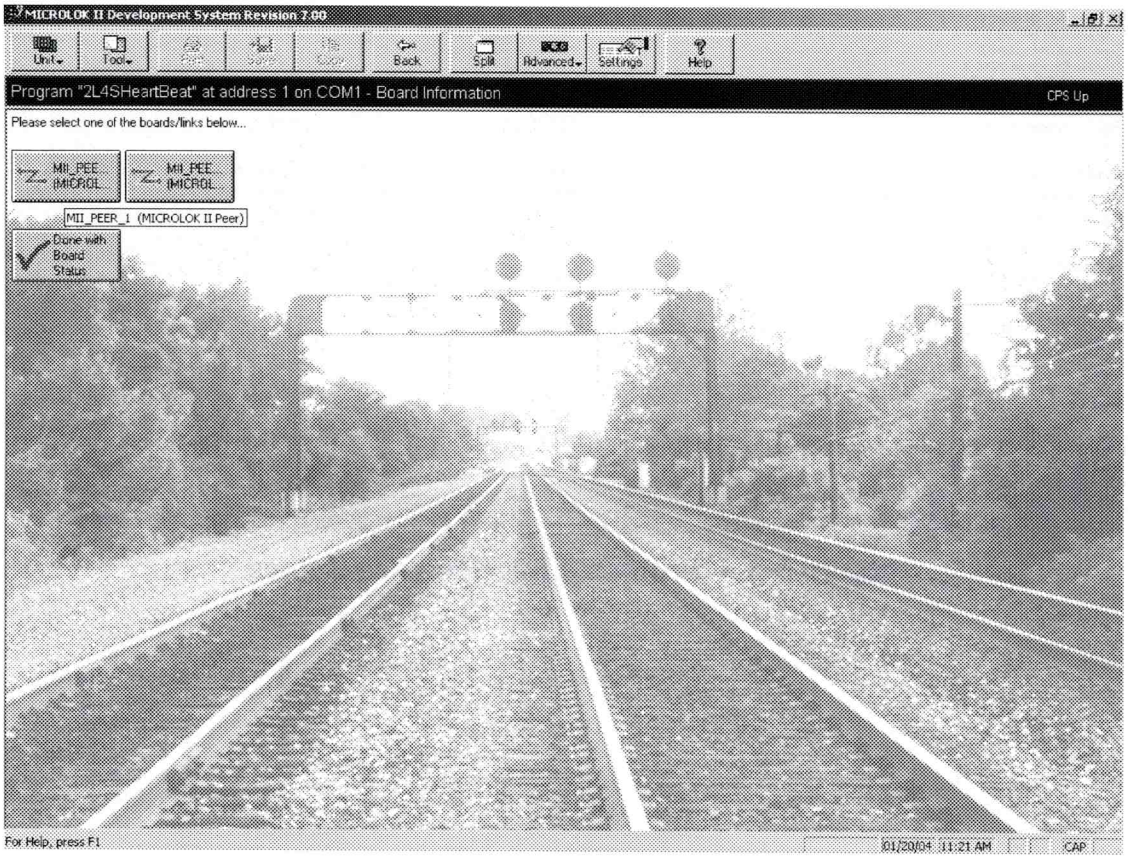

Figure 5-3 - Typical Board Information Menu

MASTER COPY

5.3. Protocol Link Statistics

Clicking on a Link button will invoke the Protocol Link Statistics Screen (Figure 5-4). The first section displays the statistics for the main protocol link. The next sections display the station statistics. In this particular screen, there are two stations defined. Scrolling down the screen will bring the station statistical information into view. (Figure 5-5).

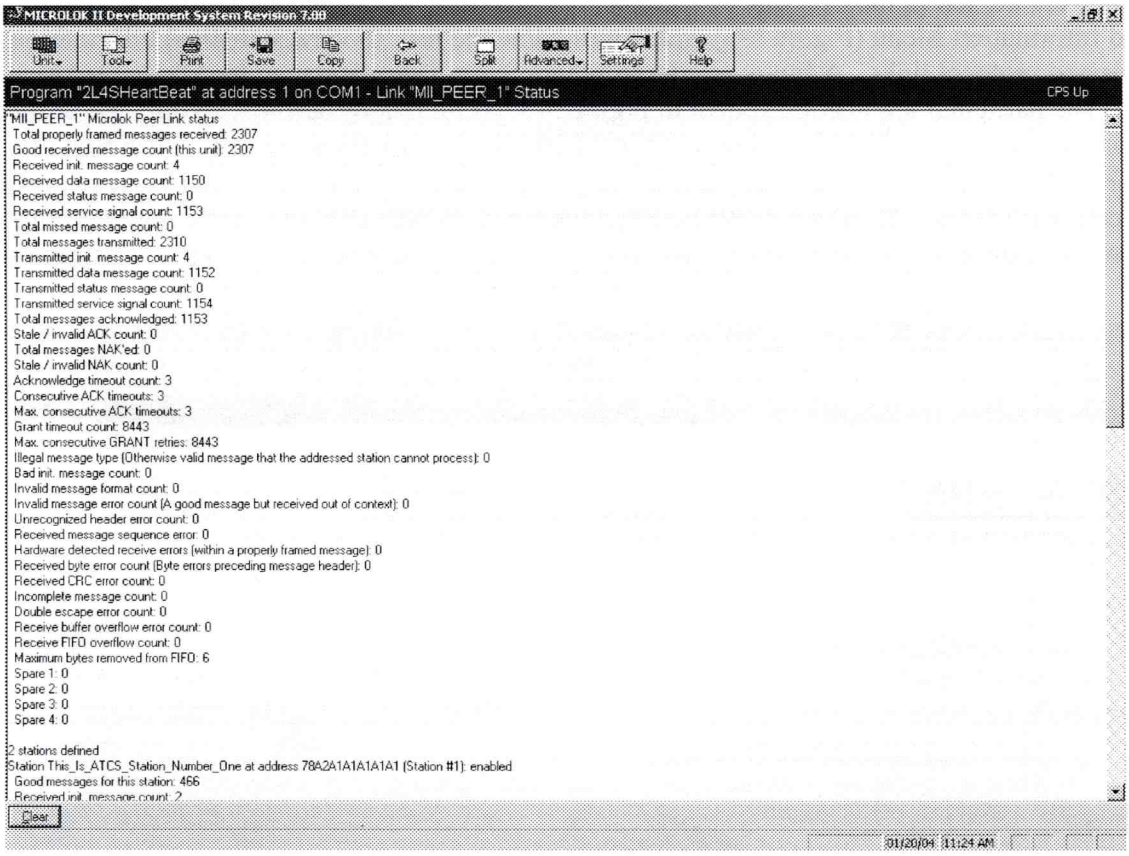

Figure 5-4 - Protocol Link Statistics Screen

MASTER COPY

Figure 5-5 displays the station statistics which include the number of stations there are for the protocol link, each station name, station address, whether the station is enabled or not, and the station's statistics.

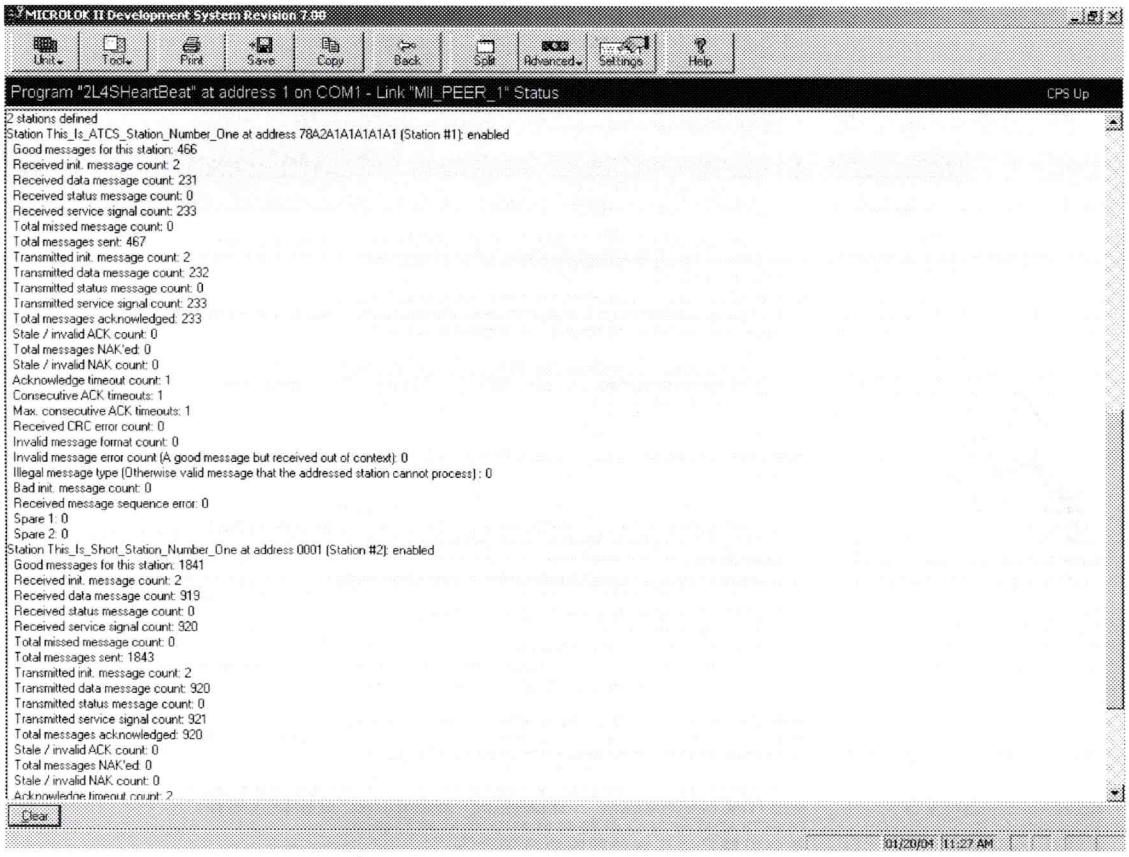

Figure 5-5 - Station Statistics Screen

MASTER COPY

5.4. Serial Message Monitor

On the main launch menu (Figure 5-1), click on the button labeled "Serial Message Monitor". It is at the far right of the first row of buttons just under the title "Run-time Monitor". Figure 5-6 shows the Serial Link Monitor view for the MICROLOK II Network Protocol.

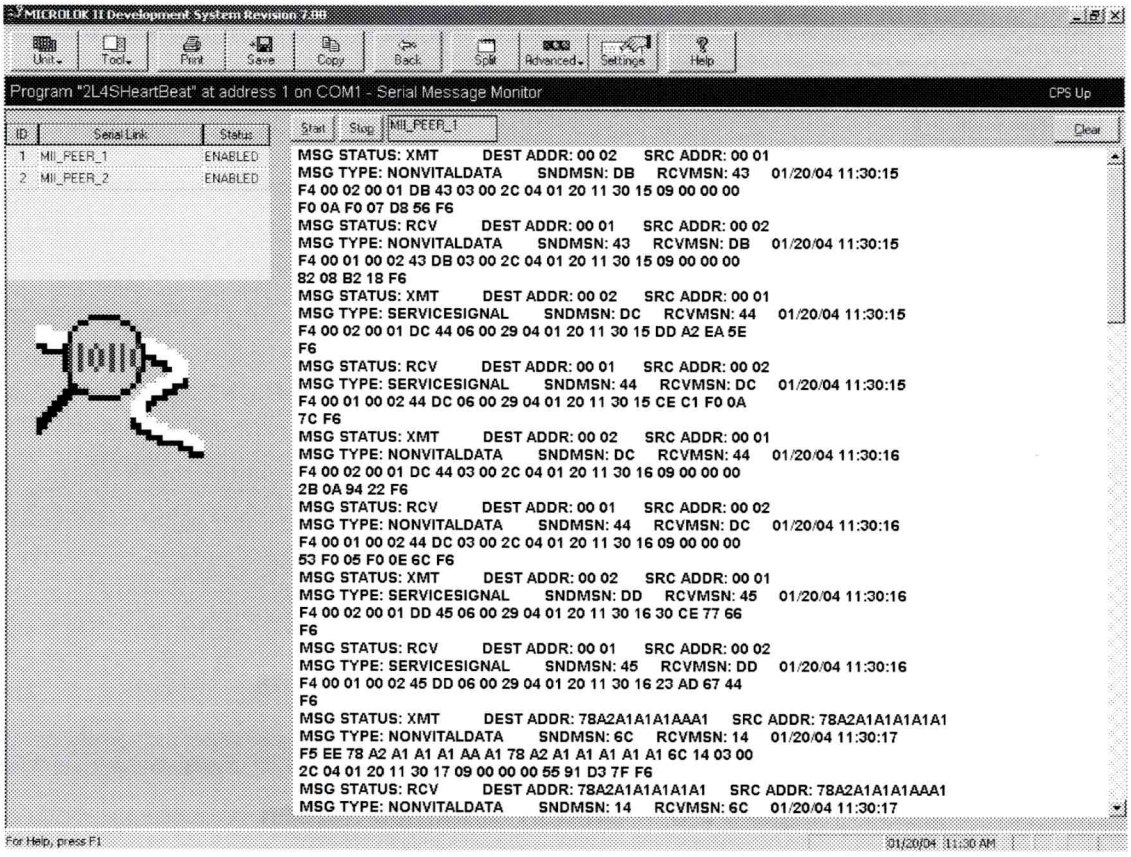

Figure 5-6 - Serial Link Monitor View

In the Serial Link Monitor View, a MICROLOK II PEER record is displayed with a descriptive information section and then the actual serial bytes. The following is an example of one record.

MSG STATUS: XMT DEST ADDR: 00 02 SRC ADDR: 00 01

MSG TYPE: NONVITALDATA SNDMSN: EF RCVMSN: 57 01/20/04 13:30:03

F4 00 02 00 01 EF 57 03 00 2C 04 01 20 13 30 03 09 00 00 00

8F E1 9F 62 F6

Definitions of each of the items in this view and the various options for each are presented in the following discussion.

MASTER COPY

5.4.1. MSG STATUS

The possibilities for the MSG STATUS (Message Status) information are:

- XMT (Transmit)
- RCV (Receive)
- MONITOR DATA LOST
- BAD SEQUENCE ERROR
- HARDWARE ERROR
- FORMAT ERROR
- CRC ERROR
- MAINTENANCE TOOL ERROR

5.4.2. DEST ADDR and SRC ADDR

The DEST ADDR and SRC ADDR are the destination address and the source address respectively. The destination address is the address of the message receiver and the source address is the address of the message sender. The address can be in either short or long format. An example of a short address is 0001 and an example of a long address is 78A2A1A1A1AAA1. A short address is also known as a Peer address and a long address is also known as an ATCS address.

5.4.3. MSG TYPE

The possibilities for MSG TYPE (Message Type) are:

- UNKNOWN (Unknown due to error) – byte value 0x00
- INIT (Initialization) – 0x01
- VITALDATA – 0x02
- NONVITALDATA – 0x03
- STATUS (Station Status) – 0x04
- SERVICESIGNAL – 0x06

5.4.4. SNDMSN – RCVMSN

SNDMSN represents the send message sequence number and RCVMSN represents the receive message sequence number.

5.4.5. Date and Time Stamp

The date and time stamp are optional, so if no time exists the text "NO TIME SPECIFIED" will be shown. If a time exists, then the date and time stamp will be shown in a 24-hour format. The date/time format is MM/DD/YY HH:MM:SS where M = month, D = day, Y = year, H = hour, M = minute, and S = second. A typical date time stamp is 01/20/04 13:30:00, which is January 20 2004 at 1:30 PM.

5.4.6. Actual Bytes

F4 00 02 00 01 EF 57 03 00 2C 04 01 20 13 30 03 09 00 00 00

8F E1 9F 62 F6

MASTER COPY

The format for the byte fields is as follows:

The first byte is the message byte and can be either F4 or F5. F4 represents a PEER message and F5 represents an ATCS message. In Figure 5-6, the message byte is F4, and therefore is a PEER message.

The next two fields are the destination address and the source address (00 02 and 00 01 in Figure 5-6).

The next fields are the send and receive message sequence number and are both one byte in length. They are bytes EF and 57 in Figure 5-6.

The next byte field is the message type. It is 03 or nonvital data.

The next field is two bytes in size and is the high status byte and the low status byte. The high status byte is always zero (00). The low status byte contains 8 bits (0 through 7; 0 is the least significant bit) whose meaning is as follows:

Bit 0 – ACK flag (Acknowledge)
Bit 1 – NAK flag (Negative Acknowledge)
Bit 2 – Message requires an ACK flag
Bit 3 – Communication link up flag
Bit 4 – Broadcast message flag
Bit 5 – Message includes a time stamp flag
Bit 6 – Update the system clock flag
Bit 7 – Initialization requested flag

In Figure 5-6, the low status byte is 2C or 0010 1100 in binary. This is represented below (read the bits from right to left in increasing order).

7 6 5 4 3 2 1 0 ← Bit Number

0 0 1 0 1 1 0 0 ← Bit Value

In Figure 5-6, bits 2, 3, and 5 are set to 1. This means that the message requires an ACK, a communication linkup, and the message includes a time stamp.

The next field is the date/time stamp field which is six bytes in length (04 01 20 13 30 03). The byte order is:

YY MM DD HH MM SS where Y = year, M = month, D = day, H = hour, M = minute and S = second. The bytes in the example are 04 01 20 13 30 03. This represents January 20, 2004 at 1:30 PM.

The next byte field is the size of the Boolean data field in bits. The size in Figure 5-6 is 09 bits, so it will take up two bytes (8 bits take up one byte).

The next byte field is the size of the numeric data field in bytes. In Figure 5-6, the size is 00, and so can be ignored.

MASTER COPY

In Figure 5-6, the next two bytes are the Boolean data bytes, which are both zero.

The last five bytes in a message (second row in Figure 5-6) will always be the CRC and the terminating byte. The four bytes before the F6 terminating byte represent the CRC-31 checksum. In Figure 5-6, they are bytes 8F E1 9F 62. The last byte will always be F6, which signifies the end of the message.

A message can also be an ATCS type of message, signified by the starting F5 character. An example of this type of message follows.

MSG STATUS: XMT DEST ADDR: 78A2A1A1A1AAA1 SRC ADDR: 78A2A1A1A1A1A1
MSG TYPE: NONVITALDATA SNDMSN: 67 RCVMSN: 0F 01/20/04 15:11:40
F5 EE 78 A2 A1 A1 A1 AA A1 78 A2 A1 A1 A1 A1 A1 67 0F 03 00
2C 04 01 20 15 11 40 09 00 00 00 94 2B E3 1D F6

This message format is exactly the same as a PEER type of message, except that the addresses shown will be in ATCS format.

An example of destination and source ATCS address bytes is:

78 A2 A1 A1 A1 AA A1 78 A2 A1 A1 A1 A1 A1

The other difference is the second byte after the F5 message byte. In the example above, the byte is EE. This byte field is known as the Address Length Byte and contains two HEX digits. Each HEX digit in the Address Length Byte represents the length in HEX digits of the destination and source addresses. In our example, both HEX digits are E, so this translates to 14 decimal. This means the destination and source ATCS addresses are 14 HEX digits in length.

For the PEER type of message, the destination and source address length is always fixed at two bytes each, and so the Address Length Byte value 22 is not shown on the display, but is assumed.

MASTER COPY

5.5. Power Calculation View

On the main menu launch screen (Figure 5-1) click the "CardFile/Power Calculation" button which is to the right of center in the fourth row of buttons from the top of the screen. This is the "OffLine Tools" row.

The Power Calculation View (Figure 5-7) is the latest version of the Power Calculation Spreadsheet. It shows the current draw for a particular board configuration. This view enables the user to enter the number of boards to be used for a specific power supply, and the specific Input/Output which is active on a particular board. For example, the IN8OUT8 board can be defined with four inputs and four outputs. This affects the power calculation differently than defining eight inputs and eight outputs.

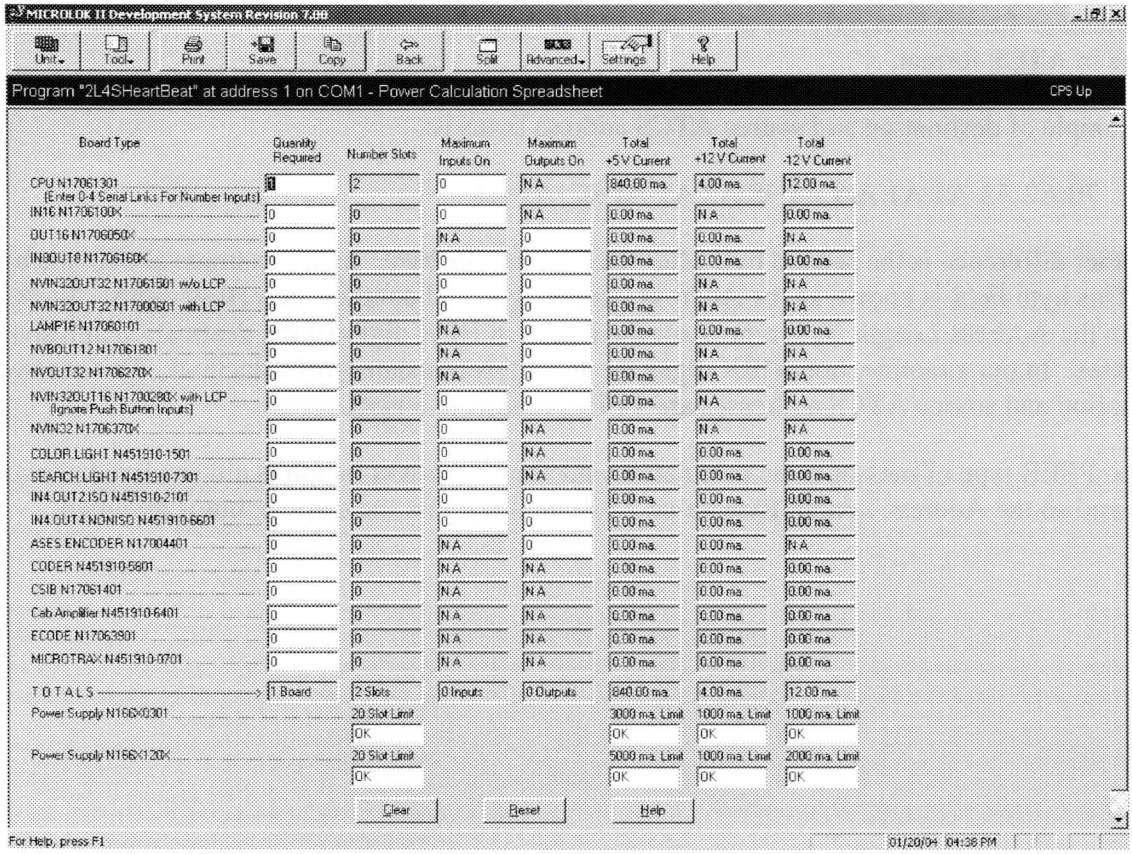

Figure 5-7 - Power Calculation View

Two power supplies are used for these calculations (PN N166X0301 and N166X120X, where X can have multiple values depending on the particular model). Power Supply N166X120X was introduced in Version 7.00 of the Development System. There is a 20-slot limit for each power supply. There are three current types defined on this spreadsheet: +5 Volts, +12 Volts, and –12 Volts. They are the presented in the last three columns on the spreadsheet. For power supply N166X0301, the milliamp limits for the listed currents are 3000, 1000, and 1000, respectively. For power supply N166X120X, the milliamp limits for the listed currents are 5000, 1000, and 2000, respectively.

MASTER COPY

5.6. System Configuration

Click on the button labeled System Configuration button in the center of the third row of the main menu launch screen (Figure 5-1). This will open the System Configuration Launch Window (Figure 5-8).

For this particular application, there are two MICROLOK II Network Protocol links defined. The first button from the left represents the link named MII_PEER_1 and the second button from the left represents the link named MII_PEER_2. As shown in the figure, a tooltip is displayed when the cursor hovers above a button. To enter the Link Configuration for a link, simply click on the appropriate button.

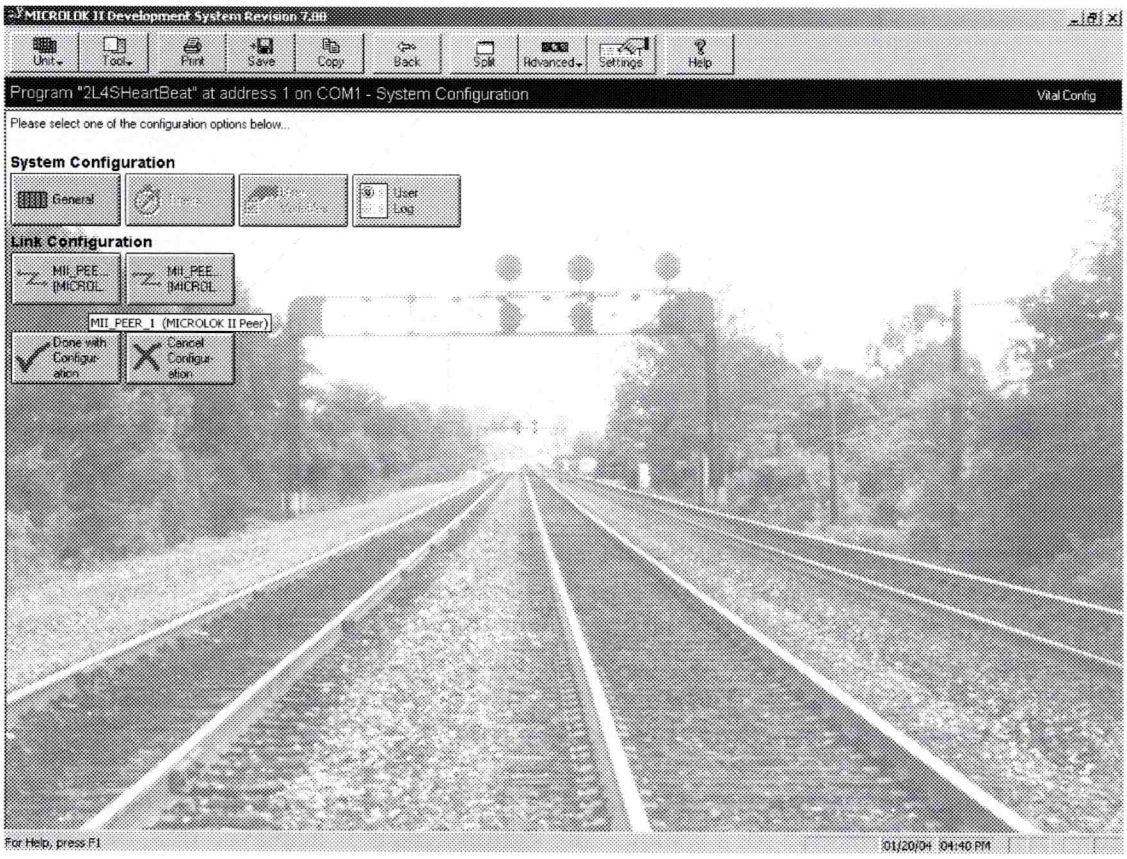

Figure 5-8 - System Configuration Launch Screen

Figure 5-9 displays the configuration parameters for a MICROLOK II Peer link named "MII_PEER_1". The first section displays the main link parameters and the second section displays a list of all the stations defined for the link. In this case, there are two stations defined.

MASTER COPY

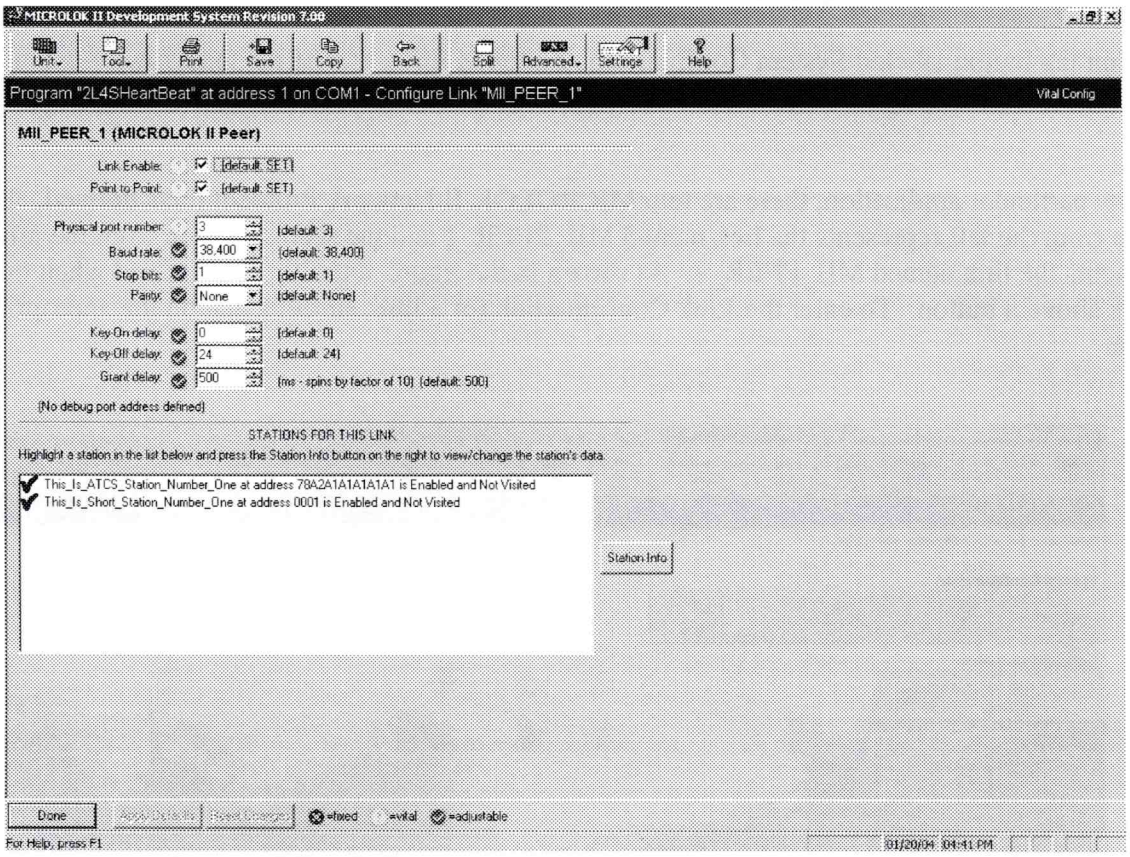

Figure 5-9 - M II Network 1 Screen

The parameters on this screen can be changed using normal Windows controls, and are consistent with the rest of the Development System. To change the Link Enable or Point to Point parameters, use the check box and simply check or uncheck the box. To change the Physical Port Number or Stop Bits parameters, use the up and down arrows. To change the Baud Rate or Parity parameters, use the drop down list box and select a number. The Apply Defaults, Reset Changes, and Done buttons on the lower bar behave exactly the same way as on the other configuration screens.

The white box below the link parameters contains the station information for this link (Figure 5-10). Each row represents information for a station. The station's name is displayed first, the station's address, whether the station is enabled or not, and then the station's status. Note that the station address can be shown in either short or long format, depending if the address is of type PEER or ATCS. A station's status can be one of four conditions: Not Visited, Visited, Data Changed, or Disabled. The station status "Not Visited" means the configuration screen for a station has never been looked at by the user and is represented by a blue checkmark icon on the left side of the row. In Figure 5-10, two enabled stations are displayed as defined in the application program. One station has an ATCS address and the other one, a PEER address. Both have a blue checkmark icon which means the station configuration has not been looked at (Not Visited) for these enabled stations.

MASTER COPY

There are two ways to enter the configuration screen for a particular station. The first way is to double-click a station's line of text. The second way is to select a station and then click on the Station Info button on the right side of the window. Only one station can be viewed at a time.

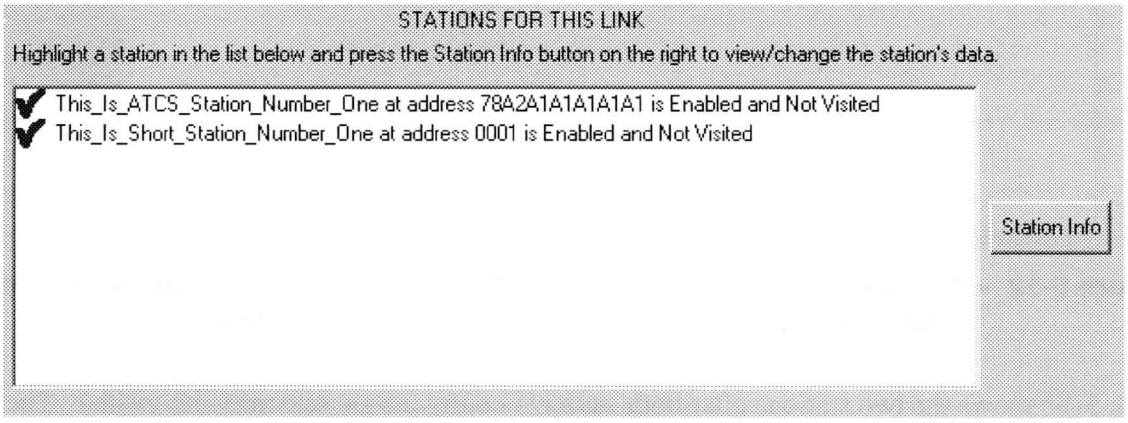

Figure 5-10 - Link Station Information

Figure 5-11 shows the two stations after the first station's configuration screen was visited. The status "Visited" means that the user viewed the contents of the station's configuration parameters but did not change anything. It refers to a read-only mode by the user. The status "Visited" is shown in the text defining the station. The second station remains unchanged since the user has not visited that station's configuration parameters yet. Its line of text indicates "Not Visited".

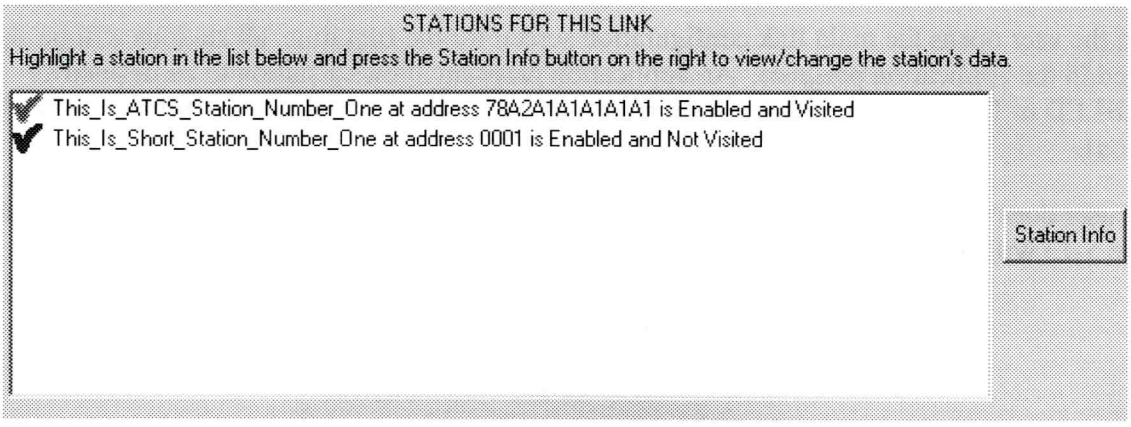

Figure 5-11 - Station Information Window Indicating the First Station Has Been Visited

MASTER COPY

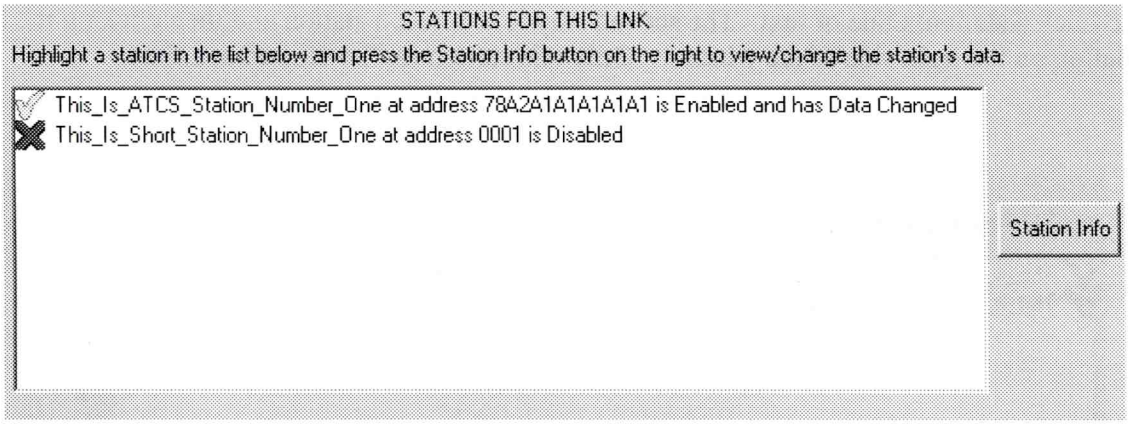

Figure 5-12 - Station Information Window Indicating the First Station Is Enabled and Data Has Changed and the Second Station Is Disabled.

Figure 5-12 shows the two stations after both station's configuration screens were visited. The first station's status "Data Changed" means that the user viewed the contents of the station's configuration parameters and made one or more changes. For example, the user could have made a change to the Acknowledge Timeout parameter. The status "Data Changed" is shown in the text associated with that station.

The second station's status "Disabled" means that the user viewed the contents of the station's configuration parameters and unchecked the Station Enable parameter. The user may or may not have changed other station configuration parameters, but did change the Station Enable parameter to disabled. The status "Disabled" is represented by an X icon to the left side of the line of text. (The station will also be disabled if it is unchecked.).

When the user opens the main link configuration screen for the first time, all stations will be shown as defined in the application program. An application program allows a station to be defined as ENABLED or DISABLED. Thus, a station's status will either be Enabled and Not Visited or Disabled (X icon).

If the user does not select a station but just clicks on the Station Info button, the message box shown in Figure 5-13 will appear.

Figure 5-13 - User Reminder Message

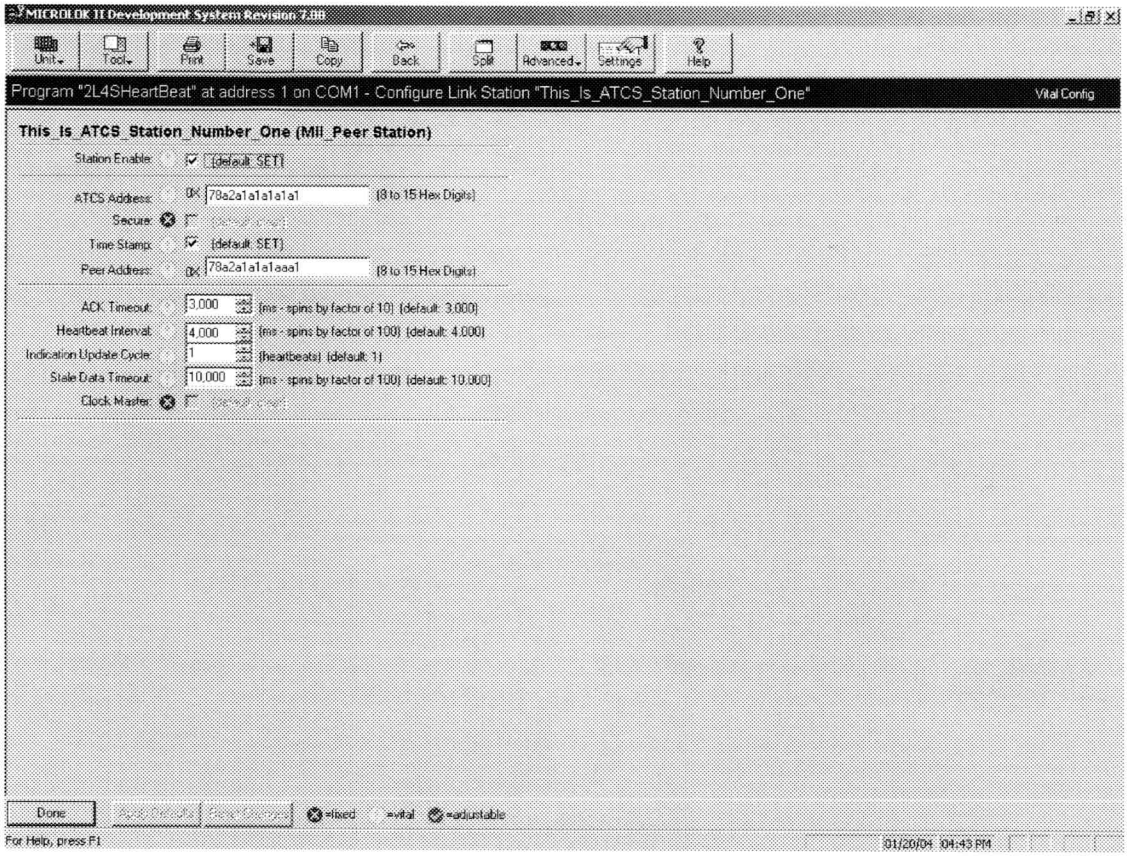

Figure 5-14 - Station Configuration Parameters

Figure 5-14 displays the configuration parameters for one station on a MICROLOK II Peer link. This station is named "This_Is_ATCS_Station_Number_One". The parameters for this station are listed on the screen.

The parameters on this screen can be changed using normal Windows controls, and are consistent with the rest of the Development System. To change the Station Enable parameter, simply check or uncheck the box. To change the ACK Timeout or Heartbeat Interval parameters, use the spin control (up and down arrows). To change the address of this station or its peer address, use the edit box. The Apply Defaults, Reset Changes and Done buttons on the lower bar behave exactly the same way as on the other configuration screens.

After the user is done viewing or changing the station parameters and clicks on the Done button, the system returns to the Main Launch Menu (Figure 5-1).

MASTER COPY

MASTER COPY

6. Parts List

Table 6-1 lists the various hardware and software components used in the MICROLOK II Network Protocol System

Table 6-1 - MICROLOK II Network Protocol System Components

Hardware		
Item	**Part Number**	
Hub	N16906701	
NIA	N16909501	
Power Supplies	N166X0301	
.	N166X120X	
Cables		
Item	**Length**	**Part Number**
Cable, RS232, NIA Client 1 port to MICROLOK II port 3 (as RS232) or port 4, DB9 to OPEN	6 feet	N16914506
	15 feet	N16914515
	30 feet	N16914530
Cable, RS232, NIA Client 1 port to HUB (as RS232/RS423), DB9 to DB9	6 feet	N16914606
	15 feet	N16914615
	30 feet	N16914630
Cable, RS232, NIA Console port to Personal Computer Comm port, DB9 to DB9	6 feet	N16914706
	15 feet	N16914715
	30 feet	N16914730
Cable, RS485, HUB (as RS485) to MICROLOK II port 1 or port 2, DB9 to OPEN	6 feet	N16914806
	15 feet	N16914815
	30 feet	N16914830
Cable, RS232/RS423, HUB (as RS232/RS423) to MICROLOK II port 3 (as RS232/RS423) or port 4, DB9 to OPEN	6 feet	N16914906
	15 feet	N16914915
	30 feet	N16914930
Software		
Item	**Part Number**	
Peer Executive		
Revision	N451232-1721	
Peer Development System		
Revision	N451232-1722	
Peer Maintenance Tool		
Revision	N451232-1723	

MASTER COPY

MASTER COPY