invensys® rail group
WESTINGHOUSE®
rail systems australia

invensys® rail group
WESTINGHOUSE®
rail systems india

WESTRACE

First-Line Maintenance Manual

We deliver. We go further.

Westinghouse Rail Systems Australia
ABN 78 000 102 483
179–185 Normanby Rd
(Locked Bag 66)
South Melbourne
Victoria 3205
Australia
P +61 3 9233 8888
F +61 3 9233 8702
E wrsa@wrsa.com.au
W http://www.wrsa.com.au

Invensys Rail Systems India Pvt Ltd
No. 112 & 114 Raheja Chambers
12 Museum Road
Bangalore 560 001
India
P +91 80 3058 8763/64
F +91 80 3058 8765
E rail.enquiries@invensysrail.com
W http://www.wrsi.in

WESTRACE

First-Line Maintenance Manual

Document CI: **WRTOFLMM**

Issue: **10.0**

Date of Issue: **10 February 2009**

Change History:

Issue	Date	Comment	Changed	Checked	Approved
1.0	7/9/94	WRTFGEN. initial issue			
2.0	4/4/96	WRTFGEN, CR273			
3.0	30/10/96	WRTFGEN, CR319			
1.0	16/11/94	WETFWAYE, initial release			
2.0	17/12/96	WETFWAYE, CR1385, CR1728, WR348, WR349, WR350			
4.0	1/9/00	WRTOFLMM, initial issue. Compiled from WRTFGEN 3.0 and WETFWAYE 2.0 CR333, 334, 379, 394, 395, 402, 404, 405, 406, 407, 440, 454, 502, 515	PGB		
5.0	3/8/01	Rebuilt to correct faulty 4.0 build	PGB		
6.0	20/2/03	CR 783, 789, 790	PGB		
7.0	11/10/04	CR831	ML	DJ	WMcD
8.0	12/9/05	CR325, 340, 345, 372, 378	ML	SR	WMcD
9.0	29/1/07	CR423, 428, 433	ML	SR	WMcD
10.0	10/2/09	Updated branding	ML	ML	WMcD

Controlled Copy Number:

Controlled Copies are identified by a Controlled Copy Number that must be inserted in red handwriting. Any copy not meeting this criterion is considered to be uncontrolled and may not be the current version.

Copyright

This document is protected by Copyright and all information contained therein is confidential. The contents of this document must not be copied and the information therein must not be used, or disclosed except with the written permission of and in the manner permitted by Westinghouse Rail Systems Australia Pty Ltd.

Copyright © 2009 Westinghouse Rail Systems Australia Pty Ltd ABN 78 000 102 483

PREFACE

This is the First-Line Maintenance Manual for WESTRACE Vital Signalling Equipment and WESTECT ATP Wayside equipment.

It is applicable to:

- WESTRACE Vital Signalling Systems;
- WESTECT Encoders;
- combined WESTRACE interlocking WESTECT Encoders.

SAFETY

WARNING

WESTRACE is a safety critical system.

Any maintenance of the WESTRACE equipment that does not conform to the requirements of this manual could compromise safety.

TABLE OF CONTENTS

CHAPTER PAGE

1 Introduction

1.1 New in This Issue 1-1
1.2 Purpose of the Manual 1-1
1.3 Audience 1-1
1.4 Scope of the Manual 1-1
1.5 References 1-2
1.6 Relationship with Other Manuals 1-4
1.7 Organisation of This Manual 1-5
1.8 Conventions 1-6
1.9 Terminology 1-6
1.10 Personal Safety 1-7

2 WESTRACE, WESTECT and Safety

2.1 WESTRACE 2-1
2.1.1 What is WESTRACE? 2-1
2.1.2 WESTRACE Philosophy 2-2
2.1.3 Safety Methodology 2-2
2.1.3.1 General 2-2
2.1.3.2 How WESTRACE Achieves Safety 2-2
2.2 WESTECT 2-3
2.2.1 What is WESTECT? 2-3
2.2.2 WESTECT Philosophy 2-4
2.2.3 Safety Methodology 2-4

3 System Description

3.1 Introduction 3-1
3.2 WESTRACE System 3-1
3.3 System Power Requirements 3-3
3.4 Output Power Control Relay (OPCR) 3-3
3.5 Hot Stand-by 3-4
3.6 Vital Communication 3-4
3.7 Non-vital Communications 3-4
3.8 WESTECT Encoders 3-5
3.8.1 WESTECT Communication Module (WCM) 3-5
3.8.2 Communications Rack 3-5
3.9 WESTECT Remote Radio Installations 3-6
3.10 WESTECT Adjacent Interlockings 3-6

4 System Configuration

4.1 Vital Telemetry 4-1
4.2 Radio Frequency 4-1
4.3 Configurable Modules 4-1
4.4 Installation Addresses 4-1

5 WESTRACE Operating Characteristics

5.1 Start Up Sequence 5-1
5.2 Normal Working 5-6
5.2.1 LEDs 5-6
5.2.2 Graceful Degradation 5-6
5.2.3 OPCR Exercise 5-6

6 Maintenance

6.1 Equipment Handling 6-1
6.1.1 Anti-Static Protection 6-1
6.1.2 Packing 6-1
6.1.3 Storage 6-2
6.1.4 Transport 6-2
6.1.5 Lithium Batteries 6-2
6.2 Power Up and Down 6-3
6.3 Service 6-4
6.3.1 Routine Maintenance 6-4
6.3.1.1 Connections & Cable 6-4
6.3.1.2 Earthing 6-4
6.3.1.3 Power Supply 6-4
6.3.1.4 Operating Environment 6-4
6.3.1.5 Exercise OPCR 6-4
6.3.1.6 Replace Lithium Battery 6-5
6.3.2 Downloading Non-vital Configuration to NVLM 6-5
6.3.3 Replacement of Faulty Modules 6-5
6.3.4 Replacement of PFMs 6-6
6.3.5 Module Repair 6-7
6.3.6 Reporting of WESTRACE Faults 6-7
6.3.7 Return to Service after Maintenance 6-7
6.4 Disposal 6-7

7 Fault Conditions and Errors

7.1 Reading Fault Codes 7-1
7.2 Fault Finding 7-3
7.3 Faults During Start-Up 7-7
7.4 Faults During Normal Working 7-9

8 WESTECT Communication Equipment—Fault Finding

8.1 Introduction 8-1
8.2 Equipment 8-1
8.3 System 8-1
8.3.1 Fault Finding 8-1
8.3.2 Power Supply 8-3
8.3.3 Connections & Cable 8-3
8.3.4 Earthing 8-3
8.4 Communication Housing Removal & Replacement 8-3
8.5 Radio & Control Module 8-4
8.5.1 Checking 8-4
8.5.2 Removal & Replacement 8-4
8.6 Radios 8-4
8.6.1 Checking 8-4
8.6.2 UHF Radios—Removal Replacement 8-5
8.7 Antenna System 8-6
8.8 Verification of Transmissions 8-9
8.8.1 Data Checking 8-9
8.8.2 Coverage 8-9

9 WESTECT Transponders—Fault Finding and Replacement

9.1 Introduction 9-1
9.2 Equipment 9-1
9.3 System 9-1
9.4 Faulty Link Transponders 9-1

9.5 Personal Safety 9-2
9.6 Checking Transponders 9-2
9.7 Programming 9-3
9.8 Installation 9-4
9.9 Verification 9-4

Appendix A—Module Descriptions

A.1 Vital Logic Module (VLM6) A-2
A.1.1 VLM6 Description A-2
A.1.1.1 VLM6 Vital Logic Card (VLC6) Description A-2
A.1.1.2 VLM6 Output Power Card (OPC) Description A-3
A.1.1.3 VLM6 Universal Hot Standby Vital Backplane Card (UHVBC) Description A-3
A.1.2 VLM6 Configuration A-4
A.1.2.1 VLM6 Vital Logic Card (VLC6) Configuration A-4
A.1.2.2 VLM6 Output Power Card (OPC) Configuration A-6
A.1.2.3 VLM6 Universal Hot Standby Vital Backplane Card (UHVBC) Configuration A-6
A.1.3 VLM6 Indications A-6
A.1.3.1 VLM6 Vital Logic Card (VLC6) Indications A-6
A.1.3.1.1 Start Up Indications A-6
A.1.3.1.2 Operation Indications A-6
A.1.3.1.3 Fault Codes A-7
A.1.3.2 VLM6 Output Power Card (OPC) Indications A-13
A.1.3.3 VLM6 Universal Hot Standby Vital Backplane Card (UHVBC) Indications A-14
A.1.4 VLM6 External Connections A-14
A.2 Vital Logic Module (VLM5) A-15
A.2.1 VLM5 Description A-15
A.2.1.1 VLM5 Vital Logic Card (VLC5) Description A-15
A.2.1.2 VLM5 Output Power Card (OPC) Description A-16
A.2.1.3 VLM5 Hot Standby Vital Backplane Card (HVBC) Description A-16
A.2.2 VLM5 Configuration A-17
A.2.2.1 VLM5 Vital Logic Card (VLC5) Configuration A-17
A.2.2.2 VLM5 Output Power Card (OPC) Configuration A-19
A.2.2.3 VLM5 Hot Standby Vital Backplane Card (HVBC) Configuration A-19
A.2.3 VLM5 Indications A-19
A.2.3.1 VLM5 Vital Logic Card (VLC5) Indications A-19
A.2.3.1.1 Start Up Indications A-19
A.2.3.1.2 Operation Indications A-19
A.2.3.1.3 Fault Codes A-19
A.2.3.2 VLM5 Output Power Card (OPC) Configuration A-31
A.2.3.3 VLM5 Hot Standby Vital Backplane Card (HVBC) Configuration A-31
A.2.4 VLM5 External Connections A-31
A.3 Hot Standby Vital Logic Module (HVLM128) A-33
A.3.1 Description A-33
A.3.1.1 Hot Standby Vital Logic Card (HVLC) A-33
A.3.1.2 Output Power Card (OPC) A-34
A.3.1.3 Hot Standby Vital Backplane Card (HVBC) A-34
A.3.2 Configuration A-35
A.3.2.1 Hot Standby Vital Logic Card (HVLC) A-35
A.3.2.2 Output Power Card (OPC) A-37
A.3.2.3 Hot Standby Vital Backplane Card (HVBC) A-37
A.3.3 Indications A-37
A.3.3.1 Hot Standby Vital Logic Card (HVLC) A-37
A.3.3.1.1 Start Up Indications A-37
A.3.3.1.2 Operation Indications A-37
A.3.3.1.3 Fault Codes A-37

A.3.3.2 Output Power Card (OPC) A-49
A.3.3.3 Hot Standby Vital Backplane Card (HVBC) A-49
A.3.4 External Connections A-50
A.4 Vital Logic Module (VLM1) A-51
A.4.1 Description A-51
A.4.1.1 Vital Logic Card (VLC) A-51
A.4.1.2 Configuration Element Card (CEC) A-51
A.4.1.3 Output Power Card (OPC) A-52
A.4.1.4 Vital Backplane Card (VBC) A-52
A.4.2 Configuration A-52
A.4.2.1 Vital Logic Card (VLC) A-52
A.4.2.2 Configuration Element Card (CEC) A-52
A.4.2.3 Output Power Card (OPC) A-53
A.4.2.4 Vital Backplane Card (VBC) A-53
A.4.3 Indications A-53
A.4.3.1 Vital Logic Card (VLC) A-53
A.4.3.1.1 Start Up Indications A-53
A.4.3.1.2 Operation Indications A-53
A.4.3.1.3 Fault Codes A-53
A.4.3.2 Configuration Element Card (CEC) A-60
A.4.3.3 Output Power Card (OPC) A-60
A.4.3.4 Vital Backplane Card (VBC) A-60
A.4.4 External Connections A-60
A.5 Vital Lamp Output Modules (VLOM) A-62
A.5.1 Description A-62
A.5.2 Particulars A-62
A.5.3 Characteristics of VLOM 110 A-62
A.5.4 Function A-62
A.5.5 Configuration A-63
A.5.6 Indications A-63
A.5.6.1 Start Up A-63
A.5.6.2 Operation A-63
A.5.6.3 Fault Codes A-63
A.5.7 External Connections A-66
A.6 Vital Relay Output Modules (VROM) A-68
A.6.1 Description A-68
A.6.2 Particulars A-68
A.6.3 Characteristics of VROM 50 A-68
A.6.4 Function A-68
A.6.5 Configuration A-68
A.6.6 Indications A-69
A.6.6.1 Start Up A-69
A.6.6.2 Operation A-69
A.6.6.3 Fault Codes A-69
A.6.7 External Connections A-72
A.7 Vital Parallel Input Modules (VPIM) A-74
A.7.1 Description A-74
A.7.2 Particulars A-74
A.7.3 Characteristics of VPIM 50 A-74
A.7.4 Function A-74
A.7.5 Configuration A-74
A.7.6 Indications A-74
A.7.6.1 Start Up A-74
A.7.6.2 Operation A-75
A.7.6.3 Fault Codes A-75
A.7.7 External Connections A-77

A.8 Vital Telemetry Continuous Module (VTC) A-78
A.8.1 Description A-78
A.8.2 Particulars A-78
A.8.3 Function A-78
A.8.4 Configuration A-79
A.8.5 Indications A-79
A.8.5.1 Start Up A-79
A.8.5.2 Operation A-79
A.8.5.3 Fault Codes A-79
A.8.6 External Connections A-81
A.9 Enhanced Vital Telemetry Continuous Module (EVTC) A-83
A.9.1 Description A-83
A.9.2 Particulars A-83
A.9.3 Function A-83
A.9.4 Configuration A-84
A.9.5 Indications A-84
A.9.5.1 Start Up A-84
A.9.5.2 Operation A-84
A.9.5.3 Fault Codes A-85
A.9.6 External Connections A-87
A.10 WESTECT Communications Module (WCM) A-88
A.10.1 Description A-88
A.10.2 Particulars A-88
A.10.3 Function A-88
A.10.4 Configuration A-88
A.10.5 Indications A-89
A.10.5.1 Start Up A-89
A.10.5.2 Operation A-89
A.10.5.3 Fault Codes A-89
A.10.6 External Connections A-91
A.11 Network Communication Diagnostic Module (NCDM) A-92
A.11.1 Description A-92
A.11.2 Particulars A-93
A.11.2.1 Circuit Boards A-93
A.11.2.2 External Ports A-93
A.11.2.3 Serial Control System Ports or Network Control System Sessions A-94
A.11.2.4 Serial Diagnostic Ports or Network Diagnostic Sessions A-95
A.11.2.5 Production Port A-96
A.11.2.6 Serial Power Supply A-96
A.11.2.7 Installation Status A-96
A.11.3 Function A-96
A.11.4 Operation A-97
A.11.4.1 Selecting Maintenance Mode A-97
A.11.4.2 Selecting Production Mode A-98
A.11.5 Configuration A-98
A.11.5.1 Hardware Settings A-98
A.11.5.2 Non-vital Configuration A-100
A.11.5.3 Replacing the NCDM A-101
A.11.5.4 Battery Installation A-105
A.11.6 Indications A-107
A.11.6.1 Network Communication Diagnostic Card LEDs A-107
A.11.6.2 NCD PFM LEDs A-108
A.11.6.3 Alphanumeric Display A-108
A.11.6.4 Start Up A-109
A.11.6.5 Operation A-110

A.11.6.6 Fault Detection A-110
A.11.6.6.1 WESTRACE Module Faults A-110
A.11.6.6.2 NCDM Faults A-111
A.11.6.7 Fault Codes A-111
A.11.6.7.1 Port Faults A-112
A.11.6.7.2 Module or Session Faults A-113
A.11.6.7.3 Internal faults A-115
A.11.7 External Connections A-119
A.11.7.1 Serial Power Connector A-119
A.11.7.2 Installation Status Connector A-120
A.11.7.3 Serial Connectors A-120
A.11.7.4 Network Connector A-121
A.11.7.5 INCL Connector A-121
A.11.7.6 Production Port A-121
A.11.7.7 Cabling Details A-122
A.11.7.8 Connecting a Diagnostic System A-123
A.12 Non-vital Communications and Diagnostic Module (NVC/DM) A-125
A.12.1 Description A-125
A.12.2 Particulars A-125
A.12.2.1 Circuit Boards A-125
A.12.2.2 External Ports A-126
A.12.2.3 Production Port A-127
A.12.2.4 Serial Power Supply A-127
A.12.3 Function A-127
A.12.4 Operation A-128
A.12.4.1 Selecting Maintenance Mode A-128
A.12.4.2 Selecting Production Mode A-129
A.12.5 Configuration A-129
A.12.5.1 Hardware Settings A-129
A.12.5.2 Non-vital Configuration A-130
A.12.5.3 Replacing the NVC/DM A-131
A.12.5.4 Battery Installation A-136
A.12.6 Indications A-137
A.12.6.1 Logic Evaluation Card LEDs A-137
A.12.6.2 Communications Interface Module LEDs A-137
A.12.6.3 Alphanumeric Display A-138
A.12.6.4 Start Up A-139
A.12.6.5 Operation A-139
A.12.6.6 Fault Detection A-139
A.12.6.6.1 WESTRACE Module Faults A-139
A.12.6.6.2 NVC/DM Faults A-140
A.12.6.7 Fault Codes A-141
A.12.6.7.1 Port faults A-141
A.12.6.7.2 Telemetry Address Faults A-142
A.12.6.7.3 Internal faults A-143
A.12.7 External Connections A-146
A.12.7.1 Serial Power Connector A-146
A.12.7.2 Diagnostic and Telemetry Serial Connectors A-146
A.12.7.3 Production Port A-147
A.12.7.4 Cabling Details A-148
A.12.7.5 Connecting a Diagnostic System A-149
A.13 Non-vital Communications Module (NVC) A-151
A.13.1 Description A-151
A.13.2 Particulars A-151
A.13.3 Function A-151

A.13.4 Configuration A-152
A.13.4.1 Slave Address A-152
A.13.4.2 System Bit A-152
A.13.4.3 Telfail A-152
A.13.4.4 Data Transfer Rate A-153
A.13.4.5 Data Word Length A-154
A.13.4.6 Modem A-154
A.13.4.7 Transmit Data Clock A-154
A.13.4.8 Unused A-154
A.13.5 Indications A-155
A.13.5.1 Start Up A-155
A.13.5.2 Operation A-155
A.13.5.3 Fault Codes A-155
A.13.6 External Connections A-157
A.13.6.1 RS232-C Connections A-157
A.13.6.2 RS422 Connections A-158
A.14 Diagnostic Module (DM) A-159
A.14.1 Description A-159
A.14.2 Particulars A-159
A.14.3 Function A-159
A.14.4 Operation A-159
A.14.5 Configuration A-160
A.14.5.1 Data Transfer Rate A-160
A.14.5.2 Battery Installation A-161
A.14.6 Indications A-161
A.14.6.1 Start Up A-161
A.14.6.2 Operation A-161
A.14.6.3 Fault Codes A-161
A.14.7 External Connections A-161
A.14.7.1 Event Recorder Interface A-161
A.14.7.2 Technician Interface A-162
A.14.7.3 Cabling Details A-163
A.15 Diagnostic Module 128 (DM128) A-164
A.15.1 Description A-164
A.15.2 Particulars A-164
A.15.3 Function A-164
A.15.4 Operation A-164
A.15.5 Configuration A-165
A.15.5.1 Data Transfer Rate A-166
A.15.5.2 Mnemonic Selection Default A-166
A.15.5.3 Command Echo Default A-166
A.15.5.4 Battery Installation A-166
A.15.6 Indications A-167
A.15.6.1 Start Up A-167
A.15.6.2 Operation A-167
A.15.6.3 Fault Codes A-167
A.15.7 External Connections A-167
A.15.7.1 Event Recorder Interface A-167
A.15.7.2 Technician Interface A-168
A.15.7.3 Cabling Details A-169
A.16 Power Supply Unit (PSU) A-170
A.16.1 Description A-170
A.16.2 Particulars A-170
A.16.3 Characteristics of PSU 24 A-170
A.16.4 Function A-170

A.16.5 Configuration A-170
A.16.6 Indications A-171
A.17 Protection and Filter Modules (PFMs) A-172
A.17.1 Description A-172
A.17.2 Configuration A-172
A.17.3 Indications A-172
A.18 VLE Backplane A-173
A.18.1 Description A-173
A.18.2 Configuration A-173
A.18.3 Indications A-173
A.19 Blanker Card A-174
A.19.1 Description A-174
A.19.2 Configuration A-174
A.19.3 Indications A-174
A.20 A-175
A.21 Housing Systems A-176
A.22 A-179

Appendix B—Diagnostic Module Technician Interface

B.1 General Description B-2
B.2 Event Recorder Interface B-2
B.2.1 CLEAR B-2
B.2.2 DATE_TIME B-3
B.2.3 EVENT B-3
B.2.4 FAULT B-3
B.2.5 MODULE B-4
B.2.6 VLE_DATA B-4
B.3 Technician Interface B-4
B.3.1 CLEAR B-5
B.3.2 CONFIGURATION B-5
B.3.3 DATE_TIME B-6
B.3.4 DISPLAY B-6
B.3.5 EVENT B-7
B.3.6 FAULT B-7
B.3.7 HELP B-8
B.3.8 MODULE B-8
B.3.9 PRINT B-9
B.3.10 VLE B-10

Appendix C—Diagnostic Module Logging Package

C.1 General Description C-2
C.2 Hardware Requirements C-2
C.3 Installation C-2
C.4 Running the Package C-2
C.5 Event Logging C-3
C.6 Commands C-4
C.6.1 ALT H C-4
C.6.2 ALT D C-4
C.6.3 ALT T C-4
C.6.4 ALT X C-4
C.6.5 Diagnostic Module Commands C-4

Appendix D—MoviolaW

D.1 General Description D-2
D.2 Installation and Hardware Requirements D-2
D.3 Operational Overview D-2
D.3.1 Real Time or Replay D-2
D.3.2 Faults and Failures D-3
D.3.3 Track Diagram D-3
D.3.4 Events Window D-4
D.3.5 Variables Window D-4
D.3.6 Faults Window D-4
D.3.7 Failures Window D-4
D.3.8 Operations Window D-5
D.3.9 Commands Window D-5
D.3.10 Reports Window D-5
D.3.11 Hardware Window D-6
D.3.12 Housing Window D-6
D.3.13 DM128 Driver Window D-6
D.4 Communication with NVC/DM or NCDM D-6
D.4.1 Passwords D-6
D.4.2 Dial Out Numbers for NVC/DM or NCDM D-7
D.4.3 NVC/DM Driver Window D-7
D.5 Telemetry Statistics for NVC/DM or NCDM D-7

Appendix E—GETLOG Utility

E.1 Introduction E-2
E.2 Operation E-2
E.2.1 Status Display E-2
E.2.2 Upload Display E-3
E.2.3 Menu Functions E-5
E.3 Command Line Parameters E-7
E.3.1 Mode Selection Options E-7
E.3.2 Functional Options E-7
E.3.3 File Output Options E-8
E.3.4 Link Configuration E-8
E.3.5 Protocol Configuration E-8

Appendix F—NGETLOG Utility

F.1 Introduction F-2
F.2 Operation F-2
F.2.1 Status Display F-2
F.2.2 Upload Display F-3
F.2.3 Menu Functions F-5
F.3 Command Line Parameters F-7
F.3.1 Mode Selection Options F-7
F.3.2 Functional Options F-8
F.3.3 File Output Options F-8
F.3.4 Link Configuration F-8
F.3.5 Protocol Configuration F-8

Appendix G—S2 Telemetry Modules

Appendix H—Communication Module Descriptions

H.1 Communications Rack **H-2**
H.1.1 Description H-2
H.1.2 Function H-2
H.1.3 Operation H-3
H.1.3.1 WESTECT Communication Module (WCM) H-3
H.1.3.2 Radio and Control Module (RCM) H-3
H.1.3.3 Radios H-4
H.1.4 Configuration H-5
H.1.4.1 Radio Channel H-5
H.1.4.2 Transmit Power H-5
H.1.5 Indications H-5
H.1.5.1 Start Up H-5
H.1.5.2 Operation H-6
H.1.5.3 Fault Codes H-6
H.2 Remote RCM **H-7**
H.2.1 Description H-7
H.2.2 Function H-7
H.2.3 Operation H-8
H.2.3.1 WESTECT WCM Module H-8
H.2.3.2 WESTECT Remote Radio and Communication Module H-8
H.2.4 Indications H-9
H.2.4.1 Start Up H-9
H.2.4.2 Operation H-9
H.2.4.3 Fault Codes H-9
H.3 **H-10**
H.4 Remote Communications Rack **H-11**
H.4.1 Description H-11
H.4.2 Function H-11
H.4.3 Operation H-12
H.4.3.1 WESTECT WCM Module H-12
H.4.3.2 WESTECT Radio and Control Module (RCM) H-12
H.4.3.3 Remote Communication Rack—Radios H-13
H.4.4 Configuration H-14
H.4.4.1 Radio Channel H-14
H.4.5 Indications H-14
H.4.5.1 Start Up H-14
H.4.5.2 Operation H-14
H.4.5.3 Fault Codes H-15
H.5 **H-16**

Appendix I—Repair Request Form

Glossary

LIST OF FIGURES

FIGURE		PAGE
1.1	WESTRACE and Related Manuals	1-4
1.2	WESTECT and Related Manuals	1-4
5.1	Start-up Timeline—HVLM128—Typical	5-2
5.2	Start-up Timeline—VLM5—Typical	5-3
5.3	Start-up Timeline—VLM6—Standalone—Typical	5-4
5.4	Start-up Timeline—VLM6—Hot Stand-by—Typical	5-5
7.1	Fault Diagnostic LEDs	7-2
7.2	Fault Diagnostic LEDs—Reading	7-2
7.3	Fault Finding Flow Chart (Part 1)	7-4
7.4	Fault Finding Flow Chart (Part 2)	7-5
7.5	Fault Finding Flow Chart (Part 3)	7-6
8.1	General Fault Finding Process	8-2
8.2	Reflected Power Meter—Inserting	8-7
8.3	ATP Radio Setup & Configuration Checklist	8-8
A.1	VLC6—Layout—VLM6	A-3
A.2	UHVBC—Rear Side View—VLM6	A-4
A.3	Typical GCSS Installation Reports and SW1 Settings—VLM6	A-5
A.4	External Connections—HOPC PFM—VLM6	A-14
A.5	Layout—VLC5—VLM5	A-16
A.6	HVBC—Rear Side View—VLM5	A-17
A.7	Typical GCSS Installation Reports and SW1 Settings—VLM5	A-18
A.8	External Connections—HOPC PFM—VLM5	A-32
A.9	Layout—HVLC—HVLM	A-34
A.10	Rear Side View—HVBC—HVLM	A-35
A.11	Typical GCSS Installation Reports and SW1 Settings—HVLM128	A-36
A.12	External Connections—HOPC PFM—HVLM	A-50
A.13	Layout—CEC—VLM1	A-51
A.14	General Arrangement from Rear—VBC—VLM1	A-52
A.15	Example SW1 Settings—CEC—VLM1	A-53
A.16	External Connections—OPC PFM—VLM1	A-61
A.17	External Connections—VLOM PFM—VLOM	A-67
A.18	External Connections—VROM PFM—VROM	A-73
A.19	External Connections—VPIM PFM—VPIM	A-77
A.20	External Connections—SIO232 PFM—VTC	A-81
A.21	External Connections—SIO232 PFM—EVTC	A-87
A.22	External Connections—SIO232 PFM—WCM	A-91
A.23	External Ports on the Two Styles of NCD PFM—NCDM	A-94
A.24	Configuration Switches and Jumpers—Mod D Rev 7 NCDC	A-98
A.25	Configuration Switches and Pushbuttons—Mod E Rev 8 NCDC	A-99
A.26	Separating the NCDC and VLC6	A-102
A.27	Setting Non-vital Configuration—Version 1 Example (Mod D Rev 7 NCDC shown)	A-103
A.28	Production Port—Connecting—NCDM	A-104
A.29	Lithium Battery—Two Connector Types—NCDM	A-106
A.30	User Interface—NCDC and VLM6—NCDM	A-107

A.31 User Interface—NCD PFM—NCDM A-108
A.32 Four Digit Alphanumeric Display—NCDM A-111
A.33 Alphanumeric Display—Port Fault—NCDM A-112
A.34 Alphanumeric Display—Module or Session Fault—NCDM A-114
A.35 Alphanumeric Display—Internal Fault—NCDM A-115
A.36 External Connectors on the Two Styles of NCD PFM—NCDM A-119
A.37 Cable Configuration Details—NCDM A-123
A.38 Configuration Switches and Jumpers—NVC/DM A-129
A.39 Removing a Card From the WESTRACE Housing A-131
A.40 CIMFIM With Four Daughter Boards—NVC/DM A-132
A.41 Separating the LEC and CIMFIM—NVC/DM A-133
A.42 Non-vital Configuration—Setting Version 1—NVC/DM A-134
A.43 Production Port—Connecting—NVC/DM A-135
A.44 Lithium Battery—NVC/DM A-136
A.45 User Interface—NVC/DM A-137
A.46 Four Digit Alphanumeric Display—NVC/DM A-141
A.47 Alphanumeric Display—Port Fault—NVC/DM A-141
A.48 Alphanumeric Display—S2 Address Fault—NVC/DM A-143
A.49 Alphanumeric Display—Internal Fault—NVC/DM A-143
A.50 External Connectors—CIMPM Card—NVC/DM A-146
A.51 Production Port—NVC/DM A-148
A.52 Cable Configuration Details—NVC/DM A-149
A.53 Configuration Switches—NVC A-152
A.54 Slave Address—Setting—NVC A-152
A.55 Clock Reconstruction Daughter Board—NVC A-153
A.56 External Connections—SIO232 PFM—NVC A-157
A.57 External Connections—SIO422 PFM—NVC A-158
A.58 RS422 Connector Pin Numbering—SIO422 PFM—NVC A-158
A.59 Layout—DM Module A-160
A.60 Configuration Switch—DM Module A-160
A.61 External Connections—SIO232 PFM—DM Module A-162
A.62 Interface Cable Configuration—DM Module A-163
A.63 Layout—DM 128 A-165
A.64 Links or SW1 Switches—Default Settings—DM128 A-165
A.65 External Connections—SIO232 PFM—DM128 A-168
A.66 Interface Cable Configuration—DM128 A-169
A.68 Single Housing System A-176
A.69 Two Housing System A-176
A.70 Three Housing System A-177
A.71 Four Housing System A-178
H.1 Block Diagram of Communication Housing H-2
H.2 Block Diagram of Communication Housing H-7
H.3 Block Diagram of Communication Housing H-11

List of Tables

Table		Page
3.1	Vital Logic Module—Components	3-2
8.1	Removal and Replacement—Communication Housing	8-3
8.2	Removal and Replacement—Radio and Control Module	8-4
8.3	Removal and replacement—UHF Radios	8-5
8.4	Removal and replacement—UHF Radios—Radio 1 Faulty	8-5
8.5	Removal and replacement—UHF Radios—Radio 2 Faulty	8-6
A1	CONF1, CONF2, LK25, LK26—Link Settings	A-6
A2	Fault Codes—Block—VLM6	A-7
A3	Fault Codes—Specific Initialisation—VLM6	A-11
A4	CONF1, CONF2—Link Settings	A-19
A5	Fault Codes—Block—VLM5	A-20
A6	Fault Codes—Specific Initialisation—VLM5	A-24
A7	Fault Codes—Specific Standby Mode—VLM5	A-26
A8	Fault Codes—Specific On-line—VLM5	A-28
A9	CONF1, CONF2—Link Settings	A-37
A10	Fault Codes—Block—HVLM	A-38
A11	Fault Codes—Specific Initialisation—HVLM	A-42
A12	Fault Code—Specific Standby Mode—HVLM	A-44
A13	Fault Codes—Specific On-line Mode—HVLM	A-46
A14	Fault Codes—VLM1	A-53
A15	Fault Codes—VLOM	A-63
A16	Fault Codes—VROM	A-69
A17	Fault Codes—VPIM	A-75
A18	Fault Codes—VTC	A-79
A19	DB25 Pinout—SIO232 PFM—VTC	A-81
A20	Fault Codes—EVTC	A-85
A21	DB25 Pinout—SIO232 PFM—EVTC	A-87
A22	Fault Codes—WCM	A-89
A23	DB25 Pinout—SIO232 PFM—WCM	A-91
A24	Port Number Allocation—NCDM	A-93
A25	Operating Modes—NCDM	A-97
A26	Switch Bank 2—Valid Settings—NCDM	A-100
A27	Start-up Display Sequence—NCDM	A-109
A28	Operation Indicators—Normal—NCDM	A-110
A29	Fault Codes—Port Codes in General—NCDM	A-112
A30	Fault Codes—Ext. Port—Module and Session—NCDM	A-113
A31	Fault Codes—Internal Port—NCDM	A-113
A32	Fault Codes—Module or Session—NCDM	A-114
A33	Fault Codes—Other—Module or Session—NCDM	A-114
A34	Fault Codes—Fatal—NCDM	A-115
A35	Fault Codes—Non-fatal—NCDM	A-116
A36	Fault Codes—Other (Not Displayed)—NCDM	A-118
A37	Serial Power Connector Pinout—NCD PFM—NCDM	A-119
A38	Installation Status Connector Pinout—NCD PFM—NCDM	A-120

A39 DB9 Pinout—RS232 Connection—NCD PFM—NCDM A-120
A40 DB9 Pinout—RS485 Connection—NCD PFM—NCDM A-120
A41 RJ45 Pinout—Network Connection—NCD PFM—NCDM A-121
A42 DB9 Pinout—Production Port—NCDM A-121
A43 Allocation of Port Numbers—NVC/DM A-126
A44 Operating Modes—NVC/DM A-128
A45 Switch Bank S2—Valid Settings—NVC/DM A-130
A46 Start-up Display Sequence—NVC/DM A-139
A47 Normal Operation Indicators—NVC/DM A-139
A48 Fault Codes—Port Codes in General—NVC/DM A-142
A49 Fault Codes—Port Codes—Other—NVC/DM A-142
A50 Fault Codes—S2 Address—NVC/DM A-143
A51 Fault Codes—Telemetry—Other—NVC/DM A-143
A52 Fault Codes—Fatal—NVC/DM A-144
A53 Fault Codes—Non-fatal—NVC/DM A-145
A54 Fault Codes—Other—NVC/DM A-145
A55 Serial Power Pinout—NVC/DM A-146
A56 DB9 Pinout—RS232 Connection—NVC/DM A-146
A57 DB9 Pinout—RS485 Connection—NVC/DM A-147
A58 DB9 Pinout—Production Port—NVC/DM A-148
A59 Data Transfer Rate—Setting—NVC A-153
A60 Data Word Length—Setting—NVC A-154
A61 Fault Codes—NVC A-155
A62 DB25 Pinout—SIO232 PFM—NVC A-157
A63 14-Way Ribbon Header Pinout—SIO422 PFM—NVC A-158
A64 DB25 Pinout—Event Recorder Interface—SIO232 PFM—DM Module A-162
A65 DB25 Pinout—Technician Interface—DM Module A-162
A66 Data Transfer Rate—Setting—DM128 A-166
A67 Mnemonic Language—Setting—DM128 A-166
A68 Echo Command—Setting—DM128 A-166
A69 DB25 Pinout—Event Recorder Interface—SIO232 PFM—DM128 A-168
A70 DB25 Pinout—Technician Interface—DM128 A-168
H1 Radio Channel Selection (TAIT Radios) H-4
H2 Radio Channel Selection (Motorola Radios) H-4
H3 Setting of Motorola Radio Power Output H-5
H4 Tait Radio Channel Selection H-13
H5 Motorola Radio Channel Selection H-14

1. INTRODUCTION

1.1 New in This Issue

This issue of the *WESTRACE First-Line Maintenance Manual* (Issue 10.0) contains the following changes:

- new NCDC—Mod E Rev 8 (section A.11.5);
- updates to Action column of VLM1, HVLM128, VLM5 and VLM6 fault codes 35–59.

1.2 Purpose of the Manual

This manual describes procedures for quickly and accurately diagnosing problems with WESTRACE Vital Signalling Systems and WESTECT Wayside ATP equipment and returning them to correct operation.

1.3 Audience

Maintenance personnel performing first-line maintenance on WESTRACE Vital Signalling Systems and WESTECT Wayside ATP equipment.

Maintenance personnel should:

- have a thorough understanding of railway operation rules and practices as applicable to first-line maintenance;
- have a working knowledge of personal computers and Microsoft Windows.
- be conversant with the personal safety requirements of section 1.10.

1.4 Scope of the Manual

This manual is limited to the identification and replacement of faulty WESTRACE and WESTECT wayside equipment.

Where WESTECT ATP is not installed, ignore the sections in this manual that mention WESTECT ATP.

1.5 References

The following information may be useful for system maintenance:

a) Specific installation details for the WESTRACE installation (GCSS printout).

   This information should be stored in the Signal Equipment Room. It includes:

   - all module configurations;
   - interface configurations;
   - addresses;
   - logic details, which includes:
     - module information;
     - input and output assignments;
     - latch and timer assignments.

b) Vital and non-vital interface circuits and mechanical drawings

   This information should be stored in the Signal Equipment Room.

The following WESTRACE manuals also provide relevant information. All are available from Invensys Rail Systems.

[SOM]	WESTRACE System Overview Manual, WRTOOVER: describes the WESTRACE system, what it is used for and what it consists of.
[APPM]	WESTRACE Application Manual, WRTOAPPM: describes the application design of a WESTRACE signalling system. It is the “how to” document that must be followed by system designers and installers.
[CS]	WESTRACE Configuration System User Manual, WRTOCS: describes the use and application of the Configuration Sub System (CSS) and Configuration Check Sub System (CCSS).
[CSS]	WESTRACE Configuration Sub-System User Manual, WRTOCSS: describes how to use the configuration tools for the programming and checking of VLM-based WESTRACE systems. This includes the configuration of the WESTECT Communications Module which may be installed in a WESTRACE system.
[CCSS]	WESTRACE Configuration Check Sub-System User Manual, WRTOCCSS: describes the use and application of the CCSS which is a DOS-based tool. CCSS is used to check that the correct application logic is installed in a VLM-based WESTRACE system.
[GCSS]	WESTRACE Graphical Configuration Sub-System User Manual, WRTOGCSS: describes how to use the configuration tools for the programming and checking of HVLM (and later) based WESTRACE systems. This includes the configuration of the WESTECT Communications Module which may be installed in a WESTRACE system.
[GSIM]	WESTRACE Graphical Simulator User Manual, WRTOGSIM: describes how to configure GSIM to test WESTRACE Installation logic. GSIM is a Microsoft Windows application that simulates the operation of WESTRACE logic and trackside equipment for the purpose of testing application data.

[MOV] MoviolaW User Manual, WRTOMOLA: describes how to set up and use MoviolaW to display and record the state of a WESTRACE system. MoviolaW is a suite of Windows-based diagnostic and recording tools for WESTRACE Vital Signalling Systems and other railway systems.

[ICS] WESTRACE Installation Check System User Manual, WRTO_ICS: describes the use and application of the ICS to check that the application logic is installed correctly in an HVLM (and later) based WESTRACE system.

[ISIM] WESTRACE Interlocking Simulator User Manual, WRTOISIM: describes how to set up the Interlocking Simulator to test WESTRACE application data and optionally non-vital control (Interlogic data) for railway signal interlockings.

[PCGE] WESTRACE PC Graphical Editor Manual. WRTOPCGE: describes how to set up and use the PCGE to create station layout diagrams for use with GSIM and MoviolaW.

[DRI] WESTECT ATP Drivers Manual. WETO_DRI: describes the use and operation of a WESTECT system from the drivers point of view.

[PRM] WESTECT Portable Radio Monitor User Manual. WETO_PRM: describes how to use the diagnostic tool provided for the checking of radio transmissions.

[PTM] WESTECT Portable Transponder Monitor User Manual. WETO_PTM: describes how to use the diagnostic tool for checking the programming and installation of transponders.

[CPSS] WESTECT Power Unit Configuration Sub-System User Manual. WETO_CPS: describes how to use the configuration tool for programming and checking the power unit specific data in train carried equipment.

[TDM] WESTECT Train Diagnostic Monitor User Manual. WETO_TDM: describes how to use the diagnostic tool for the retrieval and analysis of operational, configuration and error logging data.

[WFLM] WESTECT Train Carried Equipment First Line Maintenance Manual. WETO_FLM: describes the routine maintenance, fault finding, module replacement and testing of the WESTECT train-carried equipment.

[CTSS] WESTECT Transponder Configuration Sub-System User Manual. WETO_CTS: describes how to use the configuration tool for the programming and checking of transponders.

[WSOM] WESTECT ATP System Overview Manual. WETO_SOM: describes the Automatic Train Protection (ATP) and the particular features provided by WESTECT.

[SDM] WESTECT ATP System Design Manual. WETO_SDM: describes the rules and procedures that apply to designing a WESTECT ATP trackside system, the WESTECT train carried equipment or the WESTRACE application logic used by the system.

[S2MM] Westronic S2 Maintenance Manual. S2TF_MM: provides guidance for users with electronic and telemetry experience in fault finding and maintaining Westronic S2 telecommunications equipment.

1.6 Relationship with Other Manuals

Eight manuals describe and support the WESTRACE system. Each manual has a specific purpose and is available from Westinghouse Rail Systems Australia. Figure 1.1 shows the relationship between the WESTRACE manuals and other related manuals. These manuals are described in the WESTRACE System Overview Manual [SOM].

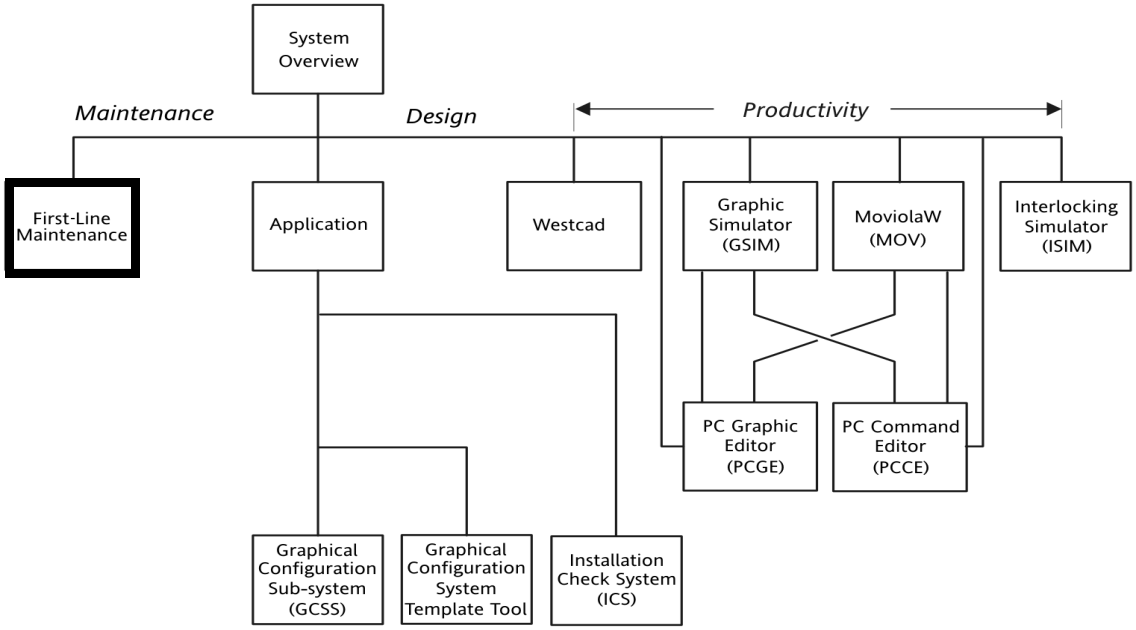

Figure 1.1: WESTRACE and Related Manuals

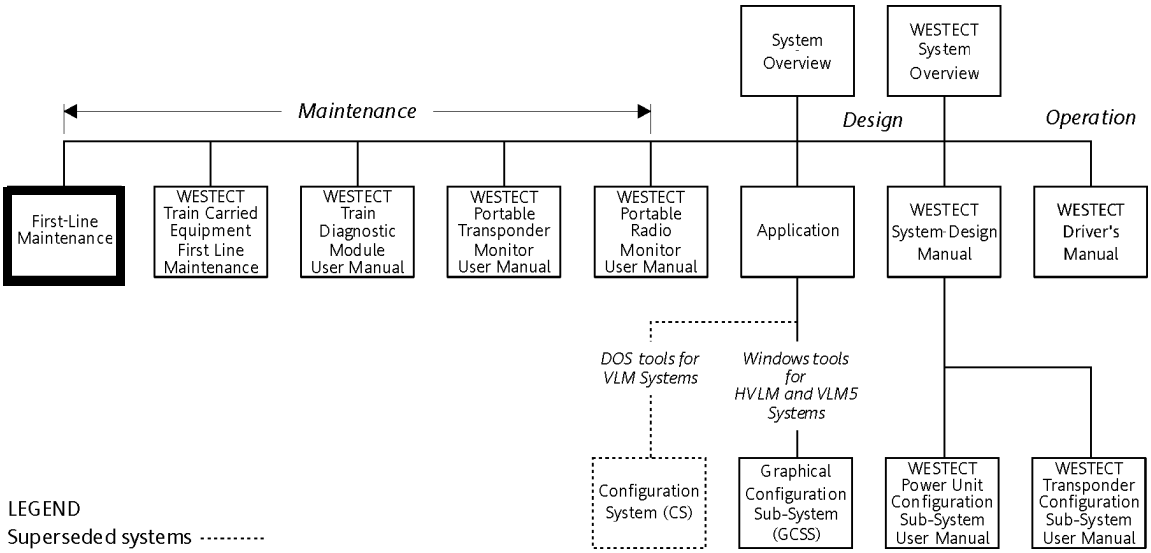

Figure 1.2: WESTECT and Related Manuals

1.7 Organisation of This Manual

This manual contains:

Chapter 1 *Introduction*—describes how this manual relates to the WESTRACE system.

Chapter 2 *WESTRACE, WESTECT and Safety*—describes the safety methodology of WESTRACE and WESTECT.

Chapter 3 *System Description*—provides an overview of typical WESTRACE and WESTECT installations.

Chapter 4 System Configuration—describes the configuration of WESTECT telemetry.

Chapter 5 WESTRACE Operating Characteristics—describes WESTRACE system operating characteristics in detail.

Chapter 6 *Maintenance*—describes basic procedures for maintaining WESTRACE.

Chapter 7 *Fault Conditions and Errors*—describes how to interpret error codes and how to handle typical fault conditions.

Chapter 8 *WESTECT Communication Equipment—Fault Finding*—provides guidance for finding faults in the communication equipment used to transmit WESTECT radio messages.

Chapter 9 *WESTECT Transponders—Fault Finding and Replacement*—describes first-line maintenance procedures for track mounted transponders associated with the WESTECT ATP system.

Appendix A *Module Descriptions*—describes the fundamental features of each WESTRACE module.

Appendix B *Diagnostic Module Technician Interface*—describes the fundamental features of the Diagnostic Module Technician Interface.

Appendix C *Diagnostic Module Logging Package*—contains details of the Diagnostic Module Logging Package.

Appendix D *MoviolaW*—contains an overview of using MoviolaW as a service tool for WESTRACE.

Appendix E *GETLOG Utility*—describes the use of the GETLOG utility in extracting logged data from an NVC/DM.

Appendix F *NGETLOG Utility*—describes the use of the NGETLOG utility in extracting logged data from an NVC/DM.

Appendix G *S2 Telemetry Modules*—describes the fundamental features of each WESTRONIC S2 Telemetry Module.

Appendix H *Communication Module Descriptions*—describes the fundamental features of the communication equipment used to transmit WESTECT radio messages.

Appendix I *Repair Request Form*—provides a WESTRACE Faulty Equipment Return Form that can be photocopied.

Glossary Provides a glossary of terms that may be encountered in WESTRACE manuals.

1.8 Conventions

This manual highlights important information as follows:

'Action Point'—identifies a task or a requirement for performing a task.

Note: ***'Note'—highlights important information.***

Caution: ***'Caution'—highlights the possibility of damage to equipment, but not necessarily danger to personnel when handling, operating or maintaining equipment.***

'Safety Warning'—highlights information relating to safety hazards. Failure to follow these warnings may lead directly or indirectly to serious equipment damage, or serious injury or death of personnel.

1.9 Terminology

The term VLM is used in a generic sense when referring to Vital Logic Modules. If the information is specific to a particular vital logic module, then the particular module will be mentioned.

At present, the following types of Vital Logic Module are in service:

- VLM1 (this module was previously known as VLM);
- HVLM128;
- VLM5;
- VLM6.

The term 'Diagnostic Module' is used in a generic sense. The particular diagnostic module is mentioned when the information is specific.

The term ‘Non-vital Configuration’ is used when discussing non-vital data that is downloaded to NCDM or NVC/DM modules. It equates to ‘CED’ when discussing older WESTRACE technology.

1.10 Personal Safety

Persons acting on the instructions in this manual should:

- have the required certification from the rail authority, including specific certification for working in electrified territory if appropriate;
- railway authority to access sites and access equipment.
- adhere to the railway authority safety requirements.

2. WESTRACE, WESTECT AND SAFETY

This chapter is an overview of the safety aspects of the WESTRACE and WESTECT systems.

Refer to following manuals for more details:

- WESTRACE System Overview Manual;
- WESTECT System Overview Manual.

2.1 WESTRACE

2.1.1 What is WESTRACE?

WESTRACE is a processor based vital signalling system, designed, manufactured and supplied by Invensys Rail Systems.

WESTRACE has three main components:

- Vital and Non-vital Logic Equipment or hardware;
- Graphical Configuration System (GCS) or Configuration System (CS) for the older systems;
- Maintenance support systems (eg MoviolaW).

The physical equipment component of WESTRACE comprises:

- A Vital Logic Module (VLM);
- An optional Non-Vital Logic Module (NVLM);
- A diagnostic module (not used when an NVLM is used);
- A number of serial and parallel input/output modules together with protection and filter modules;
- Equipment housings.

The modularity of WESTRACE allows configuration for almost any interlocking application, using the minimum number of modules. Accordingly, the system can be expanded as the application increases in size and complexity.

WESTRACE input and outputs are controlled by a set of boolean logic equations known as the Application Data (Vital PROM Data and the Non-vital Configuration).

Software Tools

The GCS and CS software tools comprise several software packages that run on a Personal Computer (PC). This software assists Signalling Engineers when designing, modifying and validating a WESTRACE installation. It also provides version control and verification of the Application Data which is particular to a WESTRACE installation.

2.1.2 WESTRACE Philosophy

WESTRACE is a safety critical processor based system intended for use as a railway signalling interlocking.

It:

- meets world standard safety levels (SIL4);
- features modularity;
- is easy to maintain;
- is robust, and;
- has cost advantages over conventional interlockings.

The system encompasses all of these features but safety is foremost.

2.1.3 Safety Methodology

2.1.3.1 General

WESTRACE equipment is suitable for safety critical applications. The general principle of system operation is to use two diverse methods of processing to ensure correct operation with respect to vital functions. This principle is implemented in both hardware and software processes to maximise the operational safety of the system.

The diversity principle is applied in each WESTRACE module in many ways, including:

- Storing all data as true and complement in two diverse forms;
- Utilising diverse true and complement data processing that is based on differently structured code;
- Checking hardware against software and vice versa;
- Continually testing hardware;
- Proving the correct operation of the microprocessor by checking against other modules in the system.

It is a primary safety requirement that all WESTRACE outputs are in appropriate states defined by the combination of:

- System inputs;
- Internally stored states;
- The logical relationship of system inputs and internally stored states as defined in the Application Data.

If WESTRACE detects an output in a state other than what is allowed by the above, it will attempt to render the output safe. The first attempt tries to positively disable the output but if the condition persists, the entire system may then be disabled.

2.1.3.2 How WESTRACE Achieves Safety

WESTRACE achieves safety in the following manner:

- All Vital Modules continuously perform self-testing. The purpose is to verify correct internal operation of the module. If a module detects

a problem within itself (or if the VLM detects a problem with a module), immediate negation (shutdown) of the system will occur;

- All Vital Modules continuously perform testing on adjacent Vital Modules to verify correct operation. This is known as *Health Monitoring*. If a module detects a problem with a neighbouring module it can immediately disable the entire system. For this reason, a WESTRACE system must comprise at least three vital modules; the VLM plus two other vital modules.
- All Vital data processing is performed by at least two diverse software processes.
- All Vital data is stored in two diverse forms. In addition, vital logical data is represented in a redundant manner within one of those forms.
- Failure of any system health check results in immediate system shutdown.

  The VLE:
  - isolates all Vital Communications Modules by removing the Vital Serial Enable Voltage (VSEV), and;
  - de-energises the Output Power Control Relay (OPCR).

    All Vital outputs of the system are thereby disabled and the system is in a known and safe state.

A more detailed description of WESTRACE safety is in the WESTRACE System Overview Manual.

2.2 WESTECT

2.2.1 What is WESTECT?

WESTECT is an ATP system for both trackside (encoder) and train-carried sub-systems. It is also designed and manufactured by Westinghouse Rail Systems Australia.

WESTECT uses a WESTRACE system with a special communication module and a radio system at key wayside locations (usually passing loops). The WESTECT housing is maintained identically to a standard WESTRACE system.

The additional wayside components of WESTECT covered by this manual are:

- Radio communications hardware;
- Transponders;
- Maintenance support systems (eg Portable Radio Monitor, Portable Transponder reader, transponder programmer).

WESTECT also uses passive transponders fixed to the sleepers that are not included in this manual.

Software Tools

WESTECT uses design tools in addition to those used by WESTRACE to develop transponder and radio data.

2.2.2 WESTECT Philosophy

WESTECT builds on the WESTRACE philosophy with an ATP system that minimises any impact on driving within the safety constraints.

2.2.3 Safety Methodology

How WESTECT Achieves Safety

Each trackside mounted WESTECT encoder generates a data message that is broadcast over the data radio system. The message is received by WESTECT equipped trains within the radio coverage area. The trackside data message is formulated and transmitted using WESTRACE principles. The integrity of the message is ensured by the encoding and decoding schemes and in no way relies on the radio data channel. Further, each trackside encoder has a unique address that is validated by the WESTECT equipped train before the message can be processed.

Track mounted transponders have a single message that is verified at encoding and is again verified by the WESTECT equipped train at the time of decoding. The WESTECT equipment carried by the train verifies the integrity of the data by performing a Cyclic Redundancy Check (CRC).

3. System Description

3.1 Introduction

There are more detailed descriptions of WESTRACE in the WESTRACE System Overview Manual and WESTECT in the WESTECT System Overview Manual.

A WESTRACE interlocking takes inputs, logically processes them according to application data provided by a signal engineer and safely control vital serial or parallel outputs.

The WESTECT ATP Encoder takes information from the interlocking of the state of main signal routes and converts this information in a WESTRACE system into combined proceed authorities and route entrance speeds which are broadcast by radio to all trains in the Encoder area.

This chapter briefly reviews the WESTRACE system and describes the particular wayside aspects of the WESTECT ATP system

3.2 WESTRACE System

WESTRACE is a modular vital interlocking system comprising modules, housings and racks. System designers combine individual modules into housings, housings into racks and may use multiple racks to build a total interlocking system. Designers also provide application logic for each rack and for communications between racks.

A multiple rack interlocking system:

- may be configured as a master-slave or peer-peer arrangement;
- will have communication links between the racks and usually to local or remote control centres and to diagnostic systems; Communication links are either Ethernet network or serial.

A rack can comprise one to four housings. Multiple housings are interconnected by special cables to extend the data bus (see Appendix A, section A.21).

Each housing has provision for a single power supply. Each housing can have its own power supply or special cables may be used to extend a power supply from one housing (usually the top housing) to other housings. The number of power supplies fitted depends upon the power requirements of the entire rack.

The top housing contains, by convention, contains;

- modules for vital logic processing (Vital Logic Module or VLM), and;
- optionally a non-vital logic processing and diagnostics module.

The VLM includes the:

- Vital Logic Card that is the systems central processing module;
- Output Power Card that is used to enable the modules' interfaces when the system is healthy;
- and in the case of the VLM1, a Configuration Element Card that it fitted with PROMs holding the vital application data.

The cards that comprise the VLM are interconnected by an additional motherboard known as the Vital Backplane Card.

WESTRACE systems can be built around different types of VLM, dependent on the requirements of the interlocking design. Table 3.1 summarises the cards and VBC required by each type of VLM (VLM6 is preferred).

Vital Logic Module (VLM)	Cards That Comprise the VLM			Vital Backplane Card
	Vital Logic Card	Output Power Card	Configuration Element Card	
VLM6	VLC6	OPC	-	UHVBC
VLM5	VLC5	OPC	-	HVBC or UHVBC
HVLM128	HVLC	OPC	-	HVBC or UHVBC
VLM1	VLC	OPC	CEC	VBC

Table 3.1: Vital Logic Module—Components

The VLM is always in the top housing. The remainder of the top housing and any other housing can be populated with specific functional modules. Each slot in the housing is physically identical but must be fitted with module intended by the designer. The system will not complete start up if the modules are not installed in their correct location (or not installed at all). Vacant slots must be fitted with a blanker card.

When fitted the:

- DM module must occupy slot 15 of the top housing;
- NVC/DM or NCDM must be immediately adjacent to the VLM;
  These modules comprise two cards and occupy two housing slots.

All external connections are through Protection and Filter Modules, or PFMs. There is generally one PFM per module. The PFMs provide secondary level filtering of conducted interference into and out of the housings.

Modules available for a WESTRACE system include:

- Vital Logic Module (VLM6, VLM5, HVLM128 and VLM1);
- Network Communications Module (NCDM);
- Non-vital Communications and Diagnostic Module (NVC/DM);
- Diagnostic Module (DM[1]);
- Vital Telemetry Continuous Module (VTC and EVTC);
- Vital Parallel Input Module (VPIM[1]);

- Vital Relay Output Modules (VROM[1]);
- Vital Lamp Output Modules (VLOM[1]);
- WESTECT Communication Module (WCM). Used when WESTRACE is part of a WESTECT system (see section 3.8);
- Protection and Filter Modules (PFM);
- Power Supply Unit (PSU).

These modules are discussed in Appendix A.

Please see reference [SOM] for further information about WESTRACE housings.

3.3 System Power Requirements

Every WESTRACE system requires a 24 Vdc uninterruptable power supply. This is usually taken from a float charged battery but may be taken from a dc/dc converter from an existing communication battery or other reliable source.

Most installations use separate power supply fuses for each housing although there is not requirement to do so.

Note: ***The top housing must be powered up either at the same time as the other housings or last.***

Most WESTRACE systems require:

- 50 Vdc signalling supply to power VROM modules and to input to VPIM modules;
- 110 Vac supply for the VLOM modules to power signalling lamps.

3.4 Output Power Control Relay (OPCR)

Every WESTRACE system that uses parallel output (VROM and VPIM) must have a vital Output Power Control Relay (and optional repeat relays) that will only provide power to the outputs when the system is proved healthy (either by controlling power input or individual outputs of the output modules).

Note: ***The power connection to these modules is shown on the system circuits included in the equipment rooms.***

Systems without parallel output may have a vital or non-vital Output Power Control Relay that is used as part of an automatic restart circuit after system shutdown.

1. There are sub-variants of these modules.

3.5 Hot Stand-by

WESTRACE systems may be stand alone or hot stand-by. Hot stand-by allows for automatic, nearly uninterrupted, change over to the stand-by system under manual command or triggered by on-line system failure.

Hot stand-by is always at a housing level. It requires two identical housings that are interconnected for fast data transfer and updates. It is quite acceptable for some housings in a system to be hot stand-by and others to be stand alone.

3.6 Vital Communication

WESTRACE can use vital communication between housings. This be through serial links between EVTC or VTC modules or via an Ethernet connection. Serial connections use identical cards at each rack. Ethernet connection is always via the NCDM module in the top housing.

Ethernet Serial communication is enabled by the Vital Serial Enable Voltage (VSEV) that is generated by the OPC when the system is deemed healthy.

All serial data is sent redundantly and is checked for corruption. Suspect messages are discarded. User viewable mnemonics show the state of the communication links.

Serial links can only operate over short distances without conditioning. Typically, serial link connections are:

- simple cable;
- PCM fibre optic telemetry, or;
- point to point modems.

These links may require special set up, including the line levels for modems.

Ethernet would typically be connected to a local hub or switch, or to an external network (routers, line interface, redundant links etc) to extend beyond the location.

Refer to the system diagrams at the installation for the communication architecture.

3.7 Non-vital Communications

WESTRACE can communicate to local or remote control centres and to diagnostic systems via serial links or Ethernet.

Serial data links may be:

- directly connected locally;
- connected into a fibre optic PCM telemetry (typical), or;
- point to multi-point modem telemetry system for interface to a

control centre.

These links may require special setup and configuration.

Ethernet would typically be connected to a local hub or switch, or to an external network (routers, line interface, redundant links etc) to extend beyond the location.

Refer to the system diagrams at the installation for the communication architecture.

3.8 WESTECT Encoders

WESTECT ATP is a specific extended application of WESTRACE. WESTECT encoders may be a small standalone system or a combined interlocking and encoder.

A WESTECT encoder can use any of the modules for a standard WESTRACE and must also contain a WESTECT Communication Module (WCM). The WCM connects via a Radio Control Module (RCM) to a pair of radios that broadcast movement and speed authorities to equipped trains.

WESTRACE housings for WESTECT are only different in that they contain the WCM. They use the same set up, configuration and fault finding as a standard WESTRACE.

WESTECT extensions to WESTRACE are detailed in sections 3.8.1 and 3.8.2.

3.8.1 WESTECT Communication Module (WCM)

A vital serial send only data module with a message format specific to WESTECT. The WCM passes the combined proceed authorities and entrance speed in a synchronous serial format using RS232-C levels to the Communications Rack.

3.8.2 Communications Rack

The Communications Rack is a 3RU 19 inch housing that contains the following equipment:

- Radio Control Module—RCM;
- Duplicated Radios (Tait or Motorola).

Radio Control Module (RCM)—takes the serial data message from the WCM and modulates and switches it between the two radios which transmit alternatively at approximately 1 second intervals.

Duplicated Radios—two radios increase the availability of the system.

3.9 WESTECT Remote Radio Installations

At some sites, the communications rack and antennas are located remote from the interlocking and encoder to achieve the required radio coverage. This is achieved by having a communications rack with only radios at the transmit site and a separate RCM in a 2Q wide rack mounted box, connecting using either an RS232 or RS422 serial link. No other difference exists in these installations.

3.10 WESTECT Adjacent Interlockings

At some locations, multiple interlockings have been combined with a single WESTECT Encoder area. A standard WESTECT Encoder installation is provided at the interlocking where the antennas are located. This installation receives route data from the adjacent interlocking. The signal route at proceed information is input from the interlocking and transmitted to the WESTECT Encoder.

4. System Configuration

This chapter lists the module and equipment configurations for replacement components.

4.1 Vital Telemetry

Modems may require configuration changes. See the S2 manuals.

4.2 Radio Frequency

The frequencies used by radios controlled by the WCM may need to be adjusted.

4.3 Configurable Modules

The following modules require configuration:

	See Appendix A, page:
Vital Logic Module (VLM6)	A-2
Vital Logic Module (VLM5)	A-15
Hot Standby Vital Logic Module (HVLM128)	A-33
Vital Logic Module (VLM1)	A-51
Network Communication Diagnostic Module (NCDM)	A-92
Non-vital Communications and Diagnostic Module (NVC/DM)	A-125
Non-vital Communications Module (NVC)	A-151
Diagnostic Module (DM)	A-159
Diagnostic Module 128 (DM128)	A-164

Installation specific configuration information may be identified in the installation specific schematics kept in the signal equipment room.

4.4 Installation Addresses

Each location will have a specific installation address. Refer to the installation GCSS documentation for the address kept in the signal equipment room.

5. WESTRACE OPERATING CHARACTERISTICS

This chapter describes WESTRACE system operating characteristics in detail.

5.1 Start Up Sequence

Figures 5.1 to 5.4 illustrate the events in a typical WESTRACE system start up sequence for each type of VLM.

The VLM and all the system modules perform self-tests and health checks when powered up. These tasks take approximately 16 seconds to complete.

If the initialisation tests fail:	The Diagnostic LEDs on the faulty module and fault codes captured by the Diagnostic Module will identify the faulty module.
Upon satisfactory completion:	The VLM sets its serial and parallel vital outputs according to the initialisation data (defined by the Application Engineer using GCSS or CSS). The OPC relay (OPCR) is energised and the initialisation outputs are sent to the controlled equipment.

Generally, in a railway signalling application, all outputs are set to **0** (de-energised), with the exception of red signal lamps which are required to be set to **1** (energised). The red signal lamps must be ON at initialisation because the red retention applied by de-energising the OPCR will be lost before processed outputs are enabled.

As the OPCR energises, the VSEV output of the OPC also energises, enabling the telemetry modules to communicate over serial channels.

The system 'Application Delay' (user configurable time delay) allows the system to read all inputs, stabilise all internal logic states, and calculate output states as defined in the Application Data.

When the Application Delay expires, the system commences 'Normal Working' and all output modules are permitted to operate normally.

Note: ***Module watchdog LEDs do not flash synchronously.***

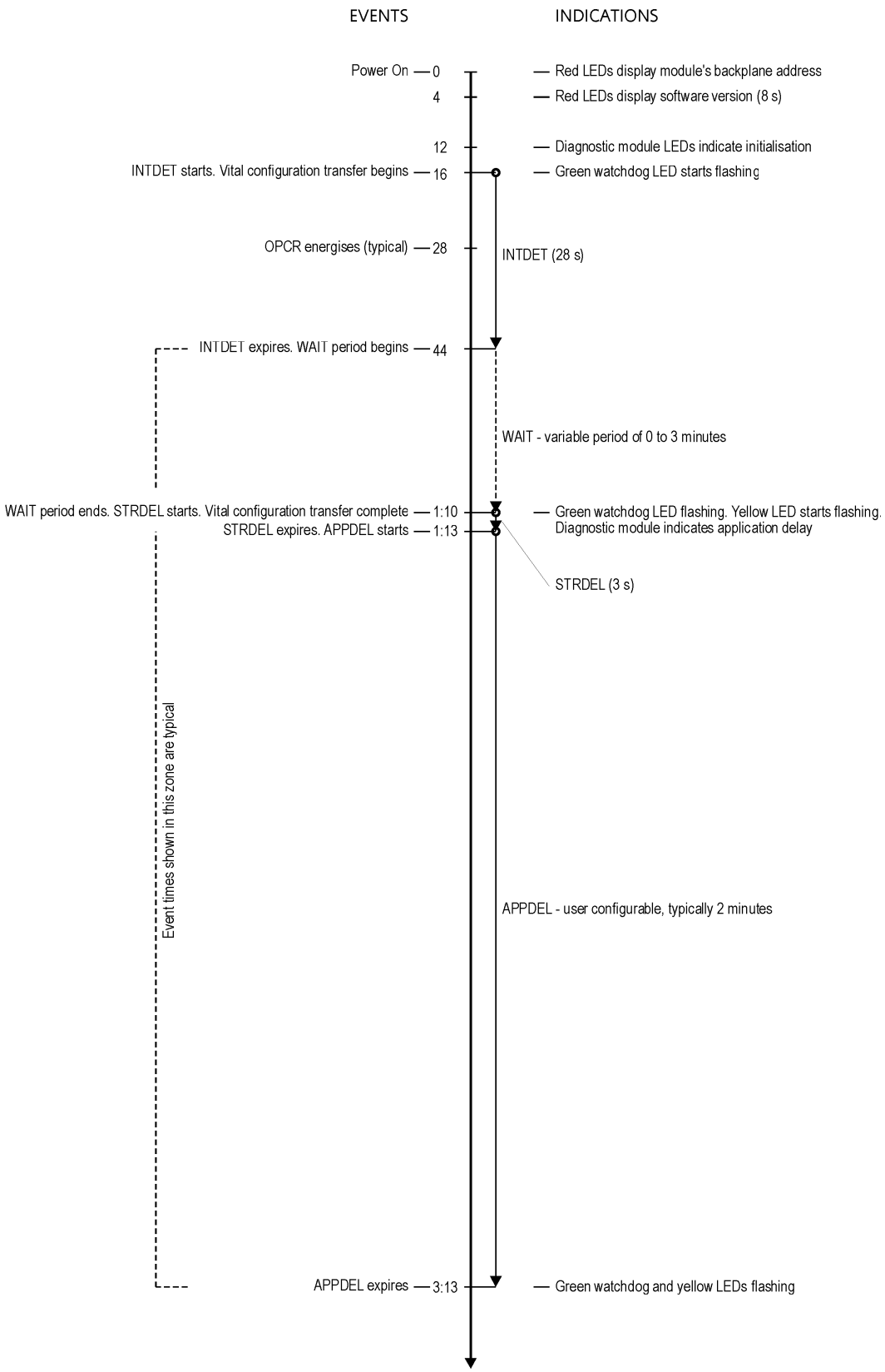

Figure 5.1: Start-up Timeline—HVLM128—Typical

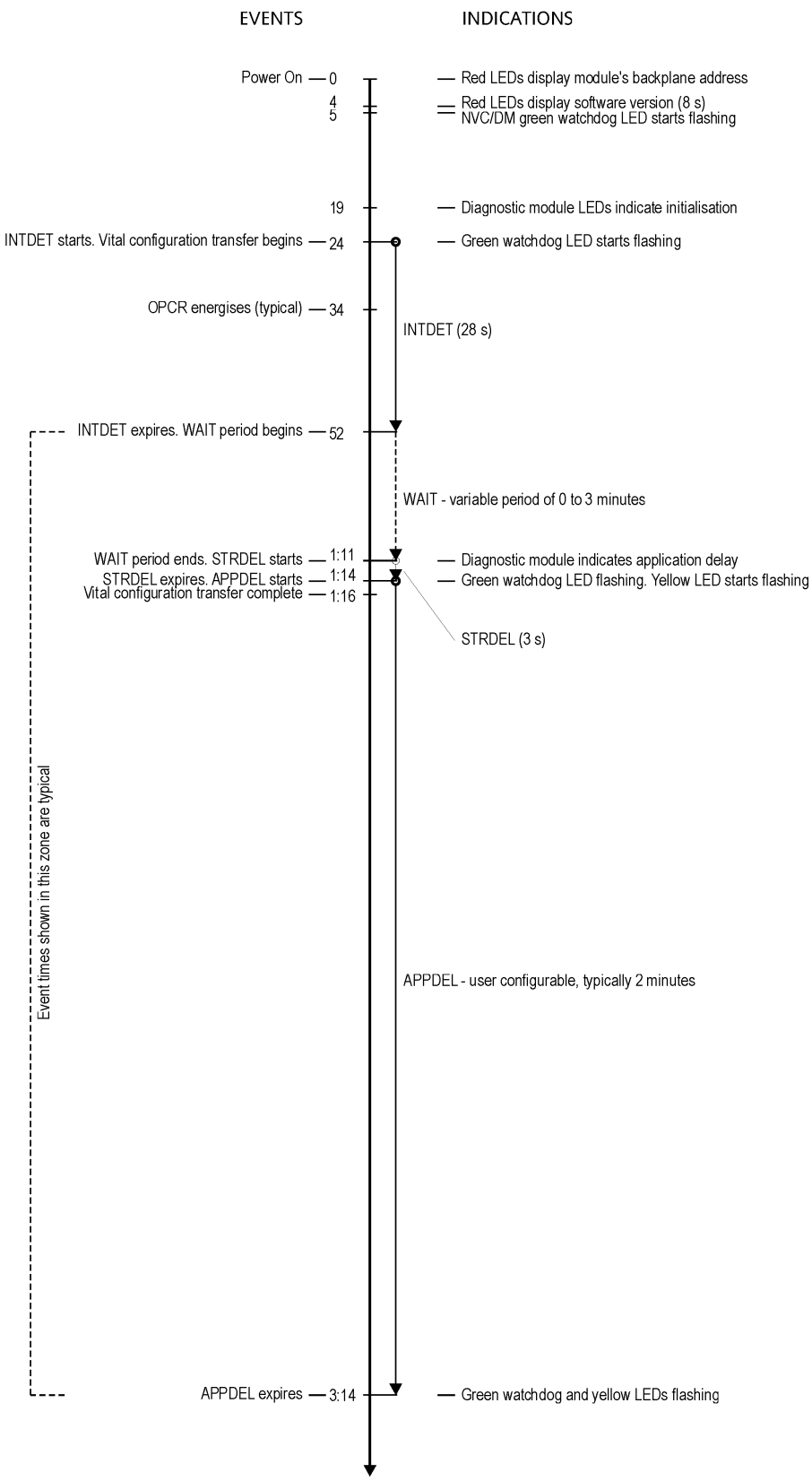

Figure 5.2: Start-up Timeline—VLM5—Typical

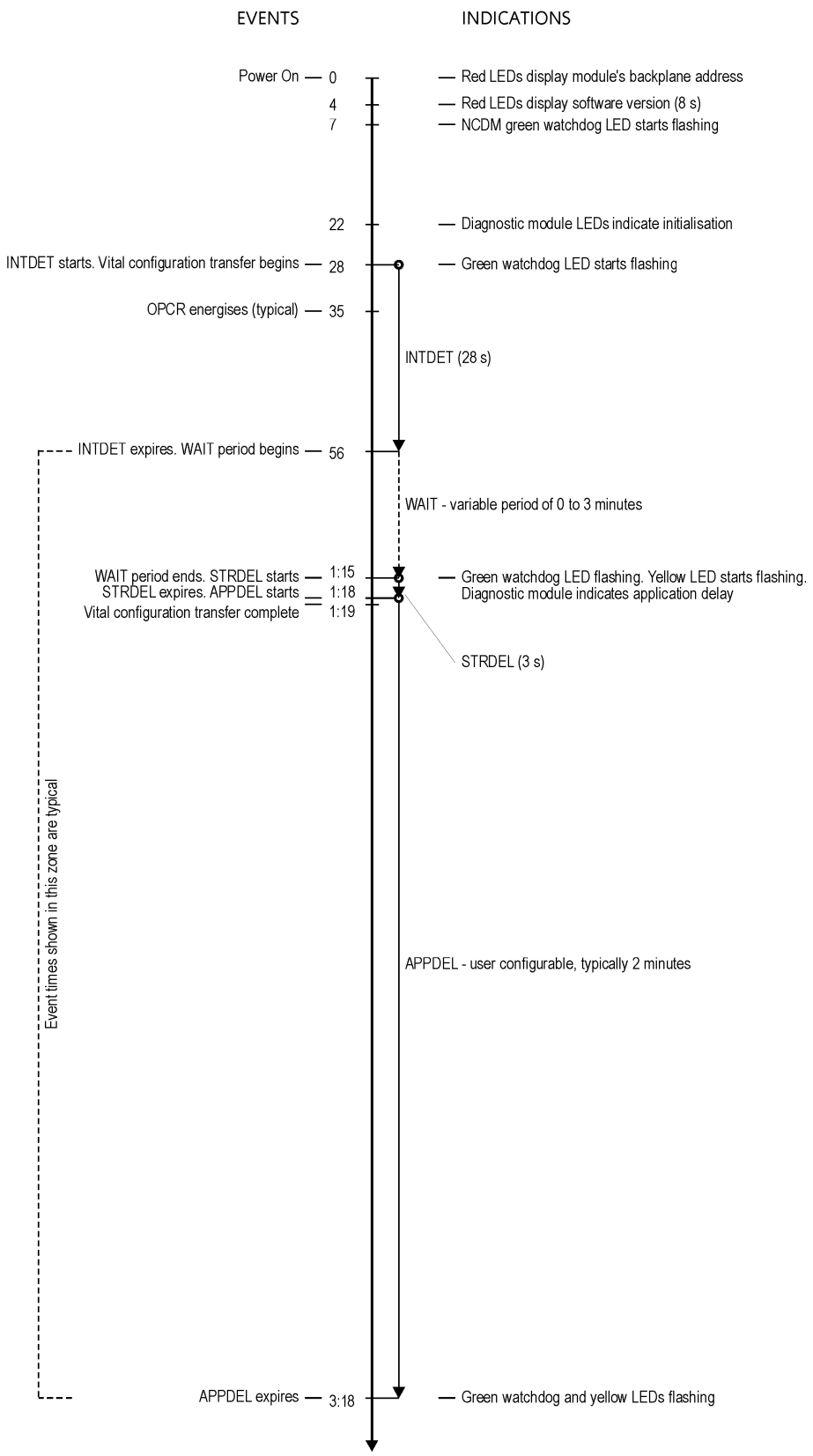

Figure 5.3: Start-up Timeline—VLM6—Standalone—Typical

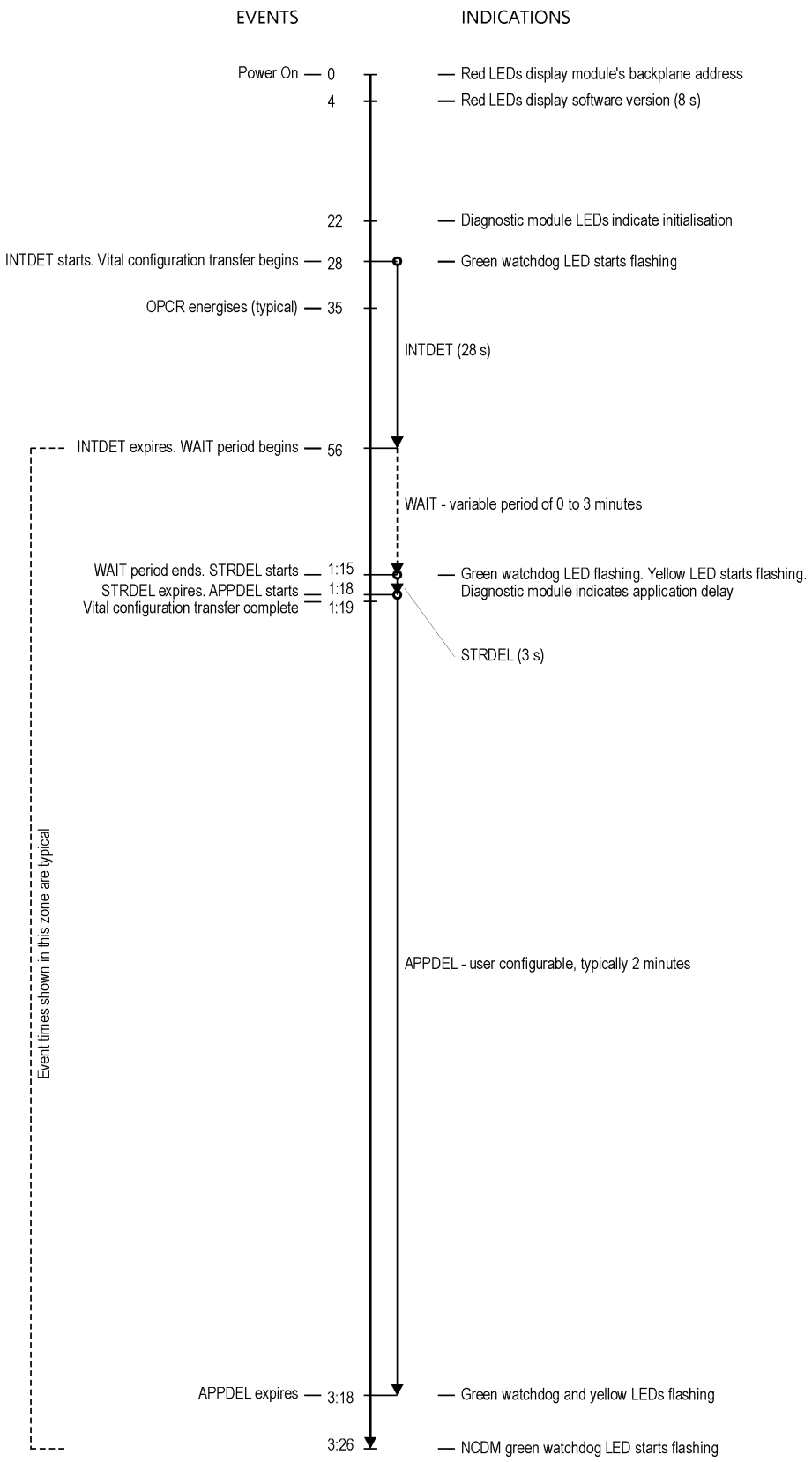

Figure 5.4: Start-up Timeline—VLM6—Hot Stand-by—Typical

5.2 Normal Working

5.2.1 LEDs

During the Application Delay and Normal Working periods, only module watchdog LEDs, the Power Supply (PSU) module LEDs and the NVC/DM or NVC Tx/Rx LEDs should be illuminated.

Note: ***Module watchdog LEDs should flash green and the HVLC LED should flash yellow.***

NVC/DM or NVC Tx and Rx LEDs flash whenever communications occur.

NCDM Ethernet Tx/Rx and serial port 2 & 3 Tx/Rx LEDs flash whenever communications occur.

PSU module LEDs should be steady red to indicate that all power rails are healthy.

Fault Indication

For modules other than the NVC/DM or NCDM, any red LED displayed on the front of the module (other than the power and communications LEDs) indicates a fault has occurred.

The NVC/DM or NCDM red watchdog LED indicates correct operation while in the Maintenance Mode.

5.2.2 Graceful Degradation

WESTRACE may continue operating after disabling or ignoring individually faulty inputs or outputs. The remainder of the system continues operating with suspect inputs assumed to be low and disabled outputs low (or off). There is no indication of this on the LEDs.

A fault will be logged when this occurs but the relevant mnemonics (see section 7.4) may not be set if the system has restarted or if there have been multiple faults.

You will need to carefully examine the logs and may need to compare actual and internal input and output states to confirm such degradation.

5.2.3 OPCR Exercise

Most WESTRACE systems will be designed to automatically test (we term it exercise) the OPCR every couple of days.

Application logic is normally written to run this test when there are no trains in the system. However the test will be run anyway when those conditions are not met within an acceptable time. These conditions will be shown in the application logic.

The OPCR test will de-energise the OPCR until the back contacts of the relay and any repeat relays have been proven made. The OPCR will then be re-energised.

The test will turn off all outputs and put red retaining signals to stop for a short time, typically a couple of hundred milliseconds.

6. MAINTENANCE

WESTRACE is Safety Critical equipment so safe operation of the Railway depends upon its correct operation. Therefore it is essential that any fault or loss of reliability be fully investigated before safety is threatened.

All maintenance of WESTRACE equipment must take account of the relevant system design documentation.

This chapter describes the maintenance requirements.

6.1 Equipment Handling

SAFETY
WARNING

WESTRACE equipment must not be controlling a railway with the equipment covers removed because external electrical noise may be introduced that could adversely affect the safe working of the WESTRACE system (typically relays, radios and mobile phones).

WESTRACE equipment must not be modified, or tampered with in any way. Return all faulty modules to Westinghouse Rail Systems Australia for repair.

Failure to observe the safety warnings in this chapter may compromise railway safety with resultant endangering of life and possible equipment damage.

6.1.1 Anti-Static Protection

WESTRACE system modules contain static sensitive devices.

You must:

- keep all spare modules in anti-static packaging before installation. Modules fitted with batteries may require special packaging;
- use appropriately grounded earthing mats to prevent damage to equipment;
- wear conductive wrist straps when handling modules;
- avoid wearing clothing made of synthetic fabric when handling modules. Cotton overalls are preferred.

6.1.2 Packing

All plug-in modules and cards shall be packaged in anti-static packaging to prevent damage to Electro Static Sensitive Devices (ESSD) from electrostatic discharge.

A module can be made static-safe by putting it in an anti-static bag or enveloping it in anti-static wrap. When so packed, the module may be stored and transported without further precaution.

The packaging must protect the equipment from all likely environments.

Modules with Batteries

Observe the instructions under Handling Lithium Batteries—Packaging on page 6-3.

6.1.3 Storage

WESTRACE modules and cards in storage:

- Must not be in close proximity to magnets, eg Advanced Warning System (AWS) magnets;
- Must be protected from damage due to electrostatic discharge;
- Must be protected from the environment including physical handling damage.

If many modules are involved, it is permissible to use conductive card frames, or racks. However connectors and pins will be exposed and must not be touched because they may not be static safe. For this reason, frames and racks should only be considered a temporary measure. Bags and wraps are preferred.

6.1.4 Transport

Take into consideration the following factors when determining the method of transport used and precautions taken:

- The protection provided by the packaging;
- WESTRACE equipment or modules must not be transported in close proximity to magnets, eg AWS magnets;
- Observe the instructions under Handling Lithium Batteries—Transport on page 6-3.

6.1.5 Lithium Batteries

The following modules have Lithium Batteries installed:

- WESTRACE Diagnostic Modules DM and DM128;
- WESTRACE Network Communications Module (NCDM);
- WESTRACE Non-vital Communications and Diagnostic Module (NVC/DM);
- WESTECT Diagnostic Logging Module (DLM);
- WESTECT Train Protection Modules (TPMA and TPMB).

Handling Lithium Batteries

Under normal operating conditions, lithium batteries are safe. However the following should always be observed.

Packaging

Package all modules with batteries in a *non-conductive anti-static bag*. An electrically conductive bag may short the battery terminals causing premature discharge of the battery.

Transport

The carriage of Lithium Batteries by air is subject to the latest edition of the International Civil Aviation Organisation (I.C.A.O.) document 'Technical Instructions For The Safe Transport of Dangerous Goods by Air' 9248-AN/905.

Damage

The electrolyte lithium batteries contain is highly corrosive. If a battery is damaged:

- ensure unnecessary personnel do not enter the affected area;
- ventilate the immediate area;
- avoid contact with any liquid or internal components by wearing the appropriate safety equipment;
- thoroughly wash the affected area with clean water and allow to dry.

Any electronic modules that may have been in contact with the electrolyte should be packaged with an appropriate safety warning and be returned to Westinghouse Rail Systems Australia for inspection.

Disposal

Dispose of the battery according to any local regulations.

Do not:

- short the terminals together;
- attempt to recharge;
- crush;
- disassemble;
- incinerate or heat above 100°C (212°F);
- attempt to solder the cell.

6.2 Power Up and Down

B24 Supply

A housing may be powered down by the removal of the B24 fuse or negative terminal pin.

For a multi-housing WESTRACE installation with separate fuses for each housing:

- **Powering down**
  Switch the *top housing off first*. The other housings can be switched off in any order.
  Wait at least 40 seconds before powering up.

- **Powering up**
  Switch the *top housing on last*. The other housings can be switched on in any order.

Caution:

Incorrectly powering up or down may:

- ***Cause the display of system fault codes;***
- ***Prevent system restart.***

6.3 Service

6.3.1 Routine Maintenance

6.3.1.1 Connections & Cable

Regularly carry out normal continuity checks on the cables and connections. Do not perform these tests while the cables are connected to electronic equipment.

6.3.1.2 Earthing

Regularly measure and improve system earthing if above 15Ω. Ideally the earth impedance should be below 5Ω.

6.3.1.3 Power Supply

Regularly check the B24 supply to ensure it is within these limits:

- 24 Vdc nominal
- 20 Vdc minimum trough;
- 30 Vdc maximum peak (including ripple and noise).

6.3.1.4 Operating Environment

Maintain the working environment of the WESTRACE equipment adequately clean such that conductive debris does not accumulate. A wrong side failure may result from a short circuit caused by an accumulation of conductive debris.

6.3.1.5 Exercise OPCR

Manually exercise (that is, de-energise and re-energise) the OPCR where this is not performed automatically as part of the application logic (strongly preferred).

At the specified intervals:

a) Obtain permission from the Signaller and adhere to the railway authority's safety requirements;

b) Remove power to housing1;

c) Verify OPCR and all aspects de-energise;

d) Restore power to housing1 after 40 seconds.

e) Verify correct operation;

f) Return control to the Signaller.

6.3.1.6 Replace Lithium Battery

Replace lithium batteries according to the following schedule:

Replacement Interval	WESTRACE Modules
5 years	NCDM, NVC/DM, DM and DM128

6.3.2 Downloading Non-vital Configuration to NVLM

ICS version 6.2 (and higher) can be used download the Non-vital Configuration from an image file created by GCSS (6.2 and higher) directly to an NVC/DM or NCDM. See reference [ICS] for details.

6.3.3 Replacement of Faulty Modules

SAFETY WARNING

This is a safety system. Replacement modules must be the same or a later issue than the module being removed.

Observe the anti-static precautions outlined in section 6.1.1 when handling WESTRACE modules.

Read sections 7 and 7.1 before commencing this procedure.

a) Use the Faulty Equipment Return Form (Appendix I) to record the fault codes on display when you first examine the WESTRACE installation;

   Decode each fault code and determine which module is indicating an unhealthy state;

b) Obtain permission from the Signaller and adhere to the railway authority's safety requirements;

c) Remove system power (B24). Observe the requirements of section 6.2;

d) Reinstate system power (B24). Observe the requirements of section 6.2;

Note: ***This simple expedient can fix some apparent faults.***

If fault codes reappear after step **d**:

e) Look for the first module to show fault codes before all the other modules. This module is likely to be the cause of the problem;

f) Compare the fault codes with those recorded in step **a**. Expect to see the same codes recorded in step **a**. Record any changes on another form;

g) Remove system power (B24);

h) Remove signalling supply(s);

i) Remove the conductive covers from the front of the affected housing(s);

j) Remove the module by levering it from the housing using the built-in ejection levers or use the WESTRACE module ejection tool. See page page A-131;

k) Identify the replacement module and verify it complies with module issue requirements for the installation;

   Refer to the circuit book in the Signal Equipment Room;

l) Adjust the configuration of the replacement as required for the installation;

   Refer to the circuit book in the Signal Equipment Room and the appropriate section of Appendix A;

m) Insert the replacement module;

   Avoid forcing a module when inserting it into a housing. Ensure that the PFM mates correctly with the module's lower connector;

   Check for shorts between adjacent pins on the output connector after replacing a VROM module. This must be done before the system can be considered safe;

   Perform this check by testing for short circuits between all pins on the PFM with a multimeter. Do not use a high voltage tester (eg Megger) for this short circuit test;

n) Replace the system housing covers and apply power to the system. Observe the requirements of section 6.2.

Only hand the WESTRACE system back to the controlling authority after it has successfully energised the OPCR and normal operation has commenced.

6.3.4 Replacement of PFMs

SAFETY
WARNING

This is a safety system. Replacement modules must be the same or later issue than the module being removed.

a) Obtain permission from the Signaller and adhere to the railway authority's safety requirements;

b) Remove system power (B24). Observe the requirements of section 6.2;

c) Remove signalling supply;

d) Disconnect PFM external connection plugs;

e) Remove PFM by unscrewing the 2 mounting screws fixing the PFM to the rear of the housing;

f) Insert a replacement PFM and fix all mounting screws. Ensure that the PFM mates correctly with the module's lower connector;

g) Reconnect the PFM external connection plugs ensuring that the correct plug is inserted in the associated socket;

h) Check PFM external connecting plug labels and ensure that the external connections are correct;

i) Remove the conductive housing covers from the front of the affected housing(s);

j) Check that the module associated with the replaced PFM is seated correctly;

k) Replace the system housing covers and apply power to the system. Observe the requirements of section 6.2.

Only hand the WESTRACE system back to the controlling authority after it has successfully energised the OPCR and normal operation has commenced.

6.3.5 Module Repair

Module repair must only be carried out in a fully equipped repair facility.

a) Place a suspected faulty module in anti-static packaging after removal from a system;

b) Properly complete the Faulty Equipment Return Form (see Appendix I);

c) Returned the faulty module and completed Faulty Equipment Return Form to Westinghouse Rail Systems Australia for testing and repair.

6.3.6 Reporting of WESTRACE Faults

Report any WESTRACE Equipment fault in writing to the Manager, Signalling Systems, Westinghouse Rail Systems Australia, 179–185 Normanby Road, South Melbourne, Victoria 3205, Australia.

6.3.7 Return to Service after Maintenance

Return WESTRACE equipment to service in an orderly and safe manner adhering to local rules.

6.4 Disposal

Carefully consider the role and functions performed by the WESTRACE System when replacing it with other equipment. For example; the system may be operating in safety mode, perhaps as an interlocking. Thus take extreme care during the change over to ensure that an unsafe set of

circumstances cannot arise. This requirement might involve the WESTRACE System operating in parallel with its successor.

The relationship between reliability and safety is most important because WESTRACE equipment may be used in a fail-safe role. Typically, safety is considered to be proportional to reliability squared (ie safety $\propto$ reliability^2). This means safety will decline rapidly as reliability decreases through ageing of components.

The life expectancy of WESTRACE equipment is approximately 20 years and it may ultimately become unreliable. It must be replaced when life-expired and not be kept in service with degraded reliability.

7. Fault Conditions and Errors

WESTRACE generates and logs a fault for every test and check that fails. Most fault error codes are displayed on the LEDs or alphanumeric display on the modules, but only one fault can be displayed by each module. You can read all logged faults from the diagnostic module using one of the utility PC programs.

WESTRACE's diverse safety architecture uses multiple and different methods to verify modules are healthy and shuts the system down when vital modules cannot be guaranteed to be operating safely. A vital module can be shut down by:

- its own self tests;
- the tests executed on it by either of its vital neighbours, or;
- the test executed by the VLM.

Once one vital module is shut down, its neighbours will notice that it is not working and will also shut down, generating their own fault code.

Thus if one module fails for any reason, all vital modules will display a fault code. There are three fault codes generated in this sympathetic shut down that indicate a fault on another module:

01H:	Second Negation Error
2DH:	Health Monitoring Time Error
2EH:	Health Monitoring Health Error

7.1 Reading Fault Codes

Faults within WESTRACE generate fault codes. These fault codes are indicated by:

- Fault diagnostic LEDs on the front of a module;
- Alphanumeric display on the NVC/DM or NCDM;
- The MoviolaW Fault Window.
  MoviolaW provides some additional fault codes for some modules, for example, recovery from NVC/DM or NCDM faults.

A fault code indicated by the Fault Diagnostic LEDs or alphanumeric display on the front of a module is applicable to that particular module. The alphanumeric display shows the error code whereas the pattern of lit Fault Diagnostic LEDs has to interpreted to determine the error code.

All Fault Diagnostic LEDs are read in the same manner.

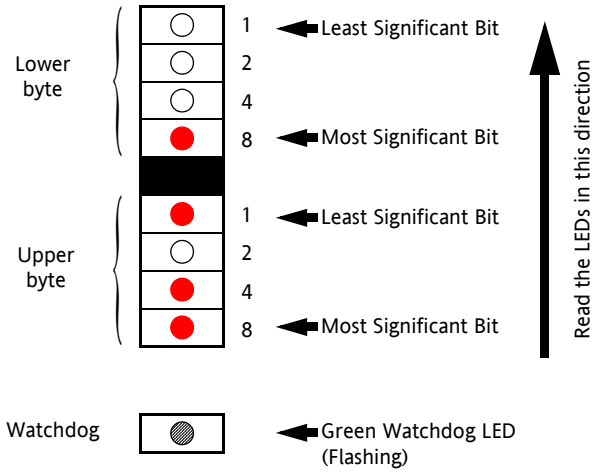

Figure 7.1: Fault Diagnostic LEDs

Each module has two groups of four LEDs to indicate a fault code comprising two bytes. The upper byte is the first (left) character of a Hexadecimal fault code and the lower byte is the second character. An LED represents **1** when illuminated and **0** when not illuminated.

The example in figure 7.1 is displaying 1101 1000 (reading bottom to top) which represents D8H (where H means hexadecimal).

Figure 7.2 shows the 16 patterns a group of four vertical LEDs can indicate. Each pattern represents a particular character and these are shown also.

Use the information in figure 7.2 to read the fault code displayed by Fault Diagnostic LEDs on the front of a module. Remember, the lower four LEDs represent the first (left) character and the upper four the second character in the Hexadecimal error code.

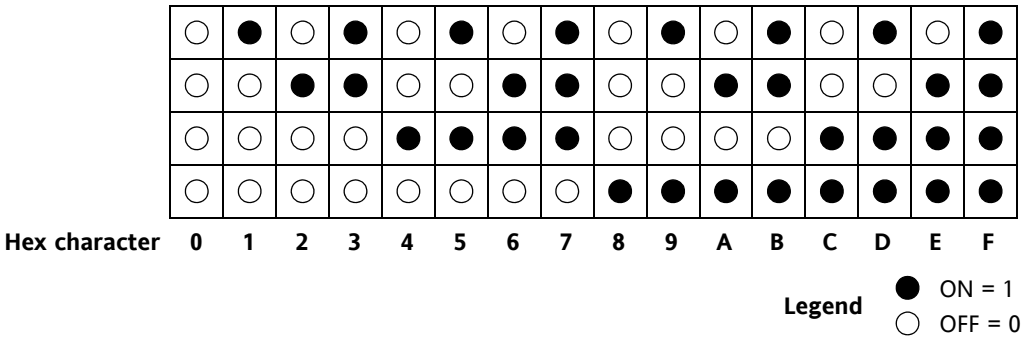

Figure 7.2: Fault Diagnostic LEDs—Reading

Fault codes and their applicable meaning for individual WESTRACE modules are in Appendix A. Usually, the faulty module displays its error code before the rest of the modules display their codes. The timing is very quick and may be difficult to observe in a large WESTRACE system.

7.2 Fault Finding

WESTRACE is part of an overall signalling system. Do not assume that the fault is in WESTRACE and not in some other part of the system.

Try and validate all reports of reports of faults that you may receive. People can be unreliable in observing and reporting what actually happened. Use actual measurements and recorded history as one avenue for validating fault reports.

Use the flow chart on page 7-4 as a quick reference for identifying system faults. In most cases the chart will help you arrive at satisfactory solution to a first-line maintenance problem.

Continually be alert for situations where the initiating fault is masked by subsequent and unrelated faults and error codes. The Diagnostic Module polls the other WESTRACE modules in turn to read initialisation information such as fault codes and it only stores changes to the information. The Diagnostic Module stores the changes it sees first, and since it polls each of the modules in turn, the stored change may not be the first that occurred.

Systems with intermittent faults can be difficult to diagnose. Record every action you take and every change you make as you seek the source of the fault.

Faulty modules should be returned to Westinghouse Rail Systems Australia for testing and repair.

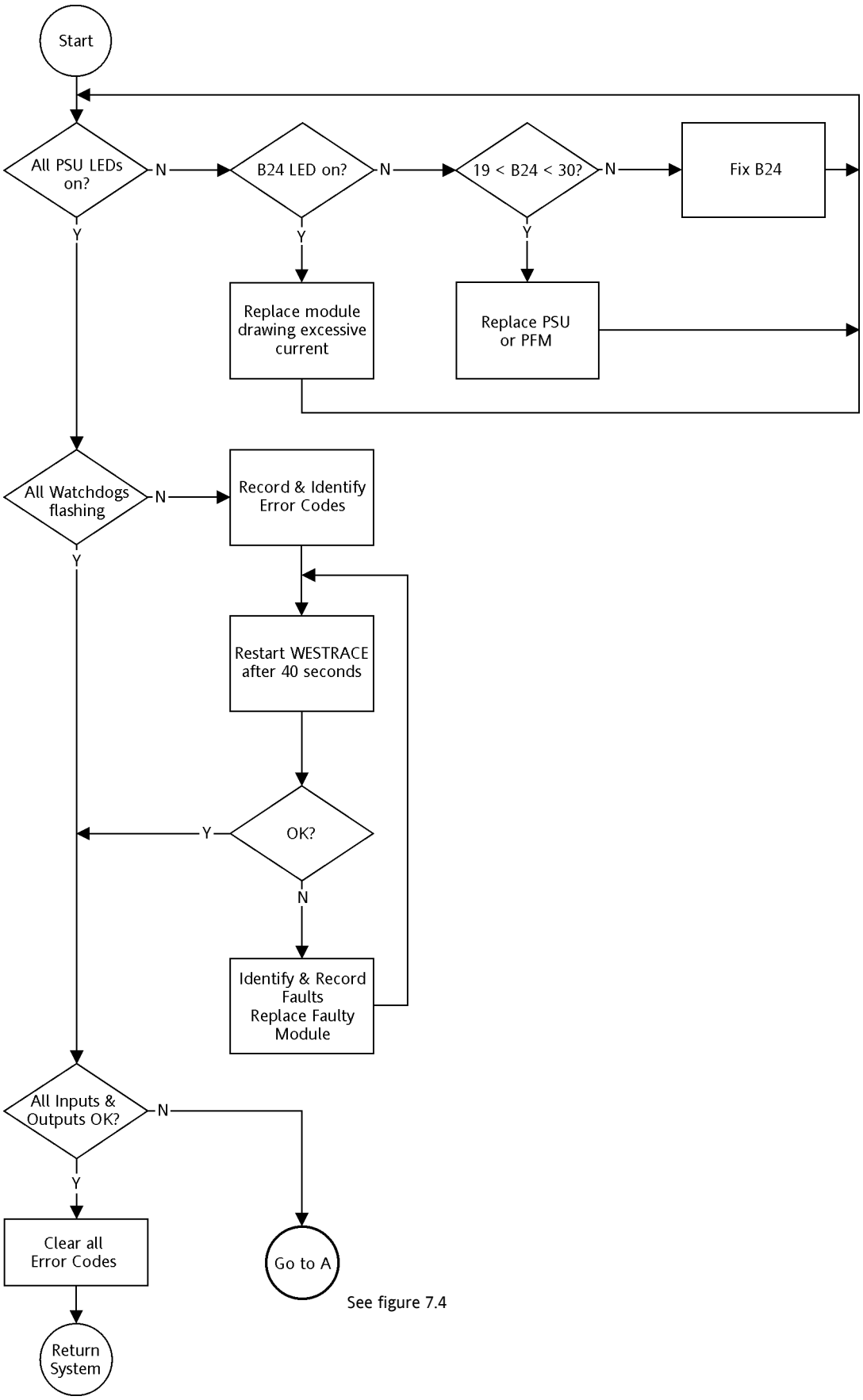

Figure 7.3: Fault Finding Flow Chart (Part 1)

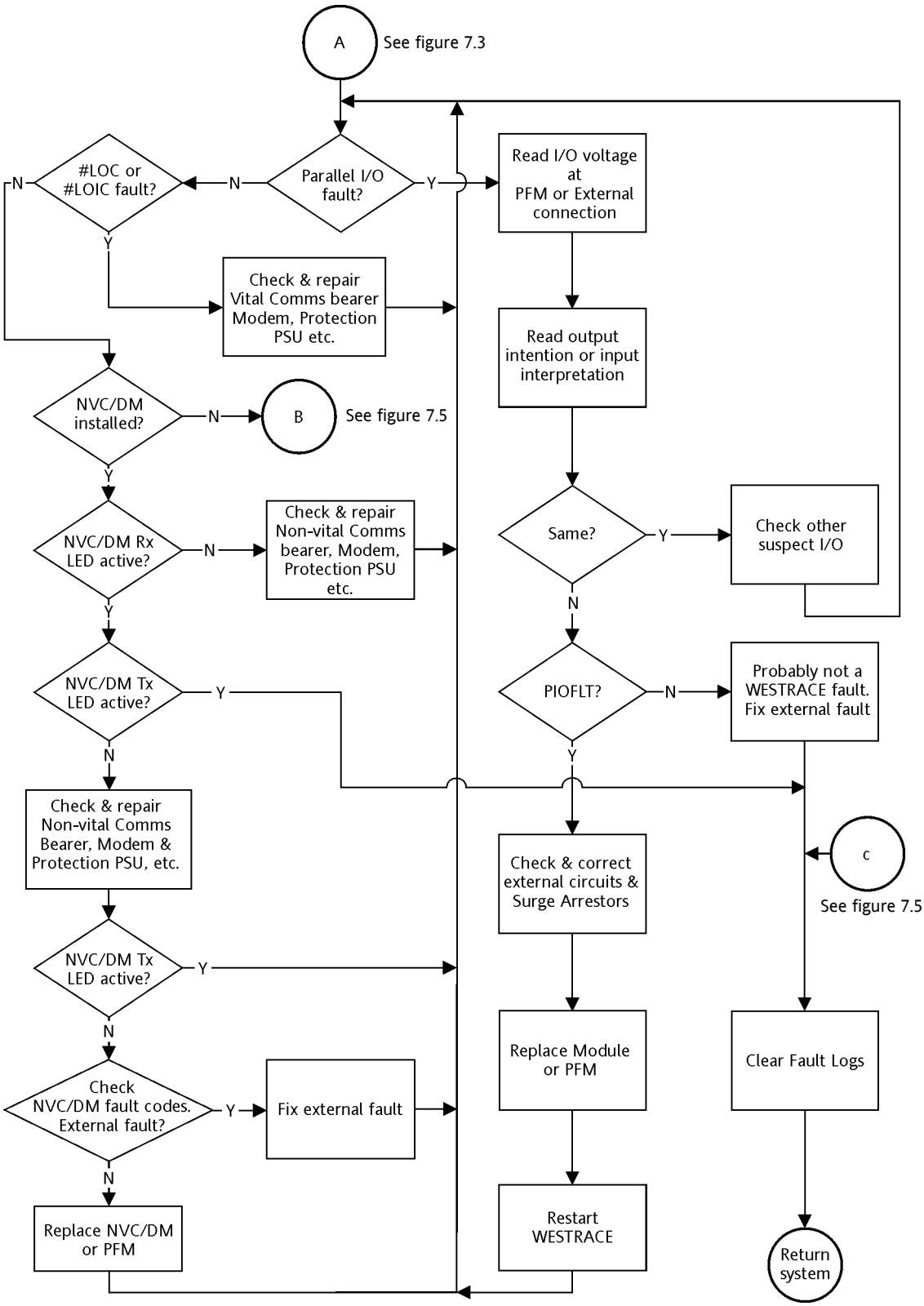

Figure 7.4: Fault Finding Flow Chart (Part 2)

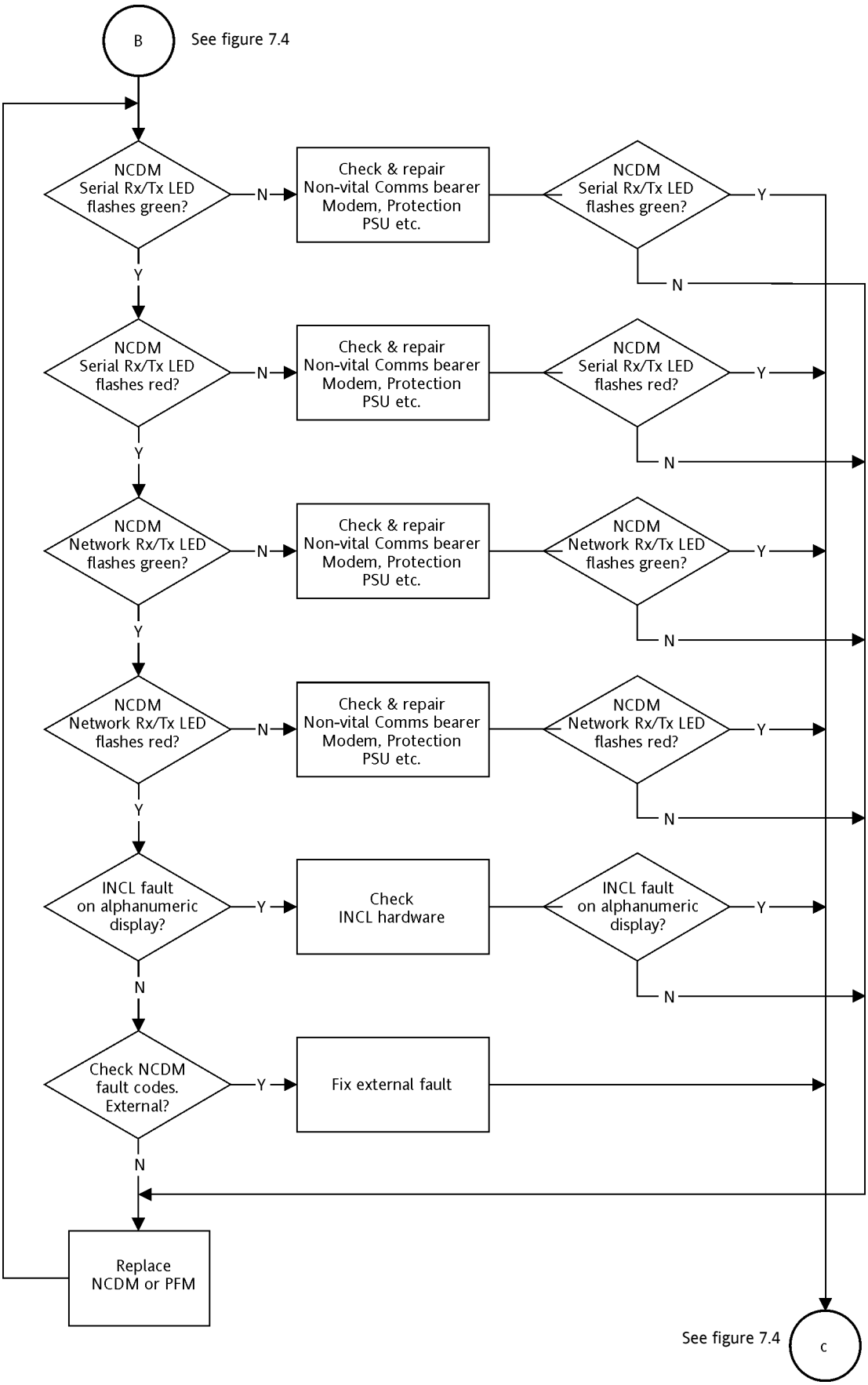

Figure 7.5: Fault Finding Flow Chart (Part 3)

7.3 Faults During Start-Up

Some faults may prevent completion of the start up sequence described in section 5.1. Diagnose the problem logically, using this section as a guide. In each case, confirm that step **a** did or didn't fix the problem before moving to step **b** etc.

PSU does not display all red LEDs

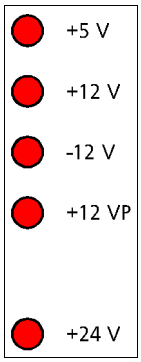

No LEDs are illuminated:

a) Verify that B24 power is available at the external PSU PFM connector.

b) Replace the PSU if 24 V power is available.

24 V power is present but power rail LEDs are not illuminated:

a) Remove all modules from system housing and determine whether the fault lies in:
   - the PSU, or
   - a system module.

b) Replace the offending module.

All Modules display all LEDs

All the modules are displaying the Fault Code FFH:

a) Ensure the PSU is fitted correctly.

b) Replace the PSU if the fault persists.

Module Faults

One module fails to flash its watchdog as other modules start up, and subsequently an error code is displayed by the Fault Diagnostic LEDs.

a) Switch system power off (B24) and wait 40 seconds before re-applying the power.

b) Replace the offending module with a known working spare and repeat step **a**.

Usually, the module that first displays an error code is the faulty one.

OPCR Faults

The VLC displays the error code DCH indicating insufficient 'power off' time (for the OPC card) may have elapsed prior to switching the system on.

a) Switch the B24 supply to the PSU and the OPC off, wait at least 40 seconds and power on again;

Take the following steps if the error persists:

b) Check the OPCR is correctly wired from the OPC card and that the relay is functional. Replace if necessary and repeat step **a**;

c) Verify the OPC and VLC cards are correctly inserted. Correct if necessary and repeat step **a**;

d) Replace the OPC card with a known working OPC card and repeat step **a**;

e) Replace the VLC card with a known working VLC card and repeat step **a**.

VLM Faults

Identify error codes on all modules including VLC.

After replacing Application Logic PROMs (CED PROMs with the correct version CED installed):

a) Ensure that version switches are correct and PROMs are located in correct sockets. Refer to the GCSS installation specific printouts;

For older VLM1 cards, these switches and PROMs are located on the CEC card;

For newer VLMs, these switches and PROMs are located on the VLC card (there is no CEC card);

Installing incorrect, invalid, or otherwise corrupted PROM data will prevent the system from operating.

Try the following if the error persists:

a) Switch system power off (B24) and after waiting 40 seconds, attempt a restart;

b) Verify the OPC and VLC cards are correctly inserted. Correct if necessary and repeat step **a**;

c) Replace the OPC card with a known working OPC card and repeat step **a**;

d) Replace the VLC card with a known working VLC card and repeat step **a**.

NVLM Faults

See Appendix A, section A.11.6.6 for NCDM faults and section A.12.6.6 for NVC/DM.

Note: ***Neither NVC/DM or NCDM will start if the CED version is not correct.***

Start-up sequence not complete

The top housing (containing the VLM) must be powered up at the same time, or later than all other housings.

Fit the fuse or link to the top housing last when each housing has a separate fuse or link.

7.4 Faults During Normal Working

Faults may arise during normal working of a system. They may be minor system faults, or faults leading to system negation.

Determine the status of suspected faults or other conditions by interrogating the diagnostic module. Do this using MoviolaW or the Diagnostic Module Logging Package.

See:

- Appendix B — Diagnostic Module Technician Interface;
- Appendix C — Diagnostic Module Logging Package;
- Appendix D — MoviolaW;
- Appendix E — GETLOG Utility;
- Appendix F — NGETLOG Utility.

Clear the fault log after fixing a fault.

The following paragraphs provide some guidance. In each case, make sure that the current step has not corrected the problem before proceeding to the next.

Module shuts down

One module shuts down (fails to flash its watchdog) and displays an error code on the Fault Diagnostic LEDs. Other modules also stop functioning and display an error code. OPCR is de-energised.

Follow the procedure described in section 6.3.3.

OPCR de-energises and no error codes are displayed on modules

Power down and replace the VLC or HVLC and OPC cards (one at a time). Restart and check operation.

A re-occurrence of the fault is likely to be a backplane problem and replacement may be necessary.

Vital Relay or Vital Lamp output(s) are not energised

Vital Relay or Vital Lamp output(s) should be energised but are not. Modules show no error codes and continue to operate normally. This may be apparent by a relay not energising or a signal aspect not illuminating when required.

Check the following:

a) Read the actual state of the WESTRACE output by connecting a voltmeter to the appropriate PFM terminals. The fault is external to WESTRACE if this voltage is correct;

b) Verify the intended state of the WESTRACE output by reading the associated mnemonic from the Diagnostic terminal, MoviolaW, GETLOG or NGETLOG;

   ('1' is on. '0' is off)

   Any difference between the intended and actual states suggests the fault is in the module or the PFM. However, a module fault could have been caused by an external fault;

c) Check the diagnostic module for a PIOFLT;

   A PIOFLT is generated when a module blows an internal fuse to protect against a suspected faulty output;

   Replace this module, restart and check WESTRACE. PIOFLT (and FAULT) will reset when the system is restarted;

d) Check the output fuse. It might have blown;

e) Check the signalling supply to the module;

   The VLOM B50 must be smoothed and within specified limits. Correct as necessary;

f) Disconnect the cable from the PFM;

   Use a multimeter to check on the PFM plug for unintended voltages, ground faults or short circuits on the external circuit. Correct as appropriate;

g) Replace the module, restart and check WESTRACE;

h) Replace the PFM, restart and check WESTRACE;

i) Label faulty module and return to Westinghouse Rail Systems Australia as described in section 6.3.5;

j) Clear the fault log.

Vital Parallel Input Module energised but not recognising input

Vital Parallel Input Module input is energised, but system does not recognise energised state. Module shows no error codes and continues to operate normally.

Disabled VPIM inputs are typically caused by transient over-voltages on the external circuits.

Execute as necessary to rectify the fault:

a) Read the actual state of the WESTRACE input by connecting a voltmeter to the appropriate PFM terminals;

b) Verify the interpreted state of the WESTRACE input by reading the associated mnemonic from the Diagnostic terminal;

(‘1’ is on. ‘0’ is off)

Any difference between the interpreted and actual states suggests the fault is in the module or the PFM. However, a module fault could have been caused by an external fault. Correct as necessary;

c) Disconnect the cable from the PFM;

Use a multimeter to check on the PFM plug for unintended voltages and ground faults Correct as appropriate;

d) Check the surge arrester for damage for electrical failure. Replace as necessary;

e) Replace the module, restart and check WESTRACE;

f) Replace the PFM, restart and check WESTRACE;

g) Label faulty module and return to Westinghouse Rail Systems Australia as described in section 6.3.5;

h) Clear the fault log.

Loss of Input or Output Channel on a EVTC Module

Execute as necessary to rectify the fault:

a) Inspect the status of the vital signal channels at both the sending and receiving WESTRACE by reading the state of the #LOOC and #LOIC mnemonics (# = channel number (0-7));
   - #LOIC = 0 indicates valid data is not being received;
   - #LOOC = 0 indicates valid data is not being sent;

b) Deduce whether the fault is in the communication channel. Inspect communication channels, including cables, modems, power supply line protection, and correct communication faults;

c) Replace the module, restart and check WESTRACE;

d) Replace the PFM, restart and check WESTRACE;

e) Label faulty module and return to Westinghouse Rail Systems Australia as described in section 6.3.5;

f) Clear the fault log.

Non-vital communication faults

Execute as necessary to rectify the fault:

There may be several non-vital communication channels. These may not all be active at the one time. Study the system diagrams and ascertain that you do have a problem with an active communication channel.

a) Observe the flash rate of the communication indicating LEDs;

NVC/DM

- *Rx LED is not flashing*. This indicates that no data is being received by this channel. Check the telemetry line, modem, power supplies, line protection etc;
- *Tx LED is not flashing*. This indicates that the module is not

receiving valid data for its assigned S2 address. Check the telemetry line, modem, power supplies, line protection etc;

NCDM

- *Double LED (D5) is not flashing*. This Green/Red LED (see figure A.31) indicates the status of the Ethernet connection. Green not flashing indicates the transceiver is not receiving data. Red not flashing indicates the transceiver is not transmitting data. Check the Ethernet connection, the NCD PFM etc;
- *Double LEDs (D6 & D7) not flashing*. These Green/Red LEDs (see figure A.31) indicate the status of serial ports 2 and 3 respectively. Green not flashing indicates the serial port is not receiving data. Red not flashing indicates the serial port is not transmitting data. Check the serial connections, the NCD PFM etc;

b) Inspect for any module fault codes (NVC/DM or NCDM fault codes may be read from the front alphanumeric display; DM fault codes must be read from the diagnostic interface;

c) Replace the module, restart and check WESTRACE;

d) Replace the PFM, restart and check WESTRACE;

e) Label faulty module and return to Westinghouse Rail Systems Australia as described in section 6.3.5;

f) Clear the fault log.

Network Communication Faults

Network faults may be to do with the network port (see Appendix A, section A.11.6.7.1) or the with one of the communications sessions (see section A.11.6.7.2).

8. WESTECT Communication Equipment—Fault Finding

8.1 Introduction

The communication system is described in Appendix H.

The communication components may be installed in a single housing or the radios and antennae may be separated from the encoder and remote RCM. Maintenance technicians should determine which arrangement is used prior to attempting fault finding.

The first-line maintenance level of this system it limited to:

- WCM Module—refer to Chapter 7 of this manual;
- Radios—detection of faults and replacement of complete radios;
- RCM—(either individual module where it is installed in a communication housing or the complete unit where the remote RCM is used) detection of faults and replacement of the complete module. The circuit boards should not be separated;
- Wiring—detection and correction of faults;
- Antenna and Cabling—detection and correction of faults.

8.2 Equipment

The following equipment may be necessary:

- WESTECT Portable Radio Monitor;
- WESTECT ATP Portable Radio Monitor User Manual;
- 420 MHz reflected power meter;
- Digital multimeter;
- Hand tools.

8.3 System

8.3.1 Fault Finding

Figure 8.1 shows the general fault finding process.

The initial testing of the system is performed with the Portable Radio Monitor (PRM). Refer to the WESTECT ATP Portable Radio Monitor User manual for details on use of this equipment.

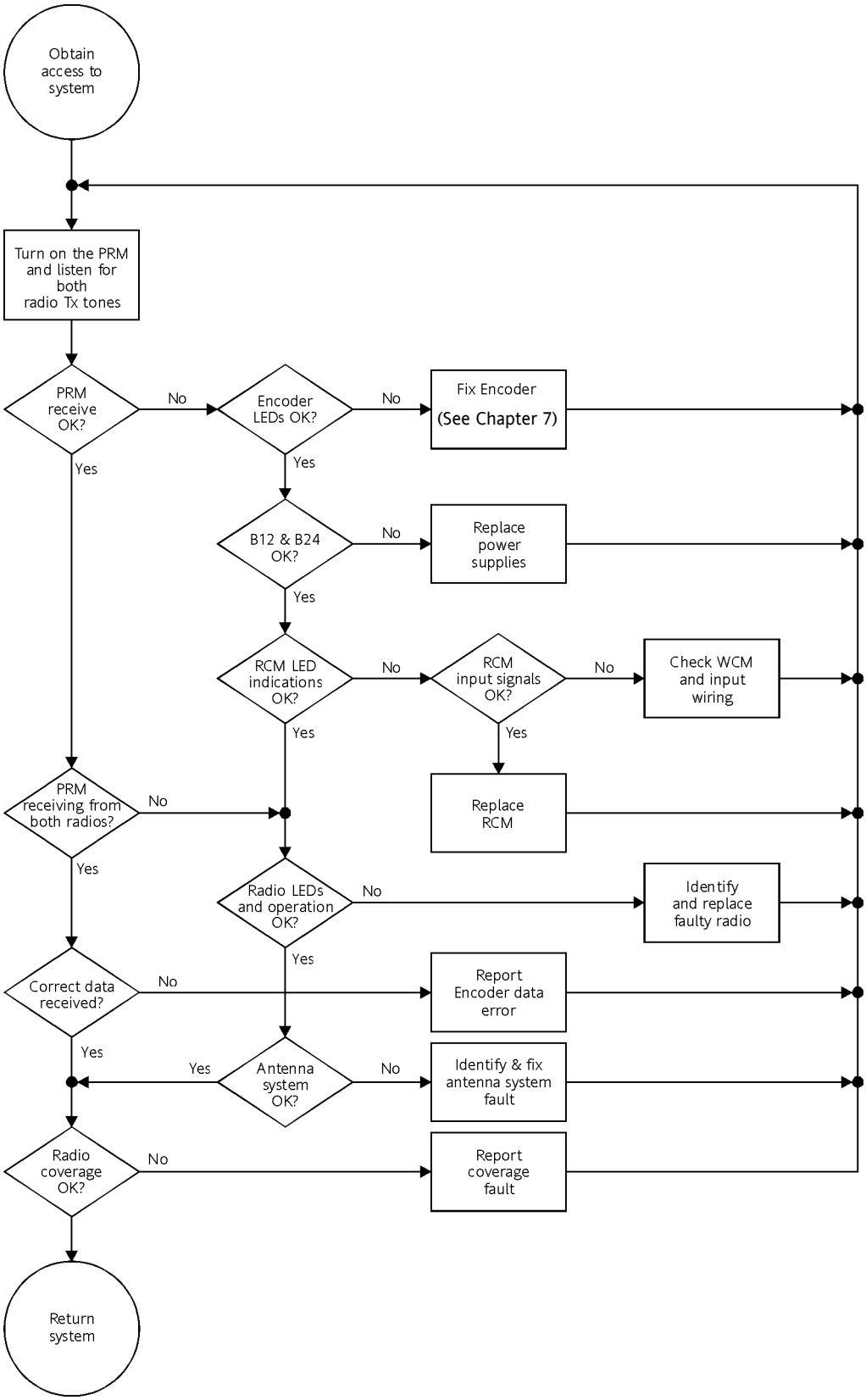

Figure 8.1: General Fault Finding Process

8.3.2 Power Supply

There are two power supplies used by the system.

B24 supply—used to supply the WESTECT encoder powers the RCM.

Check this supply to ensure that it is within the specified tolerance. See section 6.3.1.3.

B12 supply—used to power the radios.

Measure the voltage on this supply while each radio is transmitting to ensure it is within tolerance. Refer to the radio manuals for the allowed tolerance on this voltage.

8.3.3 Connections & Cable

See section 6.3.1.1 for continuity checks.

A portable oscilloscope can be used to verify signals on the interfaces between the WCM and RCM and the RCM and the radio.

8.3.4 Earthing

See section 6.3.1.2.

8.4 Communication Housing Removal & Replacement

Obtain possession before removing or replacing equipment.

Step	Procedure
1.	Ensure that the B12 and B24 power is off. Unscrew the four screws that secure the communications housing to the rack. Identify then disconnect the cables from the terminal block TSCOMMS. Disconnect the side earth strap from the communications housing. Disconnect the radio antenna plugs from the back of the communications housing. Lift the communications housing clear of the rack.
2.	Fit the replacement communications housing into the WESTECT cubicle. Reconnect the cables to TSCOMMS connecting the communications housing. Secure to the rack using the screws removed during step **1**. Reconnect antennas.
3.	Carry out the system serviceability test.

Table 8.1: Removal and Replacement—Communication Housing

8.5 Radio & Control Module

8.5.1 Checking

Checking of the RCM is initially performed using the status LEDs. Refer to Appendix H for details of LED operation.

Further testing can be carried out with a portable oscilloscope or multimeter. This is limited to verification that the correct signals are present on the input and output.

8.5.2 Removal & Replacement

Obtain permission from the Signaller and adhere to the railway authority's safety requirements.

Remove the Communication Housing as described in section 8.4.

Step	Procedure
1.	Remove the cover plate from the communications rack chassis, disconnect all external cables attached to the RCM. Unbolt the RCM from the chassis.
2.	Install a replacement RCM. Secure the RCM to the chassis with the bolts removed in Step 1, and reconnect the cables. Refit the lid. Refit the cover plate and secure the cover plate in place.
3.	Re-install the communications rack into the rack and connect cables.
4.	Carry out the system serviceability test.

Table 8.2: Removal and Replacement—Radio and Control Module

8.6 Radios

8.6.1 Checking

Checking of the Radio is performed by:

- checking of the input to the Radio from the RCM;
- checking of the transmit functions via the LEDs (Tait Radios only);
- checking for warmth of the radio indicating that the transmit function is operating;
- removal of the data connector from the radio to prevent transmit.

8.6.2 UHF Radios—Removal Replacement

Refer to the WESTECT Train Carried Equipment First-line Maintenance Manual when performing these procedures.

Step	Procedure
1.	a Remove the Communications Rack from the Cubicle; b. Remove the top cover from the front of the Communications Rack housing.
2.	a Remove the cover plate from the Communications Rack Chassis; b. Carefully disconnect the cables attaching Radio2 and the Reader Logic Board (RLB) to the Communications Rack Chassis.

Table 8.3: Removal and replacement—UHF Radios

When Radio 1 is faulty:

Step	Procedure
3.	Disconnect all external cables to the radio.
4.	**Clyde and 2800 Class locomotives (Motorola radios)** a Open cover to the radio using an Allen Key; b. Unbolt Radio 1 from the chassis and remove radio. **Tilt Trains, 2600 and 2800 Class Locos No: 2840–2849 (Tait radios)** a Slide radio removal keys on both sides of the front panel to disconnect the radio from the housing; b. Move radio forward and out of the housing.
5.	**Clyde and 2800 Class locomotives (Motorola radios)** a Bolt the replacement Radio 1 to the chassis; b. Close cover to the radio; **Tilt Trains, 2600 and 2800 Class Locos No: 2840–2849 (Tait radios)** Slide replacement radio into the housing.
6.	a Reconnect all external cables to the radio; b. Fit the lid to the chassis; c. Reconnect cables to the lid.
7.	Carry out the System Serviceability Test.

Table 8.4: Removal and replacement—UHF Radios—Radio 1 Faulty

When Radio 2 is faulty:

Step	Procedure
8.	**Clyde, 2300 and 2800 Class locomotives (Motorola radios)** After removing the lid: a Disconnect the external cables attaching the lid to the chassis: b. Turn the lid over to expose Radio 2 and the RLB; c. Use an Allen Key to open the cover to the radio and unbolt the radio from the lid; d. Install the replacement radio: e. Open the case and bolt the radio to the lid: f. Reconnect the external cables to the radio and RLB and refit the lid to the chassis; g. Reconnect the external cables to the radio. **Tilt Trains, 2600 and 2800 Class Locos No: 2840–2849 (Tait radios)** a Install the replacement radio; b. Reconnect all external cables to the radio and fit the lid to the chassis; c. Re-attach the cables to the lid.
9.	Carry out the system serviceability test.

Table 8.5: Removal and replacement—UHF Radios—Radio 2 Faulty

8.7 Antenna System

The antenna system requires specialist equipment for complete testing and checking. This will generally require the services of a communication technician and so full details are not included here.

Faults with the antenna or cable can lead to reduced coverage or total loss of radio reception. This will often be indicated by a failure of only one radio in the train log.

Check the antenna system:

- Visually inspect the cable, antenna mount and earthing;
  Damaged cable or poor earthing should be corrected or replaced;
- Check also for any equipment that may have been installed on the antenna mast after the initial installation and that may interfere with the radio propagation;
- Measure the cable continuity to detect antenna connection and short circuits. Correct any faults;
- Measure the forward and reflected power levels by inserting a reflected power meter (eg BIRD Model 43 with appropriate element) into the antenna cable;
  Disconnect the RG213 and LDF450 cables and insert the meter between them. The forward power should be consistent with the set output of the transmitter (recorded on the ATP Radio Setup & Configuration Checklist). The reverse power must be within a couple of percent of zero. See figure 8.2 and figure 8.3;

A high reflected power usually indicates a poor connection in the antenna cable or faulty antenna;

A low forward power usually indicates that the radio requires adjustment. This is a specialist task for a communications technician;

- Arrange for a communication technician to measure the received signal strength and compare with that recorded at setup. Refer figure 8.3. A low received signal strength will reduce radio coverage. The technician should correct radio or antenna faults to restore the signal to the original level;

  A rough indication of acceptable signal strength can be made by comparing receive levels of both radios using the Portable Radio Monitor (refer section 8.8.2).

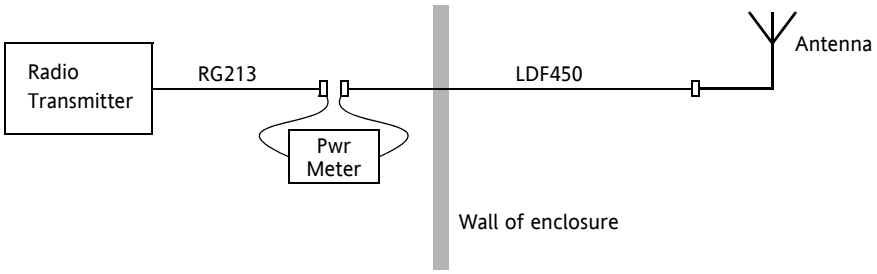

Figure 8.2: Reflected Power Meter—Inserting

WESTINGHOUSE signals AUSTRALIA

ATP Radio Setup & Configuration Checklist.

CLIENT: Queensland Rail. LOCATION:

PROJECT: SE190 Caboolture – Rockhampton. DATE: / /99.

TRACKSIDE SIGNAL STRENGTH MEASUREMENT.

TEST EQUIPMENT TYPE	TEST EQUIPMENT MODEL No.	SERIAL NUMBER	CALIBRATION DUE DATE.
MARCONI COMMUNICATIONS SERVICE MONITOR	2945A	133136044	OCTOBER 99

ANTENNA SETUP.

Test antenna consisted of a quarter wave whip antenna mounted on a magnetic base (RF Industries part no. MB3). The base was fitted with 3.6 meters of RG58c/u. Antenna tuned to 418.55 Mhz

METHOD

Mount antenna on stand in centre of track. Record position of antenna utilising stanchion numbers. Measure signal level on Marconi test set using spectrum analyser. Measure each transmitter signal individually by locking transmitter on to record measurement.

	Measurement Location	Signal Strength	Comments
Radio 1.		dBm	
Radio 2.		dBm	

Comments; _____

TESTER.....WITNESS.....

5807_947.doc Issue 2.0 14/10/99

WESTINGHOUSE signals AUSTRALIA

ATP Radio Setup & Configuration Checklist.

CLIENT: Queensland Rail. LOCATION:

PROJECT: SE190 Caboolture – Rockhampton. DATE: / .

INSTALLATION CONFIGURATION. (Circle which item applies)

Radio TX rated output: T700 @ 5w or 25w / T800 @ 5w or 25w.

Antenna Type: Dipole / 6db Col's / 9db Col's / 9db ext Col's / Yagi.

Mast Height (Mtrs above ground): 10m / 12m / 15m / Exist Structure - _____.

RADIO SETTINGS & ADJUSTMENTS.

DEVIATION	Serial No.	Initial Setting.	Final Setting.	Data Tone input level	Comments
Radio 1.		kHz	kHz		
Radio 2.		kHz	kHz		

INITIAL SETTING	Fwd Pwr Dummy load.	Frequency Error	Fwd Pwr Antennas.	Rev Pwr Antennas.	Adjustment Required.
Radio 1.					YES / NO
Radio 2.					YES / NO

FINAL POWER	Fwd Pwr Dummy load.	Frequency Error	Fwd Pwr Antennas.	Rev Pwr Antennas.	Load In Amps.
Radio 1.					
Radio 2.					

Configuration Changes made/required; _____

Comments; _____

TESTER.....WITNESS.....

Max Reverse Power: 0.25W ## Deviation Setting: 3.0 - 3.5kHz ## Input Current 1.7 – 2.4 amps.

5807_947.doc Issue 2.0 14/10/99

Figure 8.3: ATP Radio Setup & Configuration Checklist

8.8 Verification of Transmissions

8.8.1 Data Checking

Checking the transmitted data would only be required where there was an expectation that the encoder data may have been incorrectly designed. This function would normally be performed by a Signal Engineer.

The state of inputs and outputs can be determined using MoviolaW or the Diagnostic Module Logging Package or GETLOG.

For information on using these tools, see:

- Appendix B — Diagnostic Module Technician Interface;
- Appendix C — Diagnostic Module Logging Package;
- Appendix D — MoviolaW;
- Appendix E — GETLOG Utility.

The site printouts show the logic used for generation of the WCM output data.

The Portable Radio Monitor displays the entrance speeds for each route. The data received on the PRM can be correlated against that expected for the specific input combination. The operation of the PRM is described in the WESTECT ATP Portable Radio Monitor User Manual.

8.8.2 Coverage

Adequate radio coverage should be obtained for all line sections extending from the Station Approach Signal transponder group in the Up direction to the Station Approach Signal transponder group in the Down direction while also covering the whole station area.

Radio coverage can be checked using the Portable Radio Monitor (PRM).

The primary indication will be by receipt of correct messages on the PRM. A high impedance volt meter can be connected to the monitor point on the PRM. This output can be used to give an indication of received signal strength.

The PRM can be moved through the coverage area and the received error rate and the signal strength monitored.

Refer to the WESTECT ATP System Design Manual for assistance with resolving radio coverage problems.

9. WESTECT TRANSPONDERS—FAULT FINDING AND REPLACEMENT

9.1 Introduction

This section details the first-line maintenance procedures for track mounted transponders associated with the WESTECT ATP system.

First-line maintenance is limited to:

- Checking transponders for correct operation using Portable Transponder Monitor (PTM) and a PC;
- Removal of faulty transponders;
- Programming new transponders using existing data base file, programmer and printer;
- Reinstallation;
- Verification of installed transponders using transponder allocation drawings.

9.2 Equipment

Equipment that may be required for this task includes:

- Portable transponder monitor (including PC);
- WESTECT ATP Portable Transponder Monitor User Manual;
- Safety equipment (refer to section 9.5);
- Transponder programmer (CTSS Remote, including PC, printer and adhesive labels).

9.3 System

Transponders are individual components and only relate to the total ATP system when read by trains. There is no system level testing appropriate.

9.4 Faulty Link Transponders

Faulty Link Transponders must be replaced *immediately* in Direct Traffic Control (DTC) territory.

Immediate replacement is necessary because failure of a Link Transponder prevents the operation of incorrect route (wrong road) detection.

9.5 Personal Safety

Transponders are installed in carriers and are mounted on sleepers between rails. Personnel checking transponders using the Portable Transponder Monitor must enter the track vicinity and will be vulnerable to train movement.

SAFETY
WARNING

You must observe the personal safety requirements of section 1.10.

9.6 Checking Transponders

Transponders are checked using the Portable Transponder Monitor (PTM). Use of this equipment is described in the PTM manual.

Note: ***The PTM does not allow for recording the transponder identification along with the data recorded from the transponder. It is necessary to complete the transponder test form along with each transponder tested. Each transponder in a group should be tested.***

It is not always possible to correlate a reported error to a specific transponder within a group.

The most common failure modes are:

- transponder cannot be read, or;
- transponder can be read but with a loss of sensitivity.

It is possible that track gangs may have relocated transponders out of position. It is extremely unlikely that data within the transponders will have changed.

Each transponder carrier has an engraved plate with the unique identification of the transponder. This identification can be used for ascertaining that the transponder has been installed in the correct location and sequence by reference to the transponder allocation drawings, the Transponder Source File and the Transponder Group Summary printout.

The Portable Transponder Monitor will display the following data:

- Transponder data (not usually used);
- Transponder CRC;
- Transponder type;
- Transponder direction;
- Extremity;
- Transponder sequence number.

The Transponder CRC is the only data that must be checked against the transponder group summary printout. A correct CRC check means that all other fields are correct.

The other data is provided to assist users in the checking process.

Check that:

- The transponders are installed in the correct location according the identity plate and the transponder allocation drawings;
- Each transponder in a group is in the correct sequence;
- That the first and last transponder of each group is set with the extremity = Y;
- The CRC matches that on the source data for the specific identification;
- the transponder is correctly mounted and is not damaged.

Any faulty or suspect transponder must be replaced with a newly programmed transponder.

The PRM will only log the 100 most recently read transponders. These are not cross referenced to the transponder identification. It is possible to rename the log file to retain it for later use through DOS commands. The log file must be renamed back to `STORED.DAT` for later viewing and printing as they cannot be viewed using standard DOS commands.

9.7 Programming

Transponder programming is performed using the WESTECT Transponder Programmer and a PC with the CTSS-Remote software.

The operation of the equipment is described in the WESTECT ATP Transponder Configuration Sub-System User Manual.

Note: ***It is essential the correct configuration procedures are maintained that enforce the site data being kept up to date with the central data.***

Transponders should be programmed and checked in accordance with the procedures given in the manual. The sealing plug must be inserted using the WRSA approved tools and adhesives. Transponders should immediately be labelled.

9.8 Installation

Installation of transponders is described in Westinghouse Rail Systems Australia work instruction WIS036. This document describes:

- Correct installation of transponder on Timber, Steel or Concrete Sleepers;
- Correct location of Transponders with respect to signals and other track features.

Note: ***Transponders must be installed at the correct location. Failure to do so may inhibit the correct movement of trains.***

9.9 Verification

Transponders should be verified using the Portable Transponder Monitor after installation.

APPENDIX A—MODULE DESCRIPTIONS

This appendix describes:

- characteristics;
- function;
- operation;
- configuration, and;
- external connections;

of each WESTRACE module.

A.1 Vital Logic Module (VLM6)

All WESTRACE systems have a Vital Logic Module as its processing core. The VLM6 is one of the Vital Logic Module types in service.

A WESTRACE Hot Standby system comprises a pair of fully duplicated installations in a symmetrical arrangement, such that one installation is in 'on-line' mode (in control of the railway), whilst the other is in 'standby' mode. Each installation has an VLM6 at the processing core and the service provided by a particular installation is determined by setting links on a backplane card.

A.1.1 VLM6 Description

The VLM6 comprises two printed circuit boards:

- VLC6 (Vital Logic Card);
- OPC (Output Power Card).

The individual boards are interconnected by means of the VLE backplane, and also by a Universal Hot Standby Vital Backplane Card (UHVBC). Links on this card (CONF1 and CONF2) determine the service provided by the particular WESTRACE installation as decribed in section A.1.2.3.

A VLM6 occupies slots 2 to 3 in housing 1 of a WESTRACE installation. The OPC is in Slot 2 and the VLC6 is in Slot 3. *Slot 1 in housing 1 must have a Blanker card inserted*.

A.1.1.1 VLM6 Vital Logic Card (VLC6) Description

The VLC6 is the system's central processing module. It controls communications between the system modules and performs all Application Logic processing to determine the current state of all vital and non-vital outputs.

The VLC6 contains in PROM the Configuration Element Data (CED) generated by the GCSS. It has configuration data version switches (SW1) that it uses to ensure the CED in PROM is the correct version.

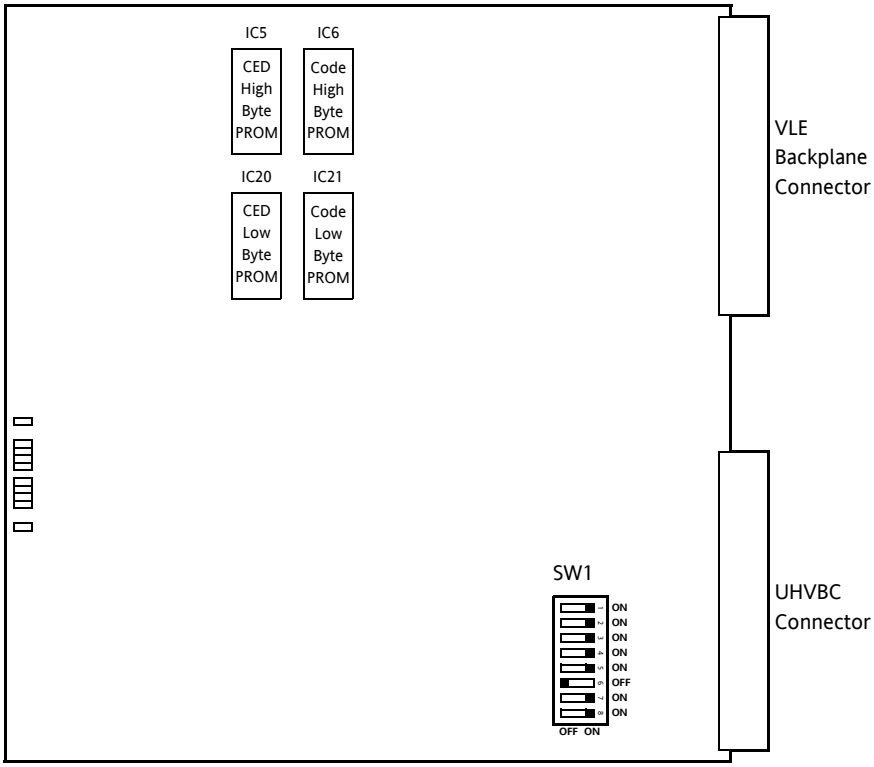

Figure A.1: VLC6—Layout—VLM6

A.1.1.2 VLM6 Output Power Card (OPC) Description

The OPC produces power to drive the OPCR and VSEV. The VSEV enables outputs for the vital communications modules and the OPC isolates power from both of these outputs when safe operation of the system cannot be guaranteed.

A.1.1.3 VLM6 Universal Hot Standby Vital Backplane Card (UHVBC) Description

The UHVBC is a small, half height, printed circuit board installed directly behind the lower connectors of the VLM.

It provides:

- a direct connection between the OPC and VLC cards (HVLC, VLC5 or VLC6), that constitute the VLM;
- 24 links (LK 1 to LK 24, see figure A.2) that determine the unique physical address of the WESTRACE installation. The setting of these links is checked against the data contained in the Application Data PROMS, thereby preventing installation and execution of an incorrect version of application data;
- 2 links (CONF1 & CONF2, see figure A.2 and table A1) that determine the operation of the VLM. The setting of these links determines whether the VLM is operating in Stand-alone or Hot Standby mode. If it is in Hot Standby Mode they are also determine whether it is the default On Line or Standby system;
- 2 links (LK 25 and LK 26, see figures A.2 and A.3, and table A1) provide VSEV voltage to the VLC when these links are made.

Caution: ***Links LK 25 and LK 26 must be open if the UHVBC is used with an HVLC or VLC5, otherwise the VSEV voltage may be shorted to ground.***

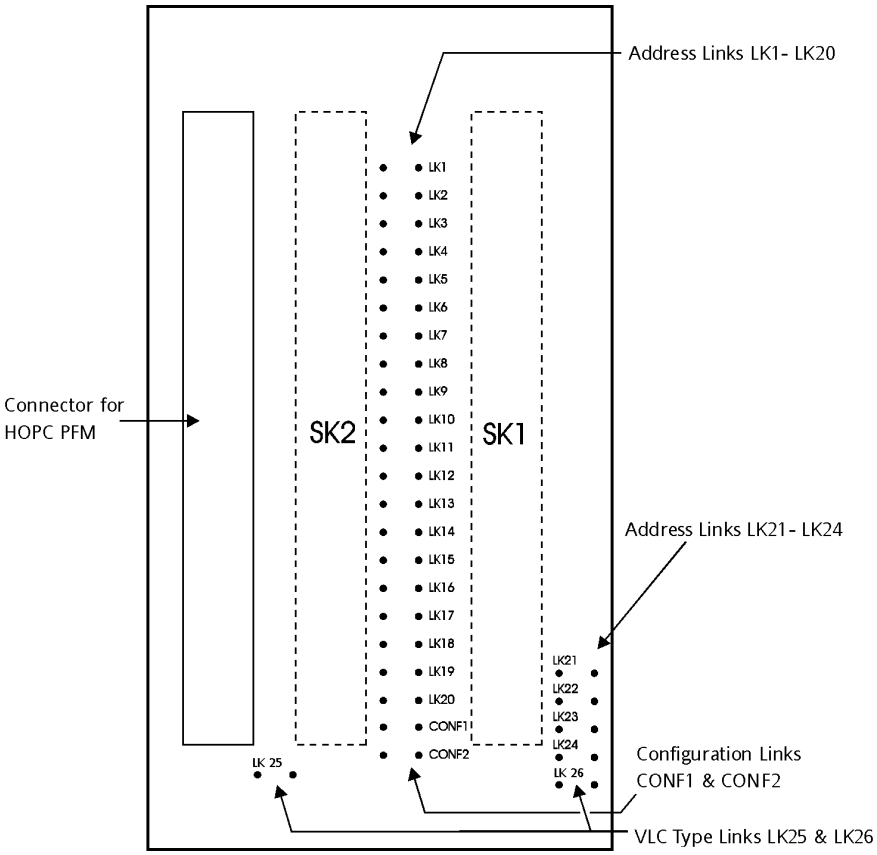

Figure A.2: UHVBC—Rear Side View—VLM6

Note: ***CONF1 and CONF2 in figure A.2 correspond to J25 and J26 on the GCSS Installation Report (figure A.3).***

A.1.2 VLM6 Configuration

A.1.2.1 VLM6 Vital Logic Card (VLC6) Configuration

The CED is contained in two PROMs, a high byte and a low byte (see figure A.1). The low byte PROM is in socket IC20 and the high byte PROM is in socket IC5.

The settings for switch SW1 are provided on the Installation Report generated by GCSS from the Application Data. Figure A.3 shows an example for Installation Reports generated in GCSS 6 and GCSS 7.

Installation Assembly Details

Address Jumpers

J01	o o	J14	o---o
J02	o o	J15	o o
J03	o---o	J16	o o
J04	o o	J17	o---o
J05	o---o	J18	o---o
J06	o o	J19	o o
J07	o---o	J20	o---o
J08	o---o	J21	o---o
J09	o o	J22	o o
J10	o---o	J23	o---o
J11	o---o	J24	o---o
J12	o---o	J25	See Application Document
J13	o o	J26	o---o

Data Version Switches

1	ON
2	ON
3	ON
4	ON
5	ON
6	OFF
7	ON
8	ON

Filename: EPA1.INS Version 04.0000 Status: Approved 13:56:14 Fri, Sep 18, 1998

GCSS 6 Installation Report

Set LK1–LK24 on card as shown
by J01–J24 on report
J25 = CONF1
J26 = CONF2

SW1

1	ON
2	ON
3	ON
4	ON
5	ON
6	OFF
7	ON
8	ON

OFF ON

GCSS 7 Installation Report

Installation Assembly Details

Address and Configuration Link Jumpers

P1	o o	LK1	P15	o o	LK15
P2	o o	LK2	P16	o---o	LK16
P3	o o	LK3	P17	o---o	LK17
P4	o o	LK4	P18	o---o	LK18
P5	o---o	LK5	P19	o o	LK19
P6	o---o	LK6	P20	o---o	LK20
P7	o o	LK7	P21	o---o	LK21
P8	o o	LK8	P22	o o	LK22
P9	o---o	LK9	P23	o---o	LK23
P10	o---o	LK10	P24	o---o	LK24
P11	o---o	LK11	P25	o ? o	CONF1 *
P12	o---o	LK12	P26	o---o	CONF2
P13	o o	LK13	P27	o o	UHVBC LK25
P14	o---o	LK14	P28	o o	UHVBC LK26

Data Version Switches

1	ON
2	ON
3	ON
4	ON
5	OFF
6	ON
7	ON
8	ON

* Open For Biased OFFLINE, Closed For Biased ONLINE

Filename: EJ1A.INS
Version 08.0001 Status: Not Approved 14:49:07, Thu, Jul 07, 2005 Page 1 of 1

Figure A.3: Typical GCSS Installation Reports and SW1 Settings—VLM6

A.1.2.2 VLM6 Output Power Card (OPC) Configuration

None

A.1.2.3 VLM6 Universal Hot Standby Vital Backplane Card (UHVBC) Configuration

Links LK1 to LK24 on the card must be set to the physical address of the system as shown on the GCSS Installation Report (figure A.3).

Links CONF1 and CONF2 must be set to the intended operation of the system (hot standby or stand-alone) as defined in the application data for the WESTRACE. See table A1.

Note: ***On the GCSS 6 Installation Report, CONF1 and CONF2 correspond to J25 and J26 respectively.***

The setting of links LK25 and LK26 must correspond to the intended VLC type to be used in the installation:

Link	Closed	Not Closed
CONF1	Biased to On-line	Biased to Off-line
CONF2	Stand-alone	Hot Standby
LK25[1]	VLC6	VLC5 and HVLC
LK26[1]	"	"

Table A1: CONF1, CONF2, LK25, LK26—Link Settings

1. LK25 and LK26 must be open or closed together.

A.1.3 VLM6 Indications

A.1.3.1 VLM6 Vital Logic Card (VLC6) Indications

A.1.3.1.1 Start Up Indications

Diagnostic LEDs display the module type code, shortly followed by a firmware version code (reflecting the firmware version installed in the module). Firmware version is displayed for approximately 8 seconds, after which all diagnostic LEDs extinguish.

A.1.3.1.2 Operation Indications

A single green Watchdog LED and a single yellow Watchdog LED are provided to indicate the module is operating correctly and to indicate the mode of operation:

- In On-line mode, the VLC6 flashes the green LED once per cycle, and the yellow LED to indicate IMB communications.
- In Standby mode, the VLC6 flashes the yellow LED once per cycle.

A.1.3.1.3 Fault Codes

The VLM6 fault codes written to the Fault Diagnostic Latch have the following meaning during normal operation. Some fault codes have different meanings during power-on initialisation and these have been explicitly declared.

The term 'Initialisation' refers to VLM6 Initialisation. Some VLM6 fault codes are used only in the VLM6 Standby Mode, and some, only in the VLM6 On-line Mode. These codes have been explicitly declared.

Module Sequence Numbers

In order for the module sequence numbers in the GCSS housing printout to match the module sequence numbers in the VLM6 fault codes, it is necessary for the GCSS user to assign sequence number 1 to the NCDM.

Block Fault Codes

CODE(H)	FAULT DESCRIPTION	ACTION
01	Second Negation Error	Indicates fault on other modules
03	PROM Checksum Error	Replace VLM6
04	Stack Guard Error	"
05	RAM Error	"
06	Interrupt Errors	"
07	Termination Error	"
08	Processor Error	"
09	Stack Error	"
0A	Run Time Error A	"
0B	Run Time Error B	"
0C	Run Time Error C	"
0D	Run Time Error D	"
0E	Run Time Error E	"
0F	Run Time Error F	"
10	Run Time Error G	"
11	Run Time Error H	"
12	Run Time Error I	"
13	Run Time Error J	"
14	Run Time Error K	"
15	Run Time Error L	"
16	Run Time Error M	"
17	Run Time Error N	"

Table A2: Fault Codes—Block—VLM6

CODE(H)	FAULT DESCRIPTION	ACTION
18	Run Time Error O	"
19	Run Time Error P	"
1A	Run Time Error Q	"
1B	Run Time Error R	"
1C	Run Time Error S	"
1D	Run Time Error T	"
1E	Run Time Error U	"
1F	Run Time Error V	"
20	Run Time Error W	"
21	Run Time Error X	"
22	Run Time Error Y	"
23	Run Time Error Z	Replace VLM6
2D	Health Monitoring Time Error	Indicates fault on other modules
2E	Health Monitoring Health Error	"
2F	Health Monitoring Scheduling Error	Replace VLM6
31	Master IMB Startup Timeout	"
32	Too Few IMB Calls	"
33	Master IMB Interface Error Too Many IMB Calls	"
34	Error code with system shutdown is the result of the invalid number of self test calls error, 'STIMBTooFewSTCalls'. Error code *without system shutdown* indicates IMB timeout of the non-vital diagnostic module. IMB Database Error	Replace VLM6 if shutdown occurred. Replace diagnostic module if shutdown did not occur.
35	Master IMB Timeout Module 01	Check other modules to identify one that caused VLM shutdown—ie reported a failure other than IMB timeout. Replace the identified module.
36	Master IMB Timeout Module 02	"
37	Master IMB Timeout Module 03	"
38	Master IMB Timeout Module 04	"
39	Master IMB Timeout Module 05	"
3A	Master IMB Timeout Module 06	"
3B	Master IMB Timeout Module 07	"
3C	Master IMB Timeout Module 08	"
3D	Master IMB Timeout Module 09	"
3E	Master IMB Timeout Module 10	"

Table A2: Fault Codes—Block—VLM6 ***(Continued)***

CODE(H)	FAULT DESCRIPTION	ACTION
3F	Master IMB Timeout Module 11	"
40	Master IMB Timeout Module 12	"
41	Master IMB Timeout Module 13	"
42	Master IMB Timeout Module 14	"
43	Master IMB Timeout Module 15	"
44	Master IMB Timeout Module 16	"
45	Master IMB Timeout Module 17	"
46	Master IMB Timeout Module 18	"
47	Master IMB Timeout Module 19	"
48	Master IMB Timeout Module 20	"
49	Master IMB Timeout Module 21	"
4A	Master IMB Timeout Module 22	"
4B	Master IMB Timeout Module 23	"
4C	Master IMB Timeout Module 24	"
4D	Master IMB Timeout Module 25	"
4E	Master IMB Timeout Module 26	"
4F	Master IMB Timeout Module 27	"
50	Master IMB Timeout Module 28	"
51	Master IMB Timeout Module 29	"
52	Master IMB Timeout Module 30	"
53	Master IMB Timeout Module 31	"
54	Master IMB Timeout Module 32	"
55	Master IMB Timeout Module 33	"
56	Master IMB Timeout Module 34	"
57	Master IMB Timeout Module 35	"
58	Master IMB Timeout Module 36	"
59	Master IMB Timeout Module 37	"
5A	Master IMB Data Error Module DM	Replace diagnostic module
5B	Master IMB Data Error Module 01	Replace module 01
5C	Master IMB Data Error Module 02	Replace module 02
5D	Master IMB Data Error Module 03	Replace module 03
5E	Master IMB Data Error Module 04	Replace module 04
5F	Master IMB Data Error Module 05	Replace module 05
60	Master IMB Data Error Module 06	Replace module 06

Table A2: Fault Codes—Block—VLM6 ***(Continued)***

CODE(H)	FAULT DESCRIPTION	ACTION
61	Master IMB Data Error Module 07	Replace module 07
62	Master IMB Data Error Module 08	Replace module 08
63	Master IMB Data Error Module 09	Replace module 09
64	Master IMB Data Error Module 10	Replace module 10
65	Master IMB Data Error Module 11	Replace module 11
66	Master IMB Data Error Module 12	Replace module 12
67	Master IMB Data Error Module 13	Replace module 13
68	Master IMB Data Error Module 14	Replace module 14
69	Master IMB Data Error Module 15	Replace module 15
6A	Master IMB Data Error Module 16	Replace module 16
6B	Master IMB Data Error Module 17	Replace module 17
6C	Master IMB Data Error Module 18	Replace module 18
6D	Master IMB Data Error Module 19	Replace module 19
6E	Master IMB Data Error Module 20	Replace module 20
6F	Master IMB Data Error Module 21	Replace module 21
70	Master IMB Data Error Module 22	Replace module 22
71	Master IMB Data Error Module 23	Replace module 23
72	Master IMB Data Error Module 24	Replace module 24
73	Master IMB Data Error Module 25	Replace module 25
74	Master IMB Data Error Module 26	Replace module 26
75	Master IMB Data Error Module 27	Replace module 27
76	Master IMB Data Error Module 28	Replace module 28
77	Master IMB Data Error Module 29	Replace module 29
78	Master IMB Data Error Module 30	Replace module 30
79	Master IMB Data Error Module 31	Replace module 31
7A	Master IMB Data Error Module 32	Replace module 32
7B	Master IMB Data Error Module 33	Replace module 33
7C	Master IMB Data Error Module 34	Replace module 34
7D	Master IMB Data Error Module 35	Replace module 35
7E	Master IMB Data Error Module 36	Replace module 36
7F	Master IMB Data Error Module 37	Replace module 37

Table A2: Fault Codes—Block—VLM6 ***(Continued)***

Specific VLM6 Initialisation Fault Codes

CODE(H)	FAULT DESCRIPTION	ACTION
80	CED Checksum Error	Replace CED PROM
81	CED GCSS Compatibility Index Error	"
82	CED UHVBC Link Error	Check installation address and UHVBC linking
83	CED UHVBC Link Parity Error	"
84	CED Data Version Error	Check data version switch settings
85	CED Data Error	Replace CED PROM
86	IIHCL Data Consistency Error	"
87	CED Number Of Logic States Error	"
88	CED Module Number Error	"
89	CED Slave Kind Error	"
8A	CED Module Compatibility Index Error	Replace CED PROM
8B	CED Module Compatibility Index Parity Error	"
8C	CED Module Type Error	"
8D	IHCL Message Sequence Error	Replace VLM6
8E	IHCL Compatibility Index Error	"
8F	IHCL Timer Checksum Error	"
90	CED Timer Error	Replace CED PROM
91	CED Initial Data Error	"
92	CED Global Data Error	"
93	CED Fixed Data Error	"
94	CED Variable Data Error	"
95	CED Node Type Error	"
96	CED Depth Error	"
97	CED Pointer Error	"
98	IHCL Installation Address Error	Check installation address and VBC linking.
99	CED Logic Error	Replace CED PROM
9A	CED Number of Logic States Error	"
9B	CED Number of Timers Error	"
9C	Invalid Timer Calculation Error	Replace VLM6
9D	Invalid Timer Count Error	"
9E	OPCR State Error	"
9F	Mnemonic Error	"

Table A3: Fault Codes—Specific Initialisation—VLM6

CODE(H)	FAULT DESCRIPTION	ACTION
A0	IMB Data Length Error	Indicates fault on another module
A1	Invalid Timer Error	Replace VLM6
A2	IMB Communication Time Error	Indicates fault on another module
A3	SCC Hardware Error	Replace VLM6
A4	IMB Module Number Error	Indicates fault on another module
A5	IMB Parity Error	"
A6	CED Initial State Error	Replace CED PROM
A7	Sequence Error	Replace VLM6
A8	IMB Port Address Range Error	Indicates fault on another module
A9	SCC Hardware Error	Replace VLM6
AB	Sync Period Expired with no IHCL Message Error	"
AC	CED Message Byte Number Error	Replace CED PROM
AD	CED Message Bit Number Error	"
AE	IMB Input Message Length Error	Indicates fault on another module
AF	Invalid System Configuration Data Error	Replace VLM6
B0	Consistency Error	"
B1	IHCL GCSS Version Number Error	Check data version switch settings
B5	Parameter Error	Replace VLM6
B6	Output Message Length Error	"
B8	Semaphore Error	Indicates fault on DPRAM
BD	DPRAM Initialisation Error	Replace VLM6
C0	Non-vital Message Error	Indicates fault on DPRAM
C1	IMB Number I/O Bits Error	Indicates fault on another module
C4	IMB Timeout Error	"
C5	IMB Scheduler Error	"
C6	CED Invalid Data Error	Replace CED PROM
C7	CED System Configuration Error	"
C8	CED Layout Error	"
C9	Timer Difference Error	Replace VLM6
CA	Timer Expiry Difference Error	"
D2	Logic Sequence Error	"
D3	Depth Check Error	"
D4	Sequence Error	"
D5	Sequence Error	"
D6	Progress Error	"

Table A3: Fault Codes—Specific Initialisation—VLM6 *(Continued)*

CODE(H)	FAULT DESCRIPTION	ACTION
D7	Invalid Data Error	"
D9	IHCL Number of Logic States Error	Replace CED ROM
DA	Too Many Invalid IHCL Messages Received Error	Replace VLM6
DB	Last Pointer Error	Replace CED ROM
DC	OPCR Initialise Error	Check supply to OPC. Power off system and restart after 40 seconds. Replace the OPC or OPC PFM when the fault persists.
DD	NOPCR Error	Replace VLM6
DF	Initial Maximum Time Error	Reduce the number of timers, the logic, or the I/O capacity of the VLM6. Replace the VLM6 if the problem persists.
E0	Initial Minimum Time Error	Increase the number of timers, the logic, or the I/O capacity of the VLM6. Replace the VLM6 if the problem persists.
E1	Initial Sequence Error	Replace VLM6
E2	Maximum Time Error	"
E3	Minimum Time Error	"
E4	Sequence Error	"
E6	CED Checksum Error	Replace CED PROM
E7	Comp Read Data Error	Replace VLM6
E8	Comp Read Pointer Error	"
E9	Comp Write Pointer Error	"
EF	CED DRAM Fixed Data Error	Replace CED PROM
F0	Number of Timers Error	"
F1	Number of Comp Timers Error	"
F2	Cycle Time > 1.3 sec Error	Too much logic and too many modules. Check installation design.
F3	Delay 150 ms Error	Replace VLM6
F4	APPDEL Value Error	"
F6	Time Stamp Error	"
F8	Time Stamp Error	"
FA	Time Stamp Error	"
FC	CED DPRAM Variable Data Error	Replace CED PROM
FD	Time Stamp Error	Replace VLM6
FE	Mode State Error	"
FF	PIT Access Error	"

Table A3: Fault Codes—Specific Initialisation—VLM6 *(Continued)*

A.1.3.2 VLM6 Output Power Card (OPC) Indications

None

A.1.3.3 VLM6 Universal Hot Standby Vital Backplane Card (UHVBC) Indications

None.

A.1.4 VLM6 External Connections

All external connections to the VLM6 are made via the HOPC PFM which plugs directly into the UHVBC.

The HOPC PFM External Connector is a 19 way plug and socket Klippon type BLA/SLA.

Figure A.4 depicts the external connection details of the HOPC PFM.

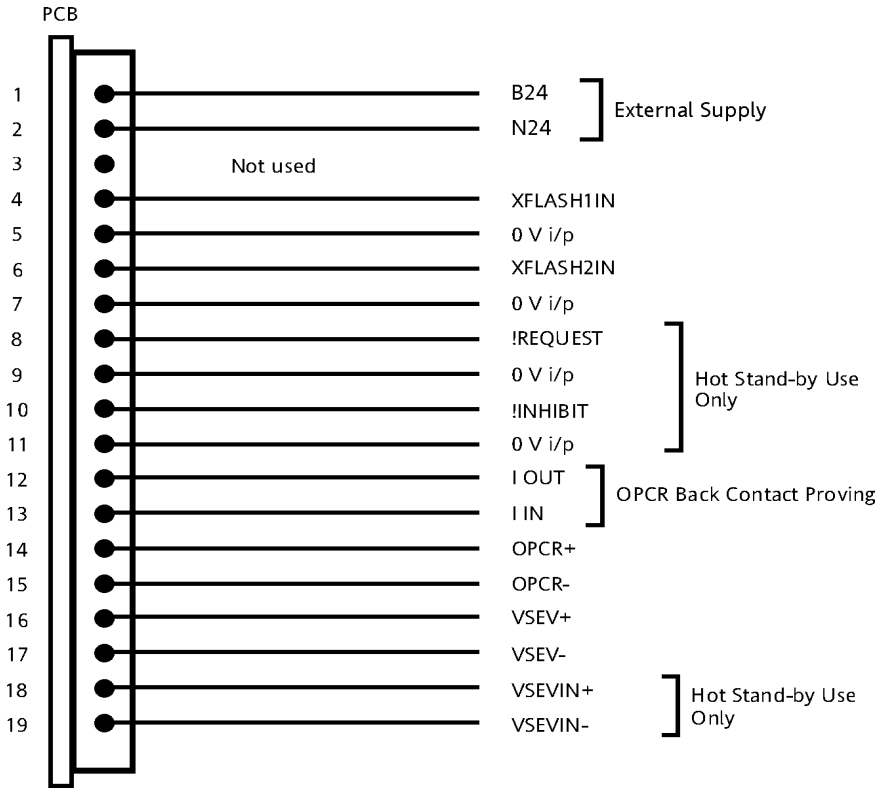

Figure A.4: External Connections—HOPC PFM—VLM6

The maximum continuous current that passes in each of the connections is:

24 V supply	4 A
OPCR Drive	0.8 A
VSEV	1 A
OPCR Back Contact	20 mA

A.2 Vital Logic Module (VLM5)

All WESTRACE systems have a Vital Logic Module as its processing core. The VLM5 is one of the Vital Logic Module types in service.

A WESTRACE Hot Standby system comprises a pair of fully duplicated installations in a symmetrical arrangement, such that one installation is in ‘on-line’ mode (in control of the railway), whilst the other is in ‘standby’ mode. Each installation has an VLM5 at the processing core and the service provided by a particular installation is determined by setting links on a backplane card.

A.2.1 VLM5 Description

The VLM5 comprises two printed circuit boards:

- VLC5 (Vital Logic Card);
- OPC (Output Power Card).

The individual boards are interconnected by means of the VLE backplane, and also by a Hot Standby Vital Backplane Card (HVBC). Links on this card (CONF1 and CONF2) determine the service provided by the particular WESTRACE installation.

A VLM5 occupies slots 2 to 3 in housing 1 of a WESTRACE installation. The OPC is in Slot 2 and the VLC5 is in Slot 3. *Slot 1 in housing 1 must have a Blanker card inserted*.

A.2.1.1 VLM5 Vital Logic Card (VLC5) Description

The VLC5 is the system's central processing module. It controls communications between the system modules and performs all Application Logic processing to determine the current state of all vital and non-vital outputs.

The VLC5 contains in PROM the Configuration Element Data (CED) generated by the GCSS. It has configuration data version switches (SW1) that it uses to ensure the CED in PROM is the correct version.

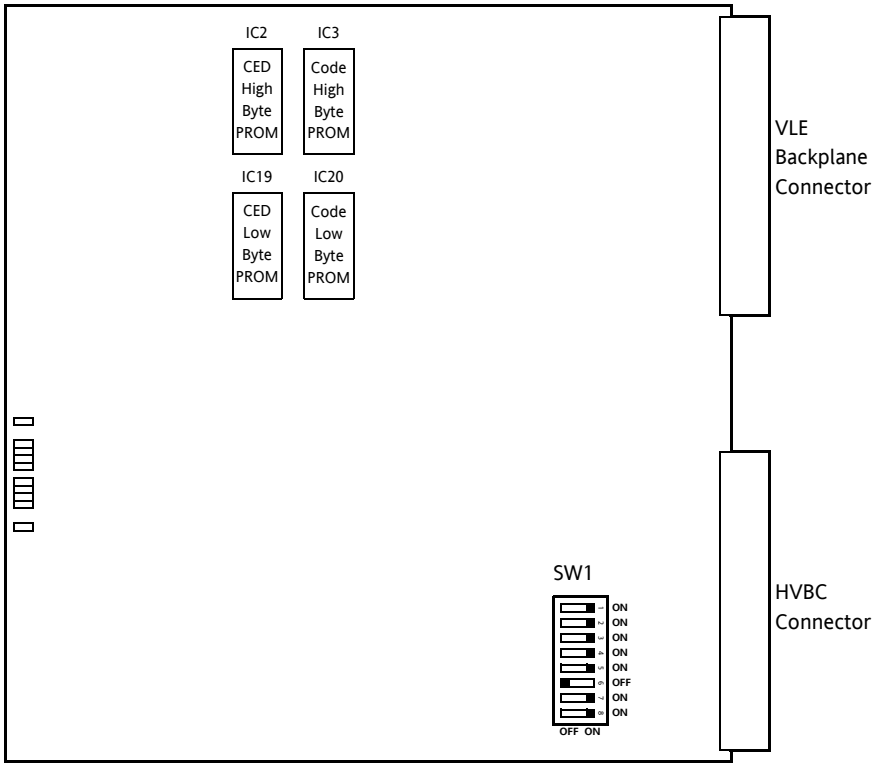

Figure A.5: Layout—VLC5—VLM5

A.2.1.2 VLM5 Output Power Card (OPC) Description

The OPC produces power to drive the OPCR and VSEV. The VSEV enables outputs for the vital communications modules and the OPC isolates power from both of these outputs when safe operation of the system cannot be guaranteed.

A.2.1.3 VLM5 Hot Standby Vital Backplane Card (HVBC) Description

Note: ***A UHVBC can also be used provided LK25 and LK26 are not closed. See sections A.1.1.3 and A.1.2.3 for details.***

The HVBC is a small (half height) printed circuit board installed directly behind the lower connectors of the VLM5.

It provides:

- a direct connection between the OPC and VLC5 cards, that constitute the VLM5;
- 24 links (LK1 to LK24, see figure A.6) that determine the unique physical address of the WESTRACE installation. The setting of these links is checked against the data contained in the Application Data PROMS, thereby preventing installation and execution of an incorrect version of application data;
- 2 links (CONF1 and CONF2, see figures A.6 and A.7, and table A4) that determine the operation of the VLM5. The setting of these links determines whether the VLM5 is operating in Stand-alone or Hot

Standby mode. If it is in Hot Standby Mode they are also determine whether it is the default On Line or Standby system.

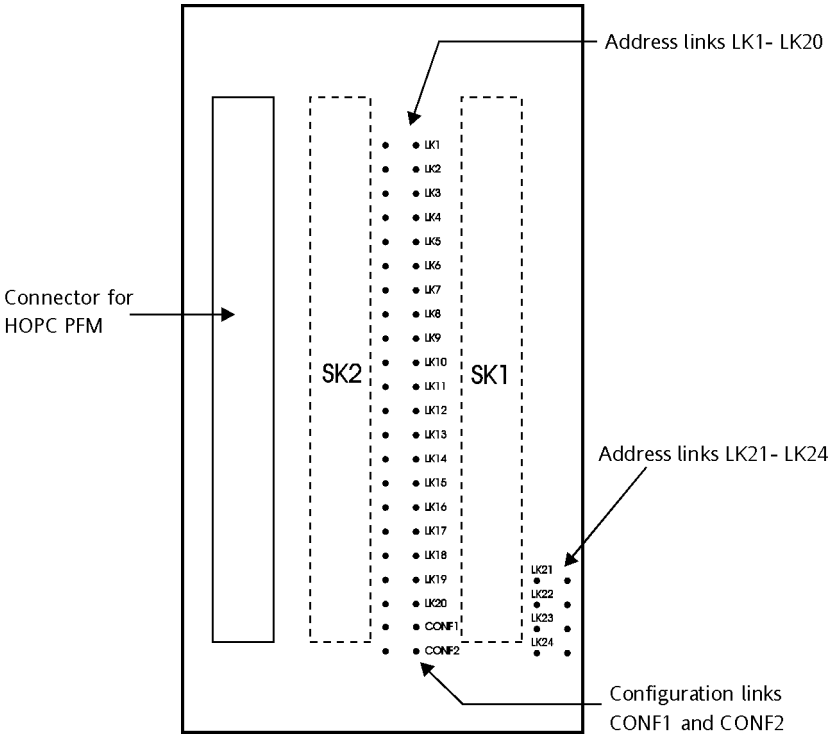

Figure A.6: HVBC—Rear Side View—VLM5

Note: ***CONF1 and CONF2 in figure A.6 correspond to J25 and J26 on the GCSS Installation Report. See figure A.7.***

A.2.2 VLM5 Configuration

A.2.2.1 VLM5 Vital Logic Card (VLC5) Configuration

The CED is contained in two PROMs, a high byte and a low byte (see figure A.5). The low byte PROM is in socket IC19 and the high byte PROM is in socket IC2.

The settings for switch SW1 are provided on the Installation Report generated by GCSS from the Application Data. Figure A.7 shows an example for installation reports generated in GCSS 6 and GCSS 7.

Installation Assembly Details

Address Jumpers

J01	o o	J14	o---o
J02	o o	J15	o o
J03	o---o	J16	o o
J04	o o	J17	o---o
J05	o---o	J18	o---o
J06	o o	J19	o o
J07	o---o	J20	o---o
J08	o---o	J21	o---o
J09	o o	J22	o o
J10	o---o	J23	o---o
J11	o---o	J24	o---o
J12	o---o	J25	See Application Document
J13	o o	J26	o---o

Data Version Switches

1	ON
2	ON
3	ON
4	ON
5	ON
6	OFF
7	ON
8	ON

Filename: EPA1.INS Version 04.0000 Status: Approved 13:56:1 Fri, Sep 18, 1998

GCSS 6 Installation Report

Set LK1–LK24 on card as shown
by J01–J24 on report
J25 = CONF1
J26 = CONF2

SW1

1	ON
2	ON
3	ON
4	ON
5	ON
6	OFF
7	ON
8	ON

OFF ON

GCSS 7 Installation Report

Installation Assembly Details

Address and Configuration Link Jumpers

P1	o o	LK1	P15	o o	LK15
P2	o o	LK2	P16	o---o	LK16
P3	o o	LK3	P17	o---o	LK17
P4	o o	LK4	P18	o---o	LK18
P5	o---o	LK5	P19	o o	LK19
P6	o---o	LK6	P20	o---o	LK20
P7	o o	LK7	P21	o---o	LK21
P8	o o	LK8	P22	o o	LK22
P9	o---o	LK9	P23	o---o	LK23
P10	o---o	LK10	P24	o---o	LK24
P11	o---o	LK11	P25	o ? o	CONF1 *
P12	o---o	LK12	P26	o---o	CONF2
P13	o o	LK13	P27	o o	UHVBC LK25
P14	o---o	LK14	P28	o o	UHVBC LK26

Data Version Switches

1	ON
2	ON
3	ON
4	ON
5	OFF
6	ON
7	ON
8	ON

* Open For Biased OFFLINE, Closed For Biased ONLINE

Filename: EJ1A.INS
Version 08.0001 Status: Not Approved 14:49:07, Thu, Jul 07, 2005 Page 1 of 1

Figure A.7: Typical GCSS Installation Reports and SW1 Settings—VLM5

A.2.2.2 VLM5 Output Power Card (OPC) Configuration

None

A.2.2.3 VLM5 Hot Standby Vital Backplane Card (HVBC) Configuration

Links LK1 to LK24 on the card must be set to the physical address of the system as shown on the GCSS Installation Report (figure A.7).

Links CONF1 and CONF2 must be set to the intended operation of the system (hot standby or stand-alone) as defined in the application data for the WESTRACE. See table A4.

Note: ***On the GCSS 6 Installation Report, CONF1 and CONF2 correspond to J25 and J26 respectively.***

Link	Closed	Not Closed
CONF1	Biased to On-line	Biased to Off-line
CONF2	Stand-alone	Hot Standby

Table A4: CONF1, CONF2—Link Settings

A.2.3 VLM5 Indications

A.2.3.1 VLM5 Vital Logic Card (VLC5) Indications

A.2.3.1.1 Start Up Indications

Diagnostic LEDs display the module type code, shortly followed by a firmware version code (reflecting the firmware version installed in the module). Firmware version is displayed for approximately 8 seconds, after which all diagnostic LEDs extinguish.

A.2.3.1.2 Operation Indications

A single green Watchdog LED and a single Yellow Watchdog LED are provided to indicate the module is operating correctly and to indicate the mode of operation.

In On-line mode, the VLC5 flashes the green LED once per cycle and the yellow LED around the IMB communications.

In Standby mode, the VLC5 flashes the yellow LED once per cycle.

A.2.3.1.3 Fault Codes

The VLM5 fault codes written to the Fault Diagnostic Latch have the following meaning during normal operation. Some fault codes have different meanings during power-on initialisation and these have been explicitly declared.

The term 'Initialisation' refers to VLM5 Initialisation. Some VLM5 fault codes are used only in the VLM5 Standby Mode, and some, only in the VLM5 On-line Mode. These codes have been explicitly declared.

Module Sequence Numbers

In order for the module sequence numbers in the GCSS housing printout to match the module sequence numbers in the VLM5 fault codes, it is necessary for the GCSS user to assign the highest sequence number to the NVC/DM.

Block Fault Codes

CODE(H)	FAULT DESCRIPTION	ACTION
01	Second Negation Error	Indicates fault on other modules
03	PROM Checksum Error	Replace VLM5
04	Stack Guard Error	"
05	RAM Error	"
06	Interrupt Errors	"
07	Termination Error	"
08	Processor Error	"
09	Stack Error	"
0A	Run Time Error A	"
0B	Run Time Error B	"
0C	Run Time Error C	"
0D	Run Time Error D	"
0E	Run Time Error E	"
0F	Run Time Error F	"
10	Run Time Error G	"
11	Run Time Error H	"
12	Run Time Error I	"
13	Run Time Error J	"
14	Run Time Error K	"
15	Run Time Error L	"
16	Run Time Error M	"
17	Run Time Error N	"
18	Run Time Error O	"
19	Run Time Error P	"

Table A5: Fault Codes—Block—VLM5

CODE(H)	FAULT DESCRIPTION	ACTION
1A	Run Time Error Q	"
1B	Run Time Error R	"
1C	Run Time Error S	"
1D	Run Time Error T	"
1E	Run Time Error U	"
1F	Run Time Error V	"
20	Run Time Error W	"
21	Run Time Error X	"
22	Run Time Error Y	"
23	Run Time Error Z	Replace VLM5
2D	Health Monitoring Time Error	Indicates fault on other modules
2E	Health Monitoring Health Error	"
2F	Health Monitoring Scheduling Error	Replace VLM5
31	Master IMB Startup Timeout	"
32	Too Few IMB Calls	"
33	Master IMB Interface Error Too Many IMB Calls	"
34	Error code with system shutdown is the result of the invalid number of self test calls error, 'STIMBTooFewSTCalls'. Error code *without system shutdown* indicates IMB timeout of the non-vital diagnostic module. IMB Database Error	Replace VLM5 if shutdown occurred. Replace diagnostic module if shutdown did not occur.
35	Master IMB Timeout Module 01	Check other modules to identify one that caused VLM shutdown—ie reported a failure other than IMB timeout. Replace the identified module.
36	Master IMB Timeout Module 02	"
37	Master IMB Timeout Module 03	"
38	Master IMB Timeout Module 04	"
39	Master IMB Timeout Module 05	"
3A	Master IMB Timeout Module 06	"
3B	Master IMB Timeout Module 07	"
3C	Master IMB Timeout Module 08	"
3D	Master IMB Timeout Module 09	"
3E	Master IMB Timeout Module 10	"
3F	Master IMB Timeout Module 11	"
40	Master IMB Timeout Module 12	"

Table A5: Fault Codes—Block—VLM5 ***(Continued)***

CODE(H)	FAULT DESCRIPTION	ACTION
41	Master IMB Timeout Module 13	"
42	Master IMB Timeout Module 14	"
43	Master IMB Timeout Module 15	"
44	Master IMB Timeout Module 16	"
45	Master IMB Timeout Module 17	"
46	Master IMB Timeout Module 18	"
47	Master IMB Timeout Module 19	"
48	Master IMB Timeout Module 20	"
49	Master IMB Timeout Module 21	"
4A	Master IMB Timeout Module 22	"
4B	Master IMB Timeout Module 23	"
4C	Master IMB Timeout Module 24	"
4D	Master IMB Timeout Module 25	"
4E	Master IMB Timeout Module 26	"
4F	Master IMB Timeout Module 27	"
50	Master IMB Timeout Module 28	"
51	Master IMB Timeout Module 29	"
52	Master IMB Timeout Module 30	"
53	Master IMB Timeout Module 31	"
54	Master IMB Timeout Module 32	"
55	Master IMB Timeout Module 33	"
56	Master IMB Timeout Module 34	"
57	Master IMB Timeout Module 35	"
58	Master IMB Timeout Module 36	"
59	Master IMB Timeout Module 37	"
5A	Master IMB Data Error Module DM	Replace diagnostic module
5B	Master IMB Data Error Module 01	Replace module 01
5C	Master IMB Data Error Module 02	Replace module 02
5D	Master IMB Data Error Module 03	Replace module 03
5E	Master IMB Data Error Module 04	Replace module 04
5F	Master IMB Data Error Module 05	Replace module 05
60	Master IMB Data Error Module 06	Replace module 06
61	Master IMB Data Error Module 07	Replace module 07
62	Master IMB Data Error Module 08	Replace module 08

Table A5: Fault Codes—Block—VLM5 ***(Continued)***

CODE(H)	FAULT DESCRIPTION	ACTION
63	Master IMB Data Error Module 09	Replace module 09
64	Master IMB Data Error Module 10	Replace module 10
65	Master IMB Data Error Module 11	Replace module 11
66	Master IMB Data Error Module 12	Replace module 12
67	Master IMB Data Error Module 13	Replace module 13
68	Master IMB Data Error Module 14	Replace module 14
69	Master IMB Data Error Module 15	Replace module 15
6A	Master IMB Data Error Module 16	Replace module 16
6B	Master IMB Data Error Module 17	Replace module 17
6C	Master IMB Data Error Module 18	Replace module 18
6D	Master IMB Data Error Module 19	Replace module 19
6E	Master IMB Data Error Module 20	Replace module 20
6F	Master IMB Data Error Module 21	Replace module 21
70	Master IMB Data Error Module 22	Replace module 22
71	Master IMB Data Error Module 23	Replace module 23
72	Master IMB Data Error Module 24	Replace module 24
73	Master IMB Data Error Module 25	Replace module 25
74	Master IMB Data Error Module 26	Replace module 26
75	Master IMB Data Error Module 27	Replace module 27
76	Master IMB Data Error Module 28	Replace module 28
77	Master IMB Data Error Module 29	Replace module 29
78	Master IMB Data Error Module 30	Replace module 30
79	Master IMB Data Error Module 31	Replace module 31
7A	Master IMB Data Error Module 32	Replace module 32
7B	Master IMB Data Error Module 33	Replace module 33
7C	Master IMB Data Error Module 34	Replace module 34
7D	Master IMB Data Error Module 35	Replace module 35
7E	Master IMB Data Error Module 36	Replace module 36
7F	Master IMB Data Error Module 37	Replace module 37

Table A5: Fault Codes—Block—VLM5 ***(Continued)***

Specific VLM5 Initialisation Fault Codes

CODE(H)	FAULT DESCRIPTION	ACTION
80	CED Checksum Error	Replace CED PROM
81	CED GCSS Compatibility Index Error	"
82	CED VBC Link Error	Check installation address and VBC linking
83	CED VBC Link Parity Error	"
84	CED Data Version Error	Check data version switch settings
85	CED Data Error	Replace CED PROM
86	CED Data Error	"
87	CED Number Of Logic States Error	"
88	CED Module Number Error	"
89	CED Slave Kind Error	"
8A	CED Module Compatibility Index Error	Replace CED PROM
8B	CED Module Compatibility Index Parity Error	"
8C	CED Module Type Error	"
8D	CED Module Compatibility Index Error	"
8E	CED Module Compatibility Index Parity Error	"
8F	CED Module Type Error	"
90	CED Timer Error	"
91	CED Initial Data Error	"
92	CED Global Data Error	"
93	CED Fixed Data Error	"
94	CED Variable Data Error	"
95	CED Node Type Error	"
96	CED Depth Error	"
97	CED Pointer Error	"
98	CED Timer Error	"
99	CED Logic Error	"
9A	CED Global Data Error	"
9B	CED Fixed Data Error	"
9C	CED Variable Data Error	"
9D	CED Logic Error	"
9E	CED Slave Kind Error	"
A0	IMB Data Length Error	Indicates fault on another module

Table A6: Fault Codes—Specific Initialisation—VLM5

CODE(H)	FAULT DESCRIPTION	ACTION
A1	IMB Slave Kind Error	"
A2	IMB Communication Time Error	"
A3	IMB Slave Kind Error IMB Communication Type Error	"
A4	IMB Module Number Error	"
B8	IMB Module Number Error	"
B9	IMB Module Type Error	"
BA	IMB Data Error	"
BB	IMB Module Number Error	"
BC	IMB Module Type Error	"
BD	IMB Message Byte Number Error	"
BE	IMB Message Bit Number Error	"
BF	IMB Output Message Length Error	Indicates fault on another module
C0	IMB Last Pointer Error	"
C1	IMB Number I/O Bits Error	"
C2	IMB Module Number Error	"
C3	IMB Slave Kind Error	"
C4	IMB Timeout Error	"
C5	IMB Scheduler Error	"
C6	Invalid Result	Replace VLM5
C7	CED System Configuration Error	Replace CED PROM
C8	CED Layout Error	"
CF	CED System Configuration Error	"
D0	Invalid Result	"
D6	Progress Error	Replace VLM5
D9	Module Number Error	Replace CED PROM
DA	Module Number Error	"
DB	Last Pointer Error	"
DF	Initial Maximum Time Error	Replace VLM5
E0	Initial Minimum Time Error	"
E1	Initial Sequence Error	"
E5	CED Checksum Error	Replace CED PROM
E6	CED Layout Error	"
E7	Comp Read Data Error	Replace VLM5
E8	Comp Read Pointer Error	"

Table A6: Fault Codes—Specific Initialisation—VLM5 ***(Continued)***

CODE(H)	FAULT DESCRIPTION	ACTION
E9	Comp Write Pointer Error	"
EA	Comp Number Logic States Data Error	"
EB	CED Compatibility Index Error	Replace CED PROM
EC	CED VBC Link Error	Check installation address and VBC linking
ED	CED Parity Error	Replace CED PROM
EE	CED Version Error	Check data version settings
EF	Module Number Error	Replace CED PROM
F0	Number of Timers Error	Replace VLM5
F1	Number of Comp Timers Error	"
F3	Delay 150 ms Error	"
F5	CED Slave Kind Error	Replace CED PROM
F8	CED Module Type Error	Replace CED PROM
F9	CED Module Number Error	"
FA	CED Module Type Error	"
FB	CED Last Module Pointer Error	"
FC	CED Output Message Length Error	"
FD	Invalid System Configuration Data Error	Replace VLM5
FE	Mode State Error	"

Table A6: Fault Codes—Specific Initialisation—VLM5 *(Continued)*

Specific VLM5 Standby Mode Fault Codes

CODE(H)	FAULT DESCRIPTION	ACTION
80	IHCL CED Checksum Error	Replace CED PROM
81	IHCL Installation Address Error	Check installation address and VBC linking
82	IHCL GCSS Version Number Error	Check data version switch settings
83	IHCL CED Checksum Error	Replace CED PROM
84	IHCL Installation Address Error	Check installation address and VBC linking
85	IHCL GCSS Version Number Error	Check data version switch settings
86	IHCL Data Consistency Error	Replace CED PROM
87	IHCL Data Consistency Error	"
88	CED Number of Logic States Error	"
89	CED Initial State Error	"
8A	CED Initial State Error	"

Table A7: Fault Codes—Specific Standby Mode—VLM5

CODE(H)	FAULT DESCRIPTION	ACTION
8B	Sync Period Expired With No IHCL Message Error	Replace VLM5
8C	Too Many Invalid IHCL Messages Received Error	"
8D	Invalid IHCL Message Error	"
8E	Compatibility Index Error	"
8F	Timer Checksum Error	"
90	Invalid IHCL Message Error	"
91	Compatibility Index Error	"
92	Timer Checksum Error	"
93	CED Number of Logic States Error	Replace CED PROM
94	SCC Hardware Error	Replace VLM5
95	SCC Hardware Error	Replace VLM5
96	SCC Hardware Error	"
97	SCC Hardware Error	"
98	Invalid Data Error	"
99	Invalid Data Error	"
9E	OPCR State Error	"
9F	OPCR State Error	"
A0	IMB Data Length Error	Indicates fault on another module
A1	IMB Slave Kind Error	"
A2	IMB Communication Time Error	"
A3	IMB Slave Kind Error IMB Communication Type Error	"
A4	IMB Module Number Error	"
A5	IMB Parity Error	"
A6	IMB Module Number Error	"
A7	IMB Module Type Error	"
A8	IMB Port Address Range Error	"
A9	IMB Parity Error	"
AA	IMB Module Number Error	"
AB	IMB Module Type Error	"
AC	IMB Message Byte Number Error	"
AD	IMB Message Bit Number Error	"
AE	IMB Input Message Length Error	"
AF	IMB Last Pointer Error	"

Table A7: Fault Codes—Specific Standby Mode—VLM5 *(Continued)*

CODE(H)	FAULT DESCRIPTION	ACTION
D2	Logic Sequence Error	Replace VLM5
D3	Logic Sequence Error	"
D4	Logic Sequence Error	"
D5	Logic Sequence Error	"
E2	Maximum Time Error	"
E3	Minimum Time Error	"
E4	Sequence Error	"
E6	CED Checksum Error	Replace CED PROM
E7	Logic Sequence Error	Replace VLM5
E8	Logic Sequence Error	"
F0	Number of Timers Error	"
F1	Number of Comp Timers Error	Replace VLM5
F2	Cycle Time > 1.3 sec Error	Too much logic and too many modules. Check installation design
F3	Delay 150 ms Error	Replace VLM5
F8	CED Module Type Error	Replace CED PROM
F9	CED Module Number Error	"
FA	CED Module Type Error	"
FB	CED Last Module Pointer Error	"
FC	CED Output Message Length Error	"
FE	Mode State Error	Replace VLM5
FF	PIT Access Error	"

Table A7: Fault Codes—Specific Standby Mode—VLM5 *(Continued)*

Specific VLM5 On-Line Mode Fault Codes

CODE(H)	FAULT DESCRIPTION	ACTION
9A	CED Number of Logic States Error	Replace CED PROM
9B	CED Number of Timers Error	"
9C	Invalid Timer Calculation Error	Replace VLM5
9D	Invalid Timer Count Error	"
9E	OPCR State Error	"
9F	OPCR State Error	"
A0	IMB Data Length Error	Indicates fault on another module
A1	IMB Slave Kind Error	"

Table A8: Fault Codes—Specific On-line—VLM5

CODE(H)	FAULT DESCRIPTION	ACTION
A2	IMB Communication Time Error	"
A3	IMB Slave Kind Error IMB Communications Type Error	"
A4	IMB Module Number Error	"
A5	IMB Parity Error	"
A6	IMB Module Number Error	"
A7	IMB Module Type Error	"
A8	IMB Port Address Range Error	"
A9	IMB Parity Error	"
AA	IMB Module Number Error	"
AB	IMB Module Type Error	"
AC	IMB Message Byte Number Error	Indicates fault on another module
AD	IMB Message Bit Number Error	"
AE	IMB Input Message Length Error	"
AF	IMB Last Pointer Error	"
B0	IMB Module Number Error	"
B1	IMB Module Type Error	"
B2	IMB Module Number Error	"
B3	IMB Module Type Error	"
B4	IMB Message Byte Number Error	"
B5	IMB Message Bit Number Error	"
B6	IMB Output Message Length Error	"
B7	IMB Last Pointer Error	"
B8	IMB Module Number Error	"
B9	IMB Module Type Error	"
BA	IMB Data Error	"
BB	IMB Module Number Error	"
BC	IMB Module Type Error	"
BD	IMB Message Byte Number Error	"
BE	IMB Message Bit Number Error	"
BF	IMB Output Message Length Error	"
C0	IMB Last Pointer Error	"
C1	IMB Number I/O Bits Error	"
C2	IMB Module Number Error	"
C3	IMB Slave Kind Error	"

Table A8: Fault Codes—Specific On-line—VLM5 ***(Continued)***

CODE(H)	FAULT DESCRIPTION	ACTION
C4	IMB Timeout Error	"
C5	IMB Scheduler Error	"
C6	Invalid Timer Calculation Error	Replace VLM5
C7	Invalid Timer Count Error	"
C8	Invalid Timer Error	"
C9	Timer Difference Error	"
CA	Timer Expiry Difference Error	"
CB	Invalid Timer Error	"
CC	Timer Difference Error	"
CD	Timer Expiry Difference Error	"
CE	Timer Data Error	Replace VLM5
D1	Invalid Data Error	"
D2	Logic Sequence Error	"
D3	Depth Check Error	"
D4	Logic Sequence Error	"
D5	Depth Check Error	"
D6	Progress Error	"
D7	Invalid Data Error	"
D8	Invalid Data Error	"
DC	OPCR Initialise Error	Check supply to OPC. Power off system and restart after 40 seconds. Replace OPC or OPC PFM when fault persists.
DD	NOPCR Error	Replace VLM5
DE	NOPCR Error	"
E2	Maximum Time Error	"
E3	Minimum Time Error	"
E4	Sequence Error	"
E6	CED Checksum Error	Replace CED PROM
E7	Comp Read Data Error	Replace VLM5
E8	Comp Read Pointer Error	"
E9	Comp Write Pointer Error	"
EA	Comp Number Logic States Data Error	"
EF	CED Module Number Error	Replace CED PROM
F0	Number Of Timers Error	"
F1	Number Of Comp Timers Error	"

Table A8: Fault Codes—Specific On-line—VLM5 ***(Continued)***

CODE(H)	FAULT DESCRIPTION	ACTION
F2	Cycle Time > 1.3 sec Error	Too much logic and too many modules. Check installation design
F3	Delay 150 ms Error	Replace VLM5
F4	APPDEL Value Error	"
FE	Mode State Error	"

Table A8: Fault Codes—Specific On-line—VLM5 ***(Continued)***

A.2.3.2 VLM5 Output Power Card (OPC) Configuration

None

A.2.3.3 VLM5 Hot Standby Vital Backplane Card (HVBC) Configuration

None.

A.2.4 VLM5 External Connections

All external connections to the VLM5 are made via the HOPC PFM which plugs directly into the HVBC.

The HOPC PFM External Connector is a 19 way plug and socket Klippon type BLA/SLA.

Figure A.8 depicts the external connection details of the HOPC PFM.

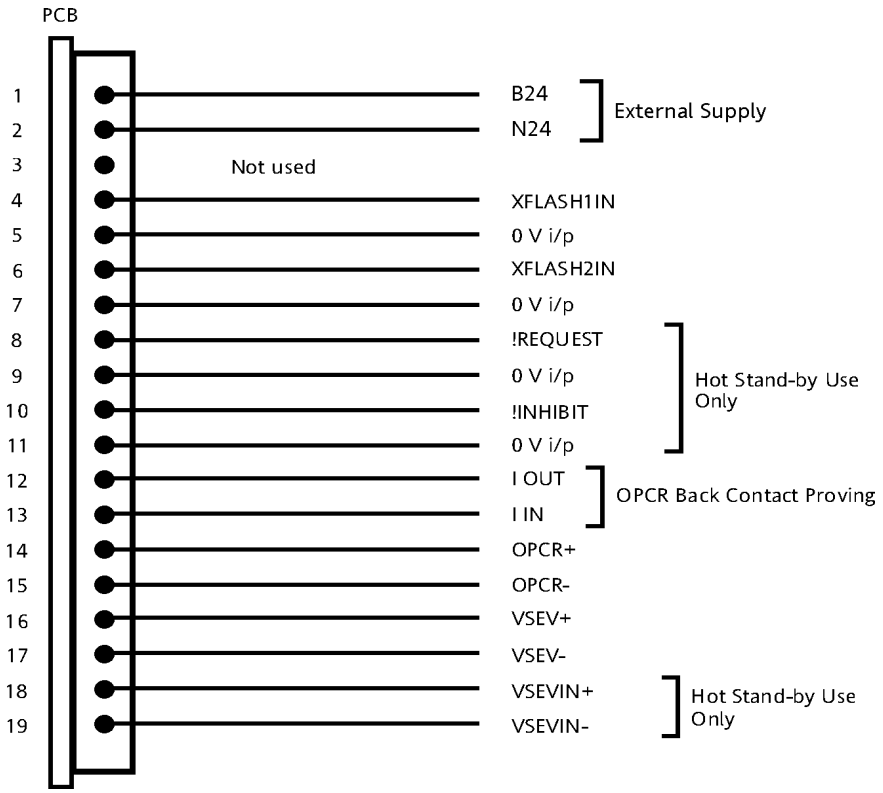

Figure A.8: External Connections—HOPC PFM—VLM5

The maximum continuous current that passes in each of the connections is:

24 V supply	4 A
OPCR Drive	0.8 A
VSEV	1 A
OPCR Back Contact	20 mA

A.3 Hot Standby Vital Logic Module (HVLM128)

All WESTRACE systems have a Vital Logic Module as its processing core. The HVLM128 is one the Vital Logic Module types in service. This section covers the HVLM128 variant of the module although there are other variants.

A WESTRACE Hot Standby system comprises a pair of fully duplicated installations in a symmetrical arrangement, such that one installation is in ‘on-line’ mode (in control of the railway), whilst the other is in ‘standby’ mode. Each installation has an HVLM at the processing core and the service provided by a particular installation is determined by setting links on a backplane card.

A.3.1 Description

The HVLM comprises two (2) printed circuit boards:

- HVLC (Hot Standby Vital Logic Card);
- OPC (Output Power Card).

The individual boards are interconnected by means of the VLE backplane, and also by a Hot Standby Vital Backplane Card (HVBC). Links on this card (CONF1 and CONF2) determine the service provided by the particular WESTRACE installation.

An HVLM occupies slots 2 to 3 in housing 1 of a WESTRACE installation. The OPC is in Slot 2 and the HVLC is in Slot 3. *Slot 1 in housing 1 must have a Blanker card inserted*.

A.3.1.1 Hot Standby Vital Logic Card (HVLC)

The HVLC is the system's central processing module. It controls communications between the system modules and performs all Application Logic processing to determine the current state of all vital and non-vital outputs.

The HVLC contains in PROMs the Configuration Element Data (CED) generated by the GCSS. The card has data version configuration switches (SW1) that it uses to confirm the CED in PROM is the correct version.

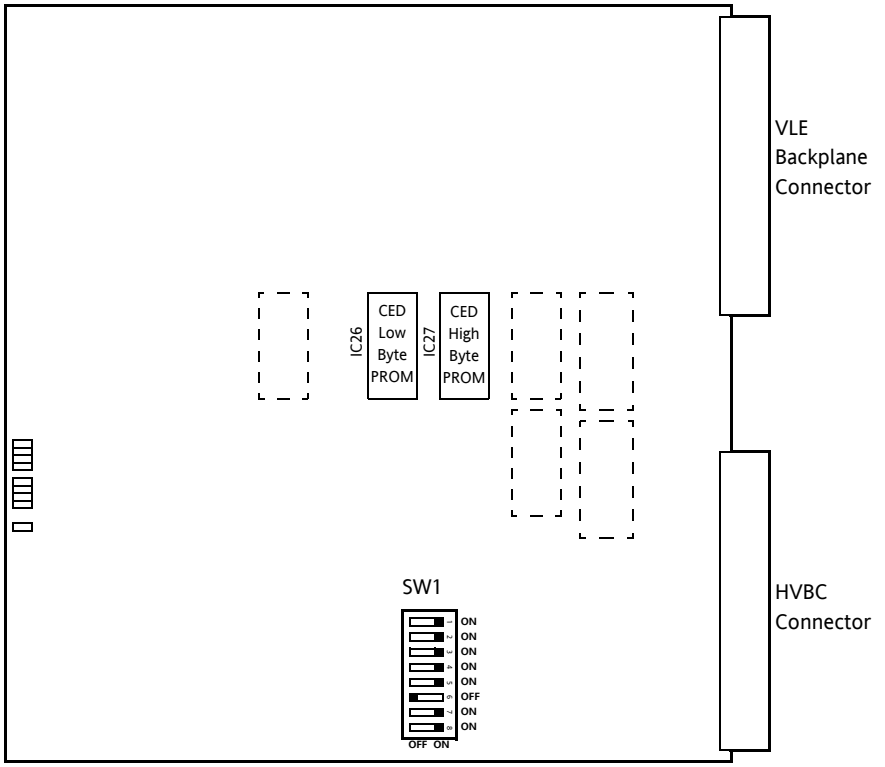

Figure A.9: Layout—HVLC—HVLM

A.3.1.2 Output Power Card (OPC)

The OPC produces power to drive the OPCR and VSEV. The VSEV enables outputs for the vital communications modules and the OPC isolates power from both of these outputs when safe operation of the system cannot be guaranteed.

A.3.1.3 Hot Standby Vital Backplane Card (HVBC)

Note: ***A UHVBC can also be used provided LK25 and LK26 are not closed. See sections A.1.1.3 and A.1.2.3 for details.***

The HVBC is a small, half height, printed circuit board installed directly behind the lower connectors of the HVLM.

It provides:

- a direct connection between the OPC and HVLC cards, that constitute the HVLM;
- 24 links (LK1 to LK24) that determine the unique physical address of the WESTRACE installation. The setting of these links is checked against the data contained in the Application Data PROMS, thereby preventing installation and execution of an incorrect version of application data;
- 2 links (CONF1 andCONF2, see figures A.10 and A.11, and table A9) that determine the operation of the HVLM. The setting of these links determines whether the HVLM is operating in Stand-alone or Hot

Standby mode. If it is in Hot Standby Mode they are also determine whether it is the default On Line or Standby system.

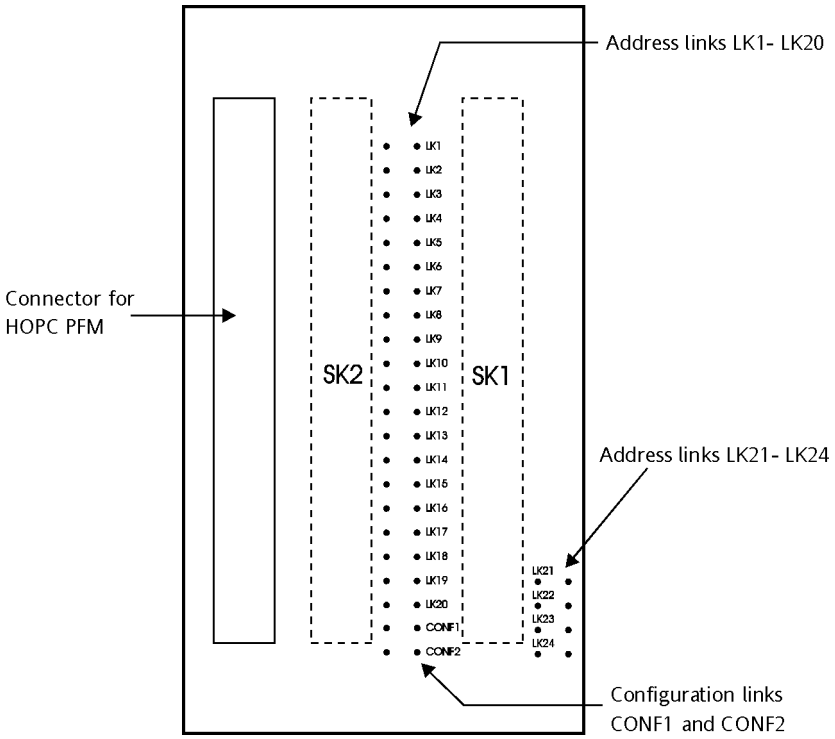

Figure A.10: Rear Side View—HVBC—HVLM

Note: ***CONF1 and CONF2 in figure A.10 correspond to J25 and J26 on the GCSS Installation Report (figure A.11).***

A.3.2 Configuration

A.3.2.1 Hot Standby Vital Logic Card (HVLC)

The CED is contained in two PROMs, high byte and low byte (see figure A.9). The low byte PROM is in socket IC26 and the high byte PROM is in socket IC27.

The settings for switch SW1 are provided on the Installation Report generated by GCSS from the Application Data. Figure A.11 shows an example for Installation Reports generated in GCSS 6 and GCSS 7.

Installation Assembly Details

Address Jumpers

J01	o o	J14	o---o
J02	o o	J15	o o
J03	o---o	J16	o o
J04	o o	J17	o---o
J05	o---o	J18	o---o
J06	o o	J19	o o
J07	o---o	J20	o---o
J08	o---o	J21	o---o
J09	o o	J22	o o
J10	o---o	J23	o---o
J11	o---o	J24	o---o
J12	o---o	J25	See Application Document
J13	o o	J26	o---o

Data Version Switches

1	ON
2	ON
3	ON
4	ON
5	ON
6	OFF
7	ON
8	ON

Filename: EPA1.INS Version 04.0000 Status: Approved 13:56:1 Fri, Sep 18, 1998

GCSS 6 Installation Report

Set LK1–LK24 on card as shown
by J01–J24 on report
J25 = CONF1
J26 = CONF2
CONF2

SW1

1	ON
2	ON
3	ON
4	ON
5	ON
6	OFF
7	ON
8	ON

OFF ON

GCSS 7 Installation Report

Installation Assembly Details

Address and Configuration Link Jumpers

P1	o o	LK1	P15	o o	LK15
P2	o o	LK2	P16	o---o	LK16
P3	o o	LK3	P17	o---o	LK17
P4	o o	LK4	P18	o---o	LK18
P5	o---o	LK5	P19	o o	LK19
P6	o---o	LK6	P20	o---o	LK20
P7	o o	LK7	P21	o---o	LK21
P8	o o	LK8	P22	o o	LK22
P9	o---o	LK9	P23	o---o	LK23
P10	o---o	LK10	P24	o---o	LK24
P11	o---o	LK11	P25	o ? o	CONF1 *
P12	o---o	LK12	P26	o---o	CONF2
P13	o o	LK13	P27	o o	UHVBC LK25
P14	o---o	LK14	P28	o o	UHVBC LK26

Data Version Switches

1	ON
2	ON
3	ON
4	ON
5	OFF
6	ON
7	ON
8	ON

* Open For Biased OFFLINE, Closed For Biased ONLINE

Filename: EJ1A.INS
Version 08.0001 Status: Not Approved 14:49:07, Thu, Jul 07, 2005 Page 1 of 1

Figure A.11: Typical GCSS Installation Reports and SW1 Settings—HVLM128

A.3.2.2 Output Power Card (OPC)

None

A.3.2.3 Hot Standby Vital Backplane Card (HVBC)

The links LK1 to LK24 must be set to the physical address of the system shown by J01 to J24 on the GCSS Installation Report. See figure A.11.

Links CONF1 and CONF2 must be set to the intended operation of the system (hot standby or stand-alone) as defined in the application data for the WESTRACE. See table A9.

Note: ***On the GCSS 6 Installation Report, CONF1 and CONF2 correspond to J25 and J26 respectively.***

Link	Closed	Not Closed
CONF1	Biased to On-line	Biased to Off-line
CONF2	Stand-alone	Hot Standby

Table A9: CONF1, CONF2—Link Settings

A.3.3 Indications

A.3.3.1 Hot Standby Vital Logic Card (HVLC)

A.3.3.1.1 Start Up Indications

Diagnostic LEDs display the module type code, shortly followed by a firmware version code (reflecting the firmware version installed in the module). Firmware version is displayed for approximately 8 seconds, after which all diagnostic LEDs extinguish.

A.3.3.1.2 Operation Indications

The module commences flashing the green watchdog LED to indicate the module is operational and working correctly.

The module flashes the yellow On-Line LED to indicate when it starts executing application logic.

A.3.3.1.3 Fault Codes

The HVLM fault codes written to the Fault Diagnostic Latch have the following meaning during normal operation. Some fault codes have different meanings during power-on initialisation and these have been explicitly declared.

The term ‘Initialisation’ refers to HVLM Initialisation. Some HVLM fault codes are used only in the HLVM Standby Mode, and some, only in the HVLM On-line Mode. These codes have been explicitly declared.

Module Sequence Numbers

In order for the module sequence numbers in the GCSS housing printout to match the module sequence numbers in the HVLM fault codes it is necessary for the GCSS user to assign the highest sequence number to the NVC/DM.

Block Fault Codes

CODE(H)	FAULT DESCRIPTION	ACTION
01	Second Negation Error	Indicates fault on other modules
03	PROM Checksum Error	Replace HVLM
04	Stack Guard Error	"
05	RAM Error	Replace HVLM
06	Interrupt Errors	"
07	Termination Error	"
08	Processor Error	"
09	Stack Error	"
0A	Run Time Error A	"
0B	Run Time Error B	"
0C	Run Time Error C	"
0D	Run Time Error D	"
0E	Run Time Error E	"
0F	Run Time Error F	"
10	Run Time Error G	"
11	Run Time Error H	"
12	Run Time Error I	"
13	Run Time Error J	"
14	Run Time Error K	"
15	Run Time Error L	"
16	Run Time Error M	"
17	Run Time Error N	"
18	Run Time Error O	"
19	Run Time Error P	"
1A	Run Time Error Q	"
1B	Run Time Error R	"
1C	Run Time Error S	"
1D	Run Time Error T	"

Table A10: Fault Codes—Block—HVLM

CODE(H)	FAULT DESCRIPTION	ACTION
1E	Run Time Error U	"
1F	Run Time Error V	"
20	Run Time Error W	"
21	Run Time Error X	"
22	Run Time Error Y	"
23	Run Time Error Z	"
2D	Health Monitoring Time Error	Indicates fault on other modules
2E	Health Monitoring Health Error	"
2F	Health Monitoring Scheduling Error	Replace HVLM
31	Master IMB Startup Timeout	Replace HVLM
32	Too Few IMB Calls	"
33	Master IMB Interface Error Too Many IMB Calls	"
2D	Health Monitoring Time Error	Indicates fault on other modules
2E	Health Monitoring Health Error	"
2F	Health Monitoring Scheduling Error	Replace HVLM
31	Master IMB Startup Timeout	"
32	Too Few IMB Calls	"
33	Master IMB Interface Error Too Many IMB Calls	"
34	Error code with system shutdown is the result of the invalid number of selftest calls error, 'STIMBTooFewSTCalls'. Error code *without system shutdown* indicates IMB timeout of the non-vital diagnostic module. IMB Database Error	Replace HVLM if shutdown occurred. Replace diagnostic module if shutdown did not occur.
35	Master IMB Timeout Module 01	Check other modules to identify one that caused VLM shutdown—ie reported a failure other than IMB timeout. Replace the identified module.
36	Master IMB Timeout Module 02	"
37	Master IMB Timeout Module 03	"
38	Master IMB Timeout Module 04	"
39	Master IMB Timeout Module 05	"
3A	Master IMB Timeout Module 06	"
3B	Master IMB Timeout Module 07	"
3C	Master IMB Timeout Module 08	"
3D	Master IMB Timeout Module 09	"
3E	Master IMB Timeout Module 10	"

Table A10: Fault Codes—Block—HVLM ***(Continued)***

CODE(H)	FAULT DESCRIPTION	ACTION
3F	Master IMB Timeout Module 11	"
40	Master IMB Timeout Module 12	"
41	Master IMB Timeout Module 13	"
42	Master IMB Timeout Module 14	"
43	Master IMB Timeout Module 15	"
44	Master IMB Timeout Module 16	"
45	Master IMB Timeout Module 17	"
46	Master IMB Timeout Module 18	"
47	Master IMB Timeout Module 19	"
48	Master IMB Timeout Module 20	"
49	Master IMB Timeout Module 21	"
4A	Master IMB Timeout Module 22	"
4B	Master IMB Timeout Module 23	"
4C	Master IMB Timeout Module 24	"
4D	Master IMB Timeout Module 25	"
4E	Master IMB Timeout Module 26	"
4F	Master IMB Timeout Module 27	"
50	Master IMB Timeout Module 28	"
51	Master IMB Timeout Module 29	"
52	Master IMB Timeout Module 30	"
53	Master IMB Timeout Module 31	"
54	Master IMB Timeout Module 32	"
55	Master IMB Timeout Module 33	"
56	Master IMB Timeout Module 34	"
57	Master IMB Timeout Module 35	"
58	Master IMB Timeout Module 36	"
59	Master IMB Timeout Module 37	"
5A	Master IMB Data Error Module DM	Replace diagnostic module
5B	Master IMB Data Error Module 01	Replace module 01
5C	Master IMB Data Error Module 02	Replace module 02
5D	Master IMB Data Error Module 03	Replace module 03
5E	Master IMB Data Error Module 04	Replace module 04
5F	Master IMB Data Error Module 05	Replace module 05
60	Master IMB Data Error Module 06	Replace module 06

Table A10: Fault Codes—Block—HVLM *(Continued)*

CODE(H)	FAULT DESCRIPTION	ACTION
61	Master IMB Data Error Module 07	Replace module 07
62	Master IMB Data Error Module 08	Replace module 08
63	Master IMB Data Error Module 09	Replace module 09
64	Master IMB Data Error Module 10	Replace module 10
65	Master IMB Data Error Module 11	Replace module 11
66	Master IMB Data Error Module 12	Replace module 12
67	Master IMB Data Error Module 13	Replace module 13
68	Master IMB Data Error Module 14	Replace module 14
69	Master IMB Data Error Module 15	Replace module 15
6A	Master IMB Data Error Module 16	Replace module 16
6B	Master IMB Data Error Module 17	Replace module 17
6C	Master IMB Data Error Module 18	Replace module 18
6D	Master IMB Data Error Module 19	Replace module 19
6E	Master IMB Data Error Module 20	Replace module 20
6F	Master IMB Data Error Module 21	Replace module 21
70	Master IMB Data Error Module 22	Replace module 22
71	Master IMB Data Error Module 23	Replace module 23
72	Master IMB Data Error Module 24	Replace module 24
73	Master IMB Data Error Module 25	Replace module 25
74	Master IMB Data Error Module 26	Replace module 26
75	Master IMB Data Error Module 27	Replace module 27
76	Master IMB Data Error Module 28	Replace module 28
77	Master IMB Data Error Module 29	Replace module 29
78	Master IMB Data Error Module 30	Replace module 30
79	Master IMB Data Error Module 31	Replace module 31
7A	Master IMB Data Error Module 32	Replace module 32
7B	Master IMB Data Error Module 33	Replace module 33
7C	Master IMB Data Error Module 34	Replace module 34
7D	Master IMB Data Error Module 35	Replace module 35
7E	Master IMB Data Error Module 36	Replace module 36
7F	Master IMB Data Error Module 37	Replace module 37

Table A10: Fault Codes—Block—HVLM *(Continued)*

Specific HVLM Initialisation Fault Codes

CODE(H)	FAULT DESCRIPTION	ACTION
80	CED Checksum Error	Replace CED PROM
81	CED GCSS Compatibility Index Error	"
82	CED VBC Link Error	Check installation address and VBC linking
83	CED VBC Link Parity Error	Check installation address and VBC linking
84	CED Data Version Error	Check data version switch settings
85	CED Data Error	Replace CED PROM
86	CED Data Error	"
87	CED Number Of Logic States Error	Replace CED PROM
88	CED Module Number Error	"
89	CED Slave Kind Error	"
8A	CED Module Compatibility Index Error	"
8B	CED Module Compatibility Index Parity Error	"
8C	CED Module Type Error	"
8D	CED Module Compatibility Index Error	"
8E	CED Module Compatibility Index Parity Error	"
8F	CED Module Type Error	"
90	CED Timer Error	"
91	CED Initial Data Error	"
92	CED Global Data Error	"
93	CED Fixed Data Error	"
94	CED Variable Data Error	"
95	CED Node Type Error	"
96	CED Depth Error	"
97	CED Pointer Error	"
98	CED Timer Error	"
99	CED Logic Error	"
9A	CED Global Data Error	"
9B	CED Fixed Data Error	"
9C	CED Variable Data Error	"
9D	CED Logic Error	"
9E	CED Slave Kind Error	"
A0	IMB Data Length Error	Indicates fault on another module

Table A11: Fault Codes—Specific Initialisation—HVLM

CODE(H)	FAULT DESCRIPTION	ACTION
A1	IMB Slave Kind Error	"
A2	IMB Communication Time Error	"
A3	IMB Slave Kind Error IMB Communication Type Error	"
A4	IMB Module Number Error	"
B8	IMB Module Number Error	Indicates fault on another module
B9	IMB Module Type Error	"
BA	IMB Data Error	"
BB	IMB Module Number Error	"
BC	IMB Module Type Error	Indicates fault on another module
BD	IMB Message Byte Number Error	"
BE	IMB Message Bit Number Error	"
BF	IMB Output Message Length Error	"
C0	IMB Last Pointer Error	"
C1	IMB Number I/O Bits Error	"
C2	IMB Module Number Error	"
C3	IMB Slave Kind Error	"
C4	IMB Timeout Error	"
C5	IMB Scheduler Error	"
C6	CED Invalid Data Error	Replace CED PROM
C7	CED System Configuration Error	"
CF	CED System Configuration Error	"
D0	Invalid Result	"
D6	Progress Error	Replace HVLM
D9	Module Number Error	
DA	Module Number Error	
DB	Last Pointer Error	
DF	Initial Maximum Time Error	Replace HVLM
E0	Initial Minimum Time Error	"
E1	Initial Sequence Error	"
E5	CED Checksum Error	Replace CED PROM
E7	Comp Read Data Error	Replace HVLM
E8	Comp Read Pointer Error	"
E9	Comp Write Pointer Error	"
EA	Comp Number Logic States Data Error	"

Table A11: Fault Codes—Specific Initialisation—HVLM *(Continued)*

CODE(H)	FAULT DESCRIPTION	ACTION
EB	CED Compatibility Index Error	Replace CED PROM
EC	CED VBC Link Error	Check installation address and VBC linking
ED	CED Parity Error	Replace CED PROM
EE	CED Version Error	Check data version settings
EF	Module Number Error	
F0	Number of Timers Error	Replace HVLM
F1	Number of Comp Timers Error	"
F3	Delay 150 ms Error	"
F5	CED Slave Kind Error Initial Progress Error	Replace CED PROM Replace HVLM
F8	CED Module Type Error	Replace CED PROM
F9	CED Module Number Error	"
FA	CED Module Type Error	"
FB	CED Last Module Pointer Error	"
FC	CED Output Message Length Error	"
FD	Invalid System Configuration Data Error	Replace HVLM
FE	Mode State Error	"

Table A11: Fault Codes—Specific Initialisation—HVLM ***(Continued)***

Specific HVLM Standby Mode Fault Codes

CODE(H)	FAULT DESCRIPTION	ACTION
80	IHCL CED Checksum Error	Replace CED PROM
81	IHCL Installation Address Error	Check installation address and VBC linking
82	IHCL GCSS Version Number Error	Check data version switch settings
83	IHCL CED Checksum Error	Replace CED PROM
84	IHCL Installation Address Error	Check installation address and VBC linking
85	IHCL GCSS Version Number Error	Check data version switch settings
86	IHCL Data Consistency Error	Replace CED PROM
87	IHCL Data Consistency Error	"
88	CED Number of Logic States Error	"
89	CED Initial State Error	"
8A	CED Initial State Error	"
8B	Sync Period Expired With No IHCL Message Error	Replace HVLM

Table A12: Fault Code—Specific Standby Mode—HVLM

CODE(H)	FAULT DESCRIPTION	ACTION
8C	Too Many Invalid IHCL Messages Received Error	"
8D	Invalid IHCL Message Error	"
8E	Compatibility Index Error	"
8F	Timer Checksum Error	"
90	Invalid IHCL Message Error	Replace HVLM
91	Compatibility Index Error	"
92	Timer Checksum Error	"
93	CED Number of Logic States Error	Replace CED PROM
94	SCC Hardware Error	Replace HVLM
95	SCC Hardware Error	"
96	SCC Hardware Error	"
97	SCC Hardware Error	"
98	Invalid Data Error	"
99	Invalid Data Error	"
9E	OPCR State Error	"
9F	OPCR State Error	"
A0	IMB Data Length Error	Indicates fault on another module
A1	IMB Slave Kind Error	"
A2	IMB Communication Time Error	"
A3	IMB Slave Kind Error IMB Communication Type Error	"
A4	IMB Module Number Error	"
A5	IMB Parity Error	"
A6	IMB Module Number Error	"
A7	IMB Module Type Error	"
A8	IMB Port Address Range Error	"
A9	IMB Parity Error	"
AA	IMB Module Number Error	"
AB	IMB Module Type Error	"
AC	IMB Message Byte Number Error	"
AD	IMB Message Bit Number Error	"
AE	IMB Input Message Length Error	"
AF	IMB Last Pointer Error	"
D2	Logic Sequence Error	Replace HVLM

Table A12: Fault Code—Specific Standby Mode—HVLM *(Continued)*

CODE(H)	FAULT DESCRIPTION	ACTION
D3	Logic Sequence Error	"
D4	Logic Sequence Error	"
D5	Depth Check Error	"
E2	Maximum Time Error	"
E3	Minimum Time Error	"
E4	Sequence Error	Replace HVLM
E6	CED Checksum Error	Replace CED PROM
E7	Logic Sequence Error	Replace HVLM
E8	Logic Sequence Error	"
F0	Number of Timers Error	Replace HVLM
F1	Number of Comp Timers Error	"
F2	Cycle Time > 1 sec Error	Too much logic and too many modules—check installation design
F3	Delay 150 ms Error	Replace HVLM
F8	CED Module Type Error	Replace CED PROM
F9	CED Module Number Error	"
FA	CED Module Type Error	"
FB	CED Last Module Pointer Error	"
FC	CED Output Message Length Error	"
FE	Mode State Error	Replace HVLM
FF	PIT Access Error	"

Table A12: Fault Code—Specific Standby Mode—HVLM *(Continued)*

Specific HVLM On-Line Mode Fault Codes

CODE(H)	FAULT DESCRIPTION	ACTION
9A	CED Number of Logic States Error	Replace CED PROM
9B	CED Number of Timers Error	"
9C	Invalid Timer Calculation Error	Replace HVLM
9D	Invalid Timer Count Error	"
9E	OPCR State Error	"
9F	OPCR State Error	"
A0	IMB Data Length Error	Indicates fault on another module
A1	IMB Slave Kind Error	"
A2	IMB Communication Time Error	"

Table A13: Fault Codes—Specific On-line Mode—HVLM

CODE(H)	FAULT DESCRIPTION	ACTION
A3	IMB Slave Kind Error IMB Communications Type Error	"
A4	IMB Module Number Error	"
A5	IMB Parity Error	"
A6	IMB Module Number Error	"
A7	IMB Module Type Error	Indicates fault on another module
A8	IMB Port Address Range Error	"
A9	IMB Parity Error	"
AA	IMB Module Number Error	"
AB	IMB Module Type Error	Indicates fault on another module
AC	IMB Message Byte Number Error	"
AD	IMB Message Bit Number Error	"
AE	IMB Input Message Length Error	"
AF	IMB Last Pointer Error	"
B0	IMB Module Number Error	"
B1	IMB Module Type Error	"
B2	IMB Module Number Error	"
B3	IMB Module Type Error	"
B4	IMB Message Byte Number Error	"
B5	IMB Message Bit Number Error	"
B6	IMB Input Message Length Error	"
B7	IMB Last Pointer Error	"
B8	IMB Module Number Error	"
B9	IMB Module Type Error	"
BA	IMB Data Error	"
BB	IMB Module Number Error	"
BC	IMB Module Type Error	"
BD	IMB Message Byte Number Error	"
BE	IMB Message Bit Number Error	"
BF	IMB Output Message Length Error	"
C0	IMB Last Pointer Error	"
C1	IMB Number I/O Bits Error	"
C2	IMB Module Number Error	"
C3	IMB Slave Kind Error	"
C4	IMB Timeout Error	"

Table A13: Fault Codes—Specific On-line Mode—HVLM *(Continued)*

CODE(H)	FAULT DESCRIPTION	ACTION
C5	IMB Scheduler Error	"
C6	Invalid Timer Calculation Error	Replace HVLM
C7	Invalid Timer Count Error	"
C8	Invalid Timer Error	"
C9	Timer Difference Error	Replace HVLM
CA	Timer Expiry Difference Error	"
CB	Invalid Timer Error	"
CC	Timer Difference Error	"
CD	Timer Expiry Difference Error	Replace HVLM
CE	Timer Data Error	"
D1	Invalid Data Error	"
D2	Logic Sequence Error	"
D3	Depth Check Error	"
D4	Logic Sequence Error	"
D5	Depth Check Error	"
D6	CED Invalid Data Error Progress Error	Replace CED PROM Replace HVLM
D8	Invalid Data Error	Replace HVLM
DC	OPCR Initialise Error	Check supply to OPC. Power off system and restart after 40 seconds. If fault persists replace OPC or OPC PFM
DD	NOPCR Error	Replace HVLM
DF	NOPCR Error	"
E2	Maximum Time Error	"
E3	Minimum Time Error	"
E4	Sequence Error	"
E6	CED Checksum Error	Replace CED PROM
E7	Comp Read Data Error	Replace HVLM
E8	Comp Read Pointer Error	"
E9	Comp Write Pointer Error	"
EA	Comp Number Logic States Data Error	"
EF	CED Module Number Error	Replace CED PROM
F0	Number Of Timers Error	"
F1	Number Of Comp Timers Error	"
F2	Cycle Time > 1 sec Error	Too much logic and too many modules—check installation design

Table A13: Fault Codes—Specific On-line Mode—HVLM *(Continued)*

CODE(H)	FAULT DESCRIPTION	ACTION
F3	Delay 150 ms Error	Replace HVLM
F4	APPDEL Value Error	"
F6	APPDEL Progress Error	"
F7	Normal Progress Error	"
FE	Mode State Error	Replace HVLM

Table A13: Fault Codes—Specific On-line Mode—HVLM ***(Continued)***

A.3.3.2 Output Power Card (OPC)

None

A.3.3.3 Hot Standby Vital Backplane Card (HVBC)

None.

A.3.4 External Connections

All external connections to the HVLM are made via the HOPC PFM which plugs directly into the HVBC.

The HOPC PFM External Connector is a 19 way plug and socket Klippon type BLA/SLA.

Figure A.12 depicts the external connection details of the HOPC PFM.

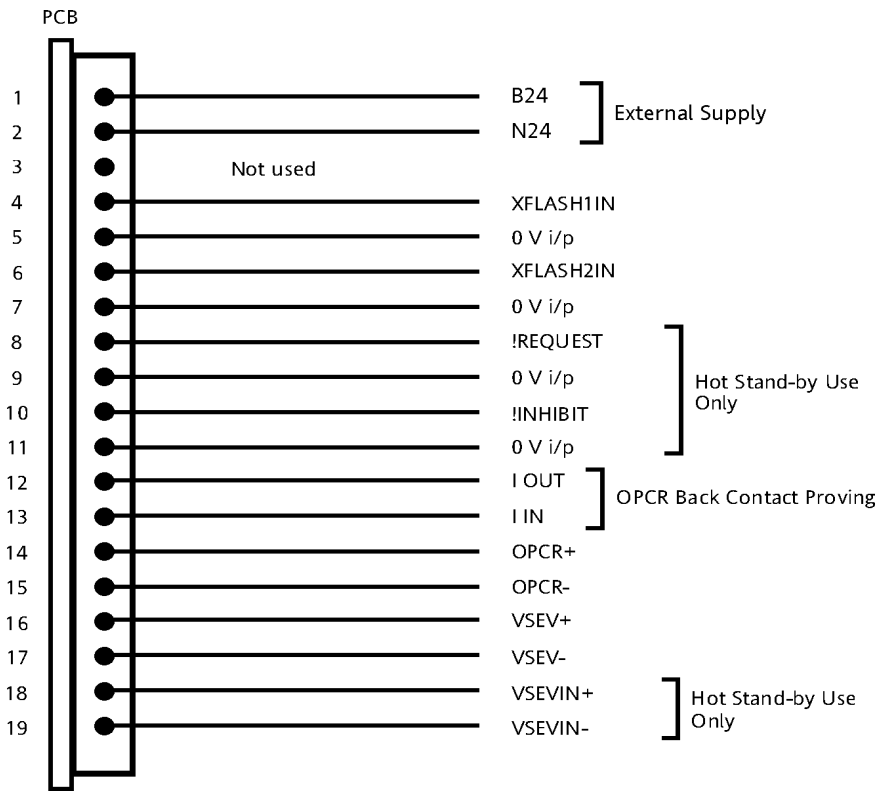

Figure A.12: External Connections—HOPC PFM—HVLM

The maximum continuous current that passes in each of the connections is:

24 V supply	4 A
OPCR Drive	0.8 A
VSEV	1 A
OPCR Back Contact	20 mA

A.4 Vital Logic Module (VLM1)

All WESTRACE systems have a Vital Logic Module as its processing core. The VLM1 is one the Vital Logic Module types in service.

A.4.1 Description

The VLM1 comprises three (3) printed circuit boards:

- VLC (Vital Logic Card);
- CEC (Configuration Element Card);
- OPC (Output Power Card).

These boards are interconnected by means of the VLE backplane, and also by a Vital Backplane Card (VBC).

A VLM1 occupies slots 1 to 3 in housing 1 of a WESTRACE system. The OPC is in Slot 1, the CEC is in Slot 2 and the VLC is in Slot 3.

A.4.1.1 Vital Logic Card (VLC)

The VLC is the system's central processing module. It controls communications between the system modules and performs all Application Logic processing to determine the current state of all vital and non-vital outputs.

A.4.1.2 Configuration Element Card (CEC)

The CEC contains in PROMs the Application Data generated by the CS. It has configuration version switches (SW1) which the VLC uses to ensure Configuration Application Data in PROM is the correct version.

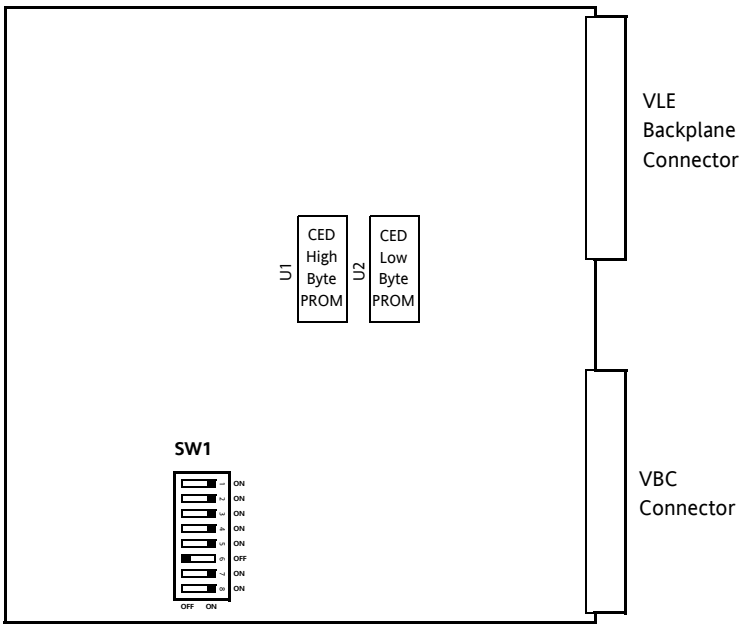

Figure A.13: Layout—CEC—VLM1

A.4.1.3 Output Power Card (OPC)

The OPC produces power to drive the OPCR and VSEV. The VSEV enables outputs for the vital communications modules and the OPC isolates power from both of these outputs when safe operation of the system cannot be guaranteed.

A.4.1.4 Vital Backplane Card (VBC)

The VBC is a small, half height printed circuit board installed directly behind the lower connectors of the VLM1.

The VBC provides:

- a direct connection between the OPC, CEC and VLC cards, which constitute the VLM1;
- 24 links (LK1 to LK24) which determine the unique physical address of the WESTRACE installation. The setting of these links is checked against the data contained in the Application Data PROMS, thereby preventing installation and execution of the wrong Application Data.

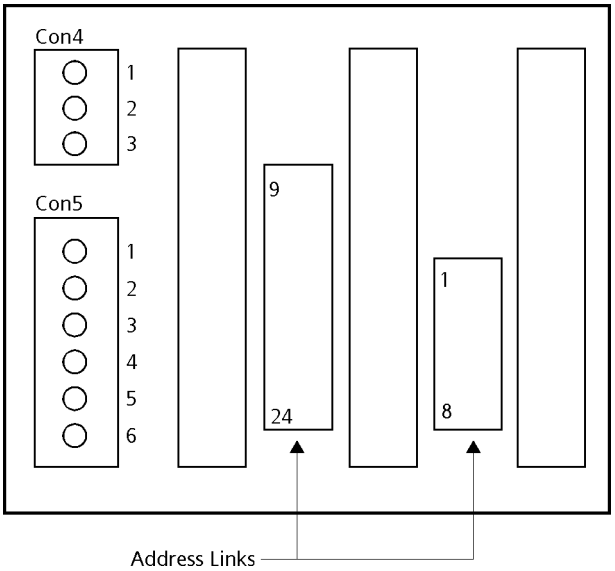

Figure A.14: General Arrangement from Rear—VBC—VLM1

A.4.2 Configuration

A.4.2.1 Vital Logic Card (VLC)

None

A.4.2.2 Configuration Element Card (CEC)

The CED is contained in two PROMs, high byte and low byte (see figure A.13). The high byte PROM is in socket U1 HIGH. The low byte PROM is in socket U2 LOW.

The settings for switch SW1 (figure A.15) are provided on the Installation Assembly Details Printout generated by the CS from the Application Data.

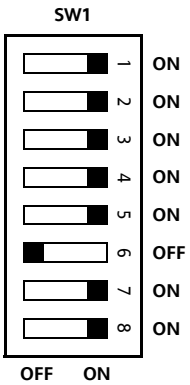

Figure A.15: Example SW1 Settings—CEC—VLM1

A.4.2.3 Output Power Card (OPC)

None

A.4.2.4 Vital Backplane Card (VBC)

Details of the setting of the links LK1 to LK24 (see figure A.14) must correspond to the physical address of the system in the Application Data printout.

A.4.3 Indications

A.4.3.1 Vital Logic Card (VLC)

A.4.3.1.1 Start Up Indications

Diagnostic LEDs display the module type code, shortly followed by a firmware version code (reflecting the firmware version installed in the module). Firmware version is displayed for approximately 8 seconds, after which all diagnostic LEDs extinguish.

A.4.3.1.2 Operation Indications

The module commences flashing the green watchdog LED to indicate the module is operational and working correctly.

A.4.3.1.3 Fault Codes

CODE(H)	FAULT DESCRIPTION	ACTION
00	No Fault	Not a fault
01	Second Negation Error	Indicates fault on other modules

Table A14: Fault Codes—VLM1

CODE(H)	FAULT DESCRIPTION	ACTION
03	PROM Checksum Error	Replace VLM1
04	Stack Guard Error	"
05	RAM Error	"
06	Interrupt Error	"
07	Termination Error	"
08	Processor Error	"
09	Stack Error	"
0A	Run Time Error A	"
0B	Run Time Error B	"
0C	Run Time Error C	"
0D	Run Time Error D	"
0E	Run Time Error E	"
0F	Run Time Error F	"
10	Run Time Error G	"
11	Run Time Error H	"
12	Run Time Error I	"
13	Run Time Error J	"
14	Run Time Error K	"
15	Run Time Error L	"
16	Run Time Error M	"
17	Run Time Error N	"
18	Run Time Error O	"
19	Run Time Error P	"
1A	Run Time Error Q	"
1B	Run Time Error R	"
1C	Run Time Error S	"
1D	Run Time Error T	"
1E	Run Time Error U	"
1F	Run Time Error V	"
20	Run Time Error W	"
21	Run Time Error X	"
22	Run Time Error Y	Replace VLM1
23	Run Time Error Z	"
2D	Health Monitoring Time Error	Indicates fault on other modules

Table A14: Fault Codes—VLM1 ***(Continued)***

CODE(H)	FAULT DESCRIPTION	ACTION
2E	Health Monitoring Health Error	"
2F	Health Monitoring Scheduling Error	"
33	Master IMB Interface Error	"
34	Master IMB Timeout Module DM	Replace the DM module
35	Master IMB Timeout Module 01	Check other modules to identify one that caused VLM shutdown—ie reported a failure other than IMB timeout. Replace the identified module.
36	Master IMB Timeout Module 02	"
37	Master IMB Timeout Module 03	"
38	Master IMB Timeout Module 04	"
39	Master IMB Timeout Module 05	"
3A	Master IMB Timeout Module 06	"
3B	Master IMB Timeout Module 07	"
3C	Master IMB Timeout Module 08	"
3D	Master IMB Timeout Module 09	"
3E	Master IMB Timeout Module 10	"
3F	Master IMB Timeout Module 11	"
40	Master IMB Timeout Module 12	"
41	Master IMB Timeout Module 13	"
42	Master IMB Timeout Module 14	"
43	Master IMB Timeout Module 15	"
44	Master IMB Timeout Module 16	"
45	Master IMB Timeout Module 17	"
46	Master IMB Timeout Module 18	"
47	Master IMB Timeout Module 19	"
48	Master IMB Timeout Module 20	"
49	Master IMB Timeout Module 21	"
4A	Master IMB Timeout Module 22	"
4B	Master IMB Timeout Module 23	"
4C	Master IMB Timeout Module 24	"
4D	Master IMB Timeout Module 25	"
4E	Master IMB Timeout Module 26	"
4F	Master IMB Timeout Module 27	"
50	Master IMB Timeout Module 28	"
51	Master IMB Timeout Module 29	"

Table A14: Fault Codes—VLM1 *(Continued)*

CODE(H)	FAULT DESCRIPTION	ACTION
52	Master IMB Timeout Module 30	"
53	Master IMB Timeout Module 31	"
54	Master IMB Timeout Module 32	"
55	Master IMB Timeout Module 33	"
56	Master IMB Timeout Module 34	"
57	Master IMB Timeout Module 35	"
58	Master IMB Timeout Module 36	"
59	Master IMB Timeout Module 37	"
5A	Master IMB Data Error Module DM	Replace DM module
5B	Master IMB Data Error Module 01	Replace Module 01
5C	Master IMB Data Error Module 02	Replace Module 02
5D	Master IMB Data Error Module 03	Replace Module 03
5E	Master IMB Data Error Module 04	Replace Module 04
5F	Master IMB Data Error Module 05	Replace Module 05
60	Master IMB Data Error Module 06	Replace Module 06
61	Master IMB Data Error Module 07	Replace Module 07
62	Master IMB Data Error Module 08	Replace Module 08
63	Master IMB Data Error Module 09	Replace Module 09
64	Master IMB Data Error Module 10	Replace Module 10
65	Master IMB Data Error Module 11	Replace Module 11
66	Master IMB Data Error Module 12	Replace Module 12
67	Master IMB Data Error Module 13	Replace Module 13
68	Master IMB Data Error Module 14	Replace Module 14
69	Master IMB Data Error Module 15	Replace Module 15
6A	Master IMB Data Error Module 16	Replace Module 16
6B	Master IMB Data Error Module 17	Replace Module 17
6C	Master IMB Data Error Module 18	Replace Module 18
6D	Master IMB Data Error Module 19	Replace Module 19
6E	Master IMB Data Error Module 20	Replace Module 20
6F	Master IMB Data Error Module 21	Replace Module 21
70	Master IMB Data Error Module 22	Replace Module 22
71	Master IMB Data Error Module 23	Replace Module 23
72	Master IMB Data Error Module 24	Replace Module 24
73	Master IMB Data Error Module 25	Replace Module 25

Table A14: Fault Codes—VLM1 ***(Continued)***

CODE(H)	FAULT DESCRIPTION	ACTION
74	Master IMB Data Error Module 26	Replace Module 26
75	Master IMB Data Error Module 27	Replace Module 27
76	Master IMB Data Error Module 28	Replace Module 28
77	Master IMB Data Error Module 29	Replace Module 29
78	Master IMB Data Error Module 30	Replace Module 30
79	Master IMB Data Error Module 31	Replace Module 31
7A	Master IMB Data Error Module 32	Replace Module 32
7B	Master IMB Data Error Module 33	Replace Module 33
7C	Master IMB Data Error Module 34	Replace Module 34
7D	Master IMB Data Error Module 35	Replace Module 35
7E	Master IMB Data Error Module 36	Replace Module 36
7F	Master IMB Data Error Module 37	Replace Module 37
80	CED Checksum Error	Replace CED PROM
81	CED CSS Compatibility Index Error	"
82	CED VBC Link Error	Check installation address and VBC linking
83	CED Parity Error	"
84	CED Data Version Error	Check data version switch settings
85	CED Data Error	Replace CED PROM
86	CED Data Error	"
87	CED No Logic States Error	"
88	CED Module Number Error	"
89	CED Slave Kind Error	"
8A	CED Module Compatibility Index Error	"
8B	CED Module Compatibility Index Parity Error	"
8C	CED Module Type Error	"
8D	CED Module Compatibility Index Error	"
8E	CED Module Compatibility Index Parity Error	"
8F	CED Module Type Error	"
90	CED Timer Error	"
91	CED Initial Data Error	"
92	CED Global Data Error	"
93	CED Fixed Data Error	Replace CED PROM
94	CED Variable Data Error	"

Table A14: Fault Codes—VLM1 ***(Continued)***

CODE(H)	FAULT DESCRIPTION	ACTION
95	CED Node Type Error	"
96	CED Depth Error	"
97	CED Pointer Error	"
98	CED Timer Error	"
99	CED Logic Error	"
9A	CED Global Data Error	"
9B	CED Fixed Data Error	"
9C	CED Variable Data Error	"
9D	CED Logic Error	"
9E	CED Backplane Address Error	"
9F	CED Mnemonic Error	"
A0	IMB Data Length Error	Indicates fault on other modules.
A1	IMB Slave Kind Error	"
A2	IMB Communication Time Error	"
A3	IMB Slave Kind Error	"
A4	IMB Module Number Error	"
A5	IMB Parity Error	"
A6	IMB Module Number Error	"
A7	IMB Module Type Error	"
A8	IMB Port Address Range Error	"
A9	IMB Parity Error	"
AA	IMB Module Number Error	"
AB	IMB Module Type Error	"
AC	IMB Message Byte Number Error	"
AD	IMB Message Bit Number Error	"
AE	IMB Input Message Length Error	"
AF	IMB Last Pointer Error	"
B0	IMB Module Number Error	"
B1	IMB Module Type Error	"
B2	IMB Module Number Error	"
B3	IMB Module Type Error	"
B4	IMB Message Byte Number Error	"
B5	IMB Message Bit Number Error	Indicates fault on other modules.
B6	IMB Input Message Length Error	"

Table A14: Fault Codes—VLM1 ***(Continued)***

CODE(H)	FAULT DESCRIPTION	ACTION
B7	IMB Last Pointer Error	"
B8	IMB Module Number Error	"
B9	IMB Module Type Error	"
BA	IMB Data Error	"
BB	IMB Module Number Error	"
BC	IMB Module Type Error	"
BD	IMB Message Byte Number Error	"
BE	IMB Message Bit Number Error	"
BF	IMB Output Message Length Error	"
C0	IMB Last Pointer Error	"
C1	IMB Number I/O Bits Error	"
C2	IMB Module Number Error	"
C3	IMB Slave Kind Error	"
C4	IMB Timeout Error	"
C5	IMB Scheduler Error	"
C8	Invalid Timer Error	Replace VLM1
C9	Timer Difference Error	"
CA	Timer Expiry Difference Error	"
CB	Invalid Timer Error	"
CC	Timer Difference Error	"
CD	Timer Expiry Difference Error	"
CE	Timer Data Error	"
D2	Logic Sequence Error	"
D3	Depth Check Error	"
D4	Logic Sequence Error	"
D5	Depth Check Error	"
DC	OPCR Initialise Error	Check supply to OPC. Power off system and restart after 40 seconds. If fault persists replace OPC or OPC PFM
DD	NOPCR Error	Replace VLM1
DE	NOPCR Error	"
DF	Initial Maximum Time Error	"
E0	Initial Minimum Time Error	"
E1	Initial Sequence Error	Replace VLM1
E2	Maximum Time Error	"

Table A14: Fault Codes—VLM1 ***(Continued)***

CODE(H)	FAULT DESCRIPTION	ACTION
E3	Minimum Time Error	"
E4	Sequence Error	"
E6	CED Checksum Error	Replace CED PROM
E7	Comp Read Data Error	Replace VLM1
E8	Comp Read Pointer Error	"
E9	Comp Write Data Error	"
EA	Comp No. Logic States Data Error	"
F0	Number Of Timers Error	"
F1	Number Of Comp Timers Error	"
F2	Cycle Time > 1 sec Error	Too much logic and too many modules—check installation design.
F3	Delay 150 ms Error	Replace VLM1
F4	APPDEL Value Error	"

Table A14: Fault Codes—VLM1 ***(Continued)***

A.4.3.2 Configuration Element Card (CEC)

None

A.4.3.3 Output Power Card (OPC)

None

A.4.3.4 Vital Backplane Card (VBC)

None.

A.4.4 External Connections

All external connections to the VLM1 are made via the OPC PFM which has tails with plugs attached to plug into connectors 4 and 5 on the VBC.

The OPC PFM External Connector is a 15 way plug and socket Klippon type BLA/SLA.

Figure A.16 depicts the external connection details of the OPC PFM.

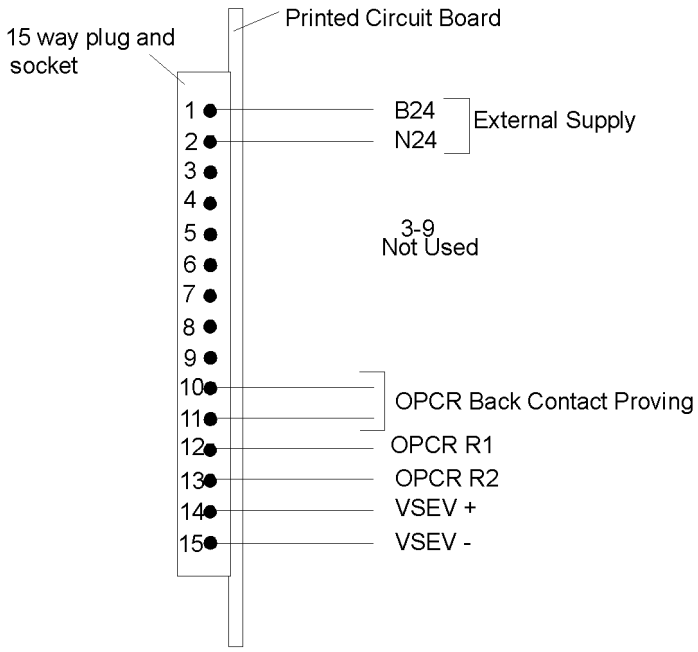

Figure A.16: External Connections—OPC PFM—VLM1

24 V supply	4 A
OPCR Drive	0.8 A
VSEV	1 A
OPCR Back Contact	20 mA

A.5 Vital Lamp Output Modules (VLOM)

A.5.1 Description

The VLOM is the interface between WESTRACE and signalling lamps. VLOM outputs directly drive signal lamps and other nominated equipment. The output may be steady, flashing or off.

The VLOM modules with 12 lamp outputs comprise three printed circuit boards:

- VPIO Digital Board (VPIODB);
- two VLOM Analogue Boards (VLOMAB).

A.5.2 Particulars

The VLOM is available with an ac lamp output voltage of 110V. VLOM modules have a flashing output (signified with 'F') and they are available with twelve lamp outputs (signified with 'T'); VLOMFT110.

A.5.3 Characteristics of VLOM 110

Nominal Signalling Voltage (V_{sig} Input)	110 Vac
External Fuse Protection	3.0 A
Vsig Input (min.)	100 Vac
Vsig Input (max)	130 Vac
Lamp proving current levels	< 100 mA, lamp off > 160 mA, lamp on

A maximum of 26 VLOM modules may be installed in any one system. Refer to the WESTRACE Application Manual for further details.

A.5.4 Function

The VLOM requires an external signalling supply that is switched to source six (or twelve) voltages to drive up to six (or twelve) signalling lamps simultaneously.

The VPIODB is processor based and is responsible for interfacing with both the VLM and the VLOMAB(s). It performs the module's self-tests, housekeeping, monitoring of the analogue card's integrity and Health Monitoring functions.

Lamp Outputs are not isolated from the signalling supply, and use a common return. The VLOM provides Vital Hot filament proving and non-vital cold filament detection.

The VLOM will attempt to isolate an incorrectly energised output by attempting to blow an on-board fuse. If this action is unsuccessful, the VLOM will initiate second negation (shutdown) without delay.

The fuse blowing process is known as *graceful degradation*.

A.5.5 Configuration

None

A.5.6 Indications

A.5.6.1 Start Up

Diagnostic LEDs display module type code, shortly followed by a firmware version code (reflecting the firmware version installed in the module). Firmware version is displayed for approximately 8 seconds, after which all diagnostic LEDs will extinguish.

A.5.6.2 Operation

The module will commence flashing the green watchdog LED to indicate the module is operational and working correctly.

A.5.6.3 Fault Codes

CODE(H)	FAULT DESCRIPTION	ACTION
00	No Fault	Not a fault.
01	Second Negation Error	Indicates a fault on other modules.
02	Module Type Error	Replace VLOM
03	EPROM Checksum Error	"
04	Stack Guard Error	"
05	RAM Error	"
06	Interrupt Error	"
07	Termination Error	"
08	Processor Error	"
09	Stack Error	"
0A	Run Time Error A	"
0B	Run Time Error B	"
0C	Run Time Error C	"
0D	Run Time Error D	"
0E	Run Time Error E	"
0F	Run Time Error F	"
10	Run Time Error G	"
11	Run Time Error H	"
12	Run Time Error I	"
13	Run Time Error J	Replace VLOM

Table A15: Fault Codes—VLOM

CODE(H)	FAULT DESCRIPTION	ACTION
14	Run Time Error K	"
15	Run Time Error L	"
16	Run Time Error M	"
17	Run Time Error N	"
18	Run Time Error O	"
19	Run Time Error P	"
1A	Run Time Error Q	"
1B	Run Time Error R	"
1C	Run Time Error S	"
1D	Run Time Error T	"
1E	Run Time Error U	"
1F	Run Time Error V	"
20	Run Time Error W	"
21	Run Time Error X	"
22	Run Time Error Y	"
23	Run Time Error Z	"
24	IMB Timeout Error	"
25	IMB Address Error	"
26	IMB Address Parity Error	"
27	IMB CI Transfer Error	"
28	IMB Transfer Type Error	"
29	IMB Message Length Error	"
2A	IMB True Byte Error	"
2B	IMB Check Message Error	"
2C	IMB Inconsistency Error	"
2D	Health Monitoring Time Error	Indicates a fault on other modules
2E	Health Monitoring Health Error	"
2F	Health Monitoring Scheduling Error	Replace VLOM
30	Module Type and Fault Code Error	"
31	ST IMB Start Up Timeout	"
32	ST IMB Too Few IMB Calls	"
33	ST IMB Too Many IMB Calls	"
34	ST IMB Too Few ST Calls	"
80	Negation Fail Error	Replace VLOM

Table A15: Fault Codes—VLOM ***(Continued)***

CODE(H)	FAULT DESCRIPTION	ACTION
81	Initialise Program Check Error	"
82	Progress Check Error	"
83	Cycle Time Error	"
84	CPU Speed Error	"
85	Variable Corruption Error	"
8C	Gain Check Offset Base Error	"
8D	Gain Check Offset Ch 1 Error	"
8E	Gain Check Offset Ch 2 Error	"
8F	Gain Check Offset Ch 3 Error	"
90	Gain Check Offset Ch 4 Error	"
91	Gain Check Offset Ch 5 Error	"
92	Gain Check Offset Ch 6 Error	"
93	Gain Check Offset Ch 7 Error	"
94	Gain Check Offset Ch 8 Error	"
95	Gain Check Offset Ch 9 Error	"
96	Gain Check Offset Ch 10 Error	"
97	Gain Check Offset Ch 11 Error	"
98	Gain Check Offset Ch 12 Error	"
99	Gain Check Detect Base Error	"
9A	Gain Check Detect Ch 1 Error	"
9B	Gain Check Detect Ch 2 Error	"
9C	Gain Check Detect Ch 3 Error	"
9D	Gain Check Detect Ch 4 Error	"
9E	Gain Check Detect Ch 5 Error	"
9F	Gain Check Detect Ch 6 Error	"
A0	Gain Check Detect Ch 7 Error	"
A1	Gain Check Detect Ch 8 Error	"
A2	Gain Check Detect Ch 9 Error	"
A3	Gain Check Detect Ch 10 Error	"
A4	Gain Check Detect Ch 11 Error	"
A5	Gain Check Detect Ch 12 Error	"
AA	ADC Target Error	"
AB	ADC Reference Error	"
BD	Diverse Gain Filter Hi Base Error	Replace VLOM

Table A15: Fault Codes—VLOM ***(Continued)***

CODE(H)	FAULT DESCRIPTION	ACTION
BE	Diverse Gain Filter Hi Ch 1 Error	"
BF	Diverse Gain Filter Hi Ch 2 Error	"
C0	Diverse Gain Filter Hi Ch 3 Error	"
C1H	Diverse Gain Filter Hi Ch 4 Error	"
C2H	Diverse Gain Filter Hi Ch 5 Error	"
C3	Diverse Gain Filter Hi Ch 6 Error	"
C4	Diverse Gain Filter Hi Ch 7 Error	"
C5	Diverse Gain Filter Hi Ch 8 Error	"
C6	Diverse Gain Filter Hi Ch 9 Error	"
C7H	Diverse Gain Filter Hi Ch 10 Error	"
C8	Diverse Gain Filter Hi Ch 11 Error	"
C9	Diverse Gain Filter Hi Ch 12 Error	"
D7	Ground Test Filter Det Base Error	"
D8	Ground Test Filter Det Brd 1 Error	Check PFM mating with this module, else Replace VLOM or PFM
D9	Ground Test Filter Det Brd 2 Error	Check PFM mating with this module, else Replace VLOM or PFM
DA	Ground Test Filter Line Base Error	Replace VLOM
DB	Ground Test Filter Line Brd 1 Error	Check PFM mating with this module, else Replace VLOM or PFM
DC	Ground Test Filter Line Brd 2 Error	Check PFM mating with this module, else Replace VLOM or PFM
EA	True Decode Parity Error	Replace VLOM
EB	Comp Decode Parity Error	"
F0	Gain Check Invalid Data	"
FA	Ground Test Invalid Data	"
FC	Cold Proving Filter Error	"
FD	Cold Proving Lamp Error	"

Table A15: Fault Codes—VLOM ***(Continued)***

A.5.7 External Connections

External connections to the VLOM are made via the VLOM PFM.

The VLOM PFM External Connector is a 19 way plug and socket Klippon type BLA/SLA.

Figure A.17 depicts the external connection details of the VLOM PFM.

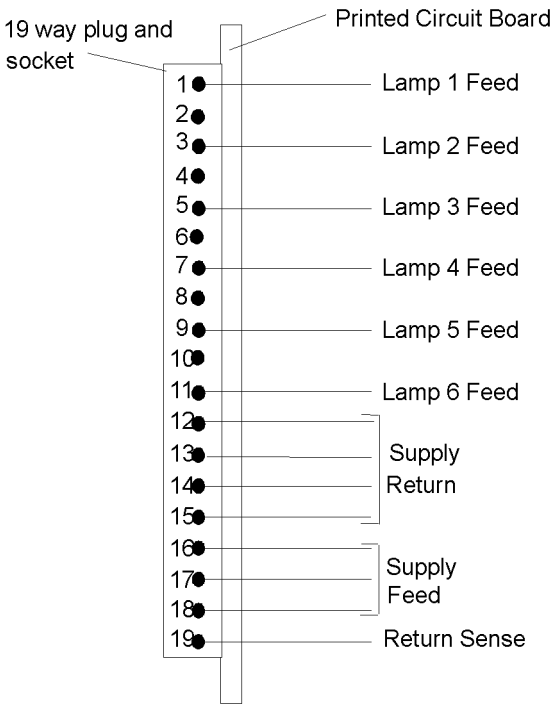

Terminals 2, 4, 6, 8 & 10 are not used

Figure A.17: External Connections—VLOM PFM—VLOM

The Return Sense must be connected to the Supply Return Bus Bar. We recommend that the return sense and supply return be run as a twisted pair.

A.6 Vital Relay Output Modules (VROM)

A.6.1 Description

The VROM directly drives the coils of signalling relays. It is comprised of two printed circuit boards:

- VPIO Digital Board (VPIODB);
- VROM Analogue Board (VROMAB).

A.6.2 Particulars

The VROM is available with a relay output voltage of 50 Vdc.

A.6.3 Characteristics of VROM 50

Nominal Signalling Supply Voltage[1]	50 Vdc
Signalling Supply Input (minimum, trough Voltage)	42 Vdc
Signalling Supply Input (maximum, peak Voltage)	60 Vdc
External Fuse Protection	2.5 A
Output Load	3 W nominal per output 18 W max. continuous output per module

1. Signalling Supply Voltage Ripple must be semi smooth and within the input load minimum and maximum shown .

A.6.4 Function

The VROM requires an external signalling supply from which it generates eight isolated voltage sources to drive up to eight signalling relays simultaneously.

The VPIODB is processor based and it interfaces with the VLM and the VROMAB. It performs self-testing, housekeeping, monitoring of the analogue card's integrity and Health Monitoring functions for the module.

Whenever the VROM detects an incorrectly energised output (according to the internal state), the module will attempt to isolate the particular output by blowing an in-line fuse. If this action is unsuccessful, the VROM will initiate system negation (shutdown) without delay.

The process of fuse blowing is known as *graceful degradation*.

A.6.5 Configuration

None

A.6.6 Indications

A.6.6.1 Start Up

Diagnostic LEDs display the module type code, shortly followed by a firmware version code (reflecting the firmware version installed in the module). The firmware version is displayed for approximately eight seconds, after which all diagnostic LEDs will extinguish.

A.6.6.2 Operation

The module will commence flashing the green watchdog LED to indicate the module is operational and working correctly.

A.6.6.3 Fault Codes

CODE(H)	FAULT DESCRIPTION	ACTION
00	No Fault	Not a fault
01	Second Negation Error	Indicates fault on other modules.
02	Module Type Error	Replace VROM
03	EPROM Checksum Error	"
04	Stack Guard Error	"
05	RAM Error	"
06	Interrupt Error	"
07	Termination Error	"
08	Processor Error	"
09	Stack Error	"
0A	Run Time Error A	"
0B	Run Time Error B	"
0C	Run Time Error C	"
0D	Run Time Error D	"
0E	Run Time Error E	"
0F	Run Time Error F	"
10	Run Time Error G	"
11	Run Time Error H	"
12	Run Time Error I	"
13	Run Time Error J	"
14	Run Time Error K	"
15	Run Time Error L	"
16	Run Time Error M	"

Table A16: Fault Codes—VROM

CODE(H)	FAULT DESCRIPTION	ACTION
17	Run Time Error N	Replace VROM
18	Run Time Error O	"
19	Run Time Error P	"
1A	Run Time Error Q	"
1B	Run Time Error R	"
1C	Run Time Error S	"
1D	Run Time Error T	"
1E	Run Time Error U	"
1F	Run Time Error V	"
20	Run Time Error W	"
21	Run Time Error X	"
22	Run Time Error Y	"
23	Run Time Error Z	"
24	IMB Timeout Error	"
25	IMB Address Error	"
26	IMB Address Parity Error	"
2B	IMB Check Message Error	"
2C	IMB Inconsistency Error	"
2D	Health Monitoring Time Error	Indicates a fault on other modules
2E	Health Monitoring Health Error	"
2F	Health Monitoring Scheduling Error	Replace VROM
30	Module Type and Fault Code Error	"
31	ST IMB Start Up Timeout	"
32	ST IMB Too Few IMB Calls	"
33	ST IMB Too Many IMB Calls	"
34	ST IMB Too Few ST Calls	"
8C	True IMB Parity Error	"
8D	Comp IMB Parity Error	"
8E	True Channel Status Base Error	"
8F	True Channel Status Ch 1 Error	"
90	True Channel Status Ch 2 Error	"
91	True Channel Status Ch 3 Error	"
92	True Channel Status Ch 4 Error	"
93	True Channel Status Ch 5 Error	"

Table A16: Fault Codes—VROM *(Continued)*

CODE(H)	FAULT DESCRIPTION	ACTION
94	True Channel Status Ch 6 Error	Replace VROM
95	True Channel Status Ch 7 Error	"
96	True Channel Status Ch 8 Error	"
97	Comp Channel Status Base Error	"
98	Comp Channel Status Ch 1 Error	"
99	Comp Channel Status Ch 2 Error	"
9A	Comp Channel Status Ch 3 Error	"
9B	Comp Channel Status Ch 4 Error	"
9C	Comp Channel Status Ch 5 Error	"
9D	Comp Channel Status Ch 6 Error	"
9E	Comp Channel Status Ch 7 Error	"
9F	Comp Channel Status Ch 8 Error	"
A0	ADC Voltage Reference Error	"
A1	ADC Target Failure	"
A2	True Relay Test Base Error	"
A3	True Relay Test Ch 1 Error	"
A4	True Relay Test Ch 2 Error	"
A5	True Relay Test Ch 3 Error	"
A6	True Relay Test Ch 4 Error	"
A7	True Relay Test Ch 5 Error	"
A8	True Relay Test Ch 6 Error	"
A9	True Relay Test Ch 7 Error	"
AA	True Relay Test Ch 8 Error	"
AB	Comp Relay Test Base Error	"
AC	Comp Relay Test Ch 1 Error	"
AD	Comp Relay Test Ch 2 Error	"
AE	Comp Relay Test Ch 3 Error	"
AF	Comp Relay Test Ch 4 Error	"
B0	Comp Relay Test Ch 5 Error	"
B1	Comp Relay Test Ch 6 Error	"
B2	Comp Relay Test Ch 7 Error	"
B3	Comp Relay Test Ch 8 Error	"
B4	U Woggle Test Base Error	"
B5	U Woggle Test Ch 1 Error	"

Table A16: Fault Codes—VROM *(Continued)*

CODE(H)	FAULT DESCRIPTION	ACTION
B6	U Woggle Test Ch 2 Error	Replace VROM
B7	U Woggle Test Ch 3 Error	"
B8	U Woggle Test Ch 4 Error	"
B9	U Woggle Test Ch 5 Error	"
BA	U Woggle Test Ch 6 Error	"
BB	U Woggle Test Ch 7 Error	"
BC	U Woggle Test Ch 8 Error	"
BD	V Woggle Test Bad Result Error	"
BE	V Woggle Test Base Error	"
BF	V Woggle Test Ch 1 Error	"
C0	V Woggle Test Ch 2 Error	"
C1	V Woggle Test Ch 3 Error	"
C2	V Woggle Test Ch 4 Error	"
C3	V Woggle Test Ch 5 Error	"
C4	V Woggle Test Ch 6 Error	"
C5	V Woggle Test Ch 7 Error	"
C6	V Woggle Test Ch 8 Error	"
C7	Invalid Comp Sample	"
C8	Invalid Comp Relay State	"
C9	Cycle Time Error	"
CA	Invalid Comp Relay State	"
CB	Invalid Comp Relay State	"
CC	Invalid Comp Relay State	"
CD	CPU Speed Error	"
CE	Variable Corruption Error	"
CF	Init Program Check Error	"
D0	Life Program Check Error	"

Table A16: Fault Codes—VROM *(Continued)*

A.6.7 External Connections

The VROM PFM External Connector is a 19 way plug and socket Klippon type BLA/SLA.

Figure A.18 depicts the external connection details of the VROM PFM.

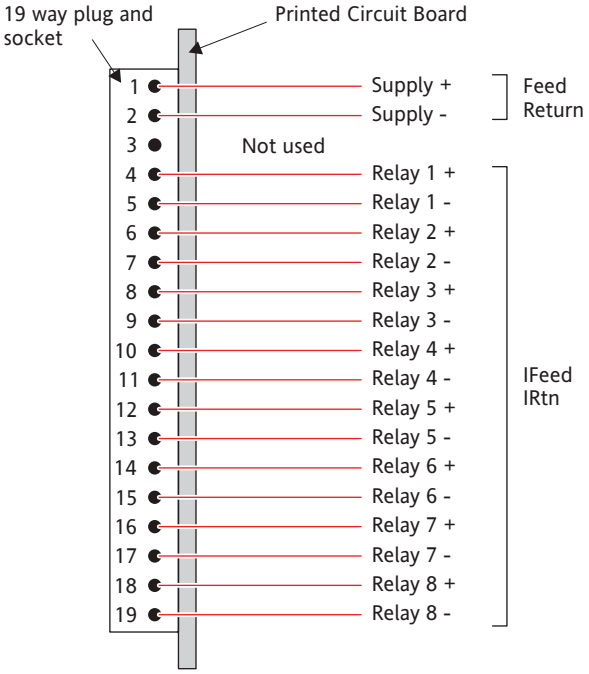

Figure A.18: External Connections—VROM PFM—VROM

A.7 Vital Parallel Input Modules (VPIM)

A.7.1 Description

The VPIM is the interface between WESTRACE and signalling inputs such as point detection and track circuits. VPIM inputs connect directly to external signalling equipment.

The VPIM module is comprised of two printed circuit boards:

- VPIO Digital Board (VPIODB), and;
- VPIM Analogue Board (VPIMAB).

A.7.2 Particulars

The VPIM is available with an input voltage of 50 Vdc.

A.7.3 Characteristics of VPIM 50

Nominal Voltage	50 Vdc
De-energised Input Voltage range	–100 V to +10.5 V
Energised Input Voltage range	30 V to 100 V

A.7.4 Function

The VPIODB is processor based and it interfaces with the VLM and the VPIMAB. It performs self-testing, housekeeping, monitoring of the analogue card's integrity and Health Monitoring functions for the module.

All VPIM inputs have a non-vital filter to permit operation with inputs with high levels of ac. The VPIM samples the input channels, and rejects any input that is changing at a rate between 45Hz and 11kHz. All inputs to the VPIM are filtered to reject fleeting inputs.

Each VPIM input is individually fused to protect the module from over voltage.

A.7.5 Configuration

None.

A.7.6 Indications

A.7.6.1 Start Up

Diagnostic LEDs display the module type code, shortly followed by a firmware version code (reflecting the firmware version installed in the

module). The firmware version is displayed for approximately 8 seconds, after which all diagnostic LEDs will extinguish.

A.7.6.2 Operation

The module will commence flashing the green watchdog LED to indicate the module is operational and working correctly.

A.7.6.3 Fault Codes

CODE(H)	FAULT DESCRIPTION	ACTION
00	No Fault	Not a fault
01	Second Negation Error	Indicates fault in another module
02	Module Type Error	Replace VPIM
03	EPROM Checksum Error	"
04	Stack Guard Error	"
05	RAM Error	"
06	Interrupt Error	"
07	Termination Error	"
08	Processor Error	"
09	Stack Error	"
0A	Run Time Error A	"
0B	Run Time Error B	"
0C	Run Time Error C	"
0D	Run Time Error D	"
0E	Run Time Error E	"
0F	Run Time Error F	"
10	Run Time Error G	"
11	Run Time Error H:	"
12	Run Time Error I	"
13	Run Time Error J	"
14	Run Time Error K	"
15	Run Time Error L	"
16	Run Time Error M	"
17	Run Time Error N	"
18	Run Time Error O	"
19	Run Time Error P	"
1A	Run Time Error Q	"

Table A17: Fault Codes—VPIM

CODE(H)	FAULT DESCRIPTION	ACTION
1B	Run Time Error R	Replace VPIM
1C	Run Time Error S	"
1D	Run Time Error T	"
1E	Run Time Error U	"
1F	Run Time Error V	"
20	Run Time Error W	"
21	Run Time Error X	"
22	Run Time Error Y	"
23	Run Time Error Z	"
24	IMB Timeout Error	"
25	IMB Address Error	"
26	IMB Address Parity Error	"
27	IMB CI Transfer Error	"
28	IMB Transfer Type Error	"
29	IMB Message Length Error	"
2A	IMB True Byte Error	"
2B	IMB Check Message Error	"
2C	IMB Inconsistency Error	"
2D	Health Monitoring Time Error	Indicates fault in another module
2E	Health Monitoring Health Error	"
2F	Health Monitoring Scheduling Error	Replace VPIM
30	Module Type and Fault Code Error	"
31	ST IMB Start Up Timeout	"
32	ST IMB Too Few IMB Calls	"
33	ST IMB Too Many IMB Calls	"
34	ST IMB Too Few ST Calls	"
B4	Progress Check Error	"
BE	Sampler Spacing Test Error	"
C8	Self Test Error	"
D2	ADC Test Pattern Error	"
DC	ADC Voltage Reference Error	"

Table A17: Fault Codes—VPIM ***(Continued)***

A.7.7 External Connections

External connections to the VPIM are made via the VPIM PFM.

The VPIM PFM External Connector is a double stacked 24 way plug and socket Klippon type BLA/SLA.

Figure A.19 depicts the external connection details of the VPIM PFM.

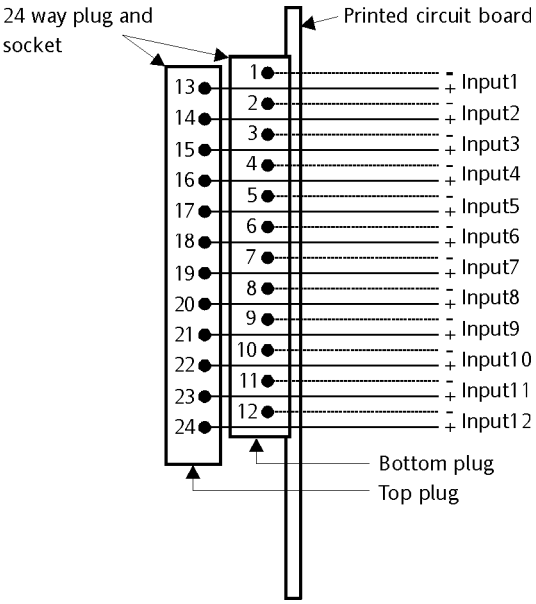

Figure A.19: External Connections—VPIM PFM—VPIM

A.8 Vital Telemetry Continuous Module (VTC)

A.8.1 Description

The VTC module enables vital data communication between two WESTRACE installations by providing continuous data transfer.

A.8.2 Particulars

The VTC is comprised of a single printed circuit board.

It communicates using RS232-C and is configured as a DTE.

The address of the module is defined in the Application Data for the system, held in PROMs on the VLM or CEC where it is used.

A.8.3 Function

The VTC continuously transmits data over a dedicated serial channel to another VTC.

Two forms of the data are transmitted; the True and Complement representations of the data. These messages are formed into code words, and the two code words are transmitted separately over the serial channel.

If in any two second period either VTC fails to receive a correct 'pair of code words' from the serial channel, it will indicate a 'Loss of Input Channel' (LOIC) status to the VLM by setting LOIC to logic state 0. This status will remain until the VTC receives a correct pair of code words.

When LOIC is set to logic state 0, the VLM ensures that all inputs derived from the VTC message are set to logic state 0 to ensure safety. All data received from the VTC during this period is ignored, and will remain so until the LOIC status is set to logic state 1 by the receipt of valid code words.

The VTC derives power for its communication circuits from an external 24 Vdc supply, generated by the OPC (as part of the VLM). This supply is known as the Vital Serial Enable Voltage (VSEV). Removal of this voltage positively prevents the VTC from transmitting and receiving data. This is done when the VLM cannot assure the integrity of the data and hence the safety of the system under failure conditions. Removal of the VSEV occurs simultaneously with de-energising of the OPCR.

The VTC is processor based and it interfaces with the VLM. It performs self-testing, housekeeping and Health Monitoring functions for the module.

Note: ***Do not connect the signal ground line to earth, as this may result in an unsafe condition though the introduction of earth loops and induced earth potentials.***

A.8.4 Configuration

None.

A.8.5 Indications

A.8.5.1 Start Up

Diagnostic LEDs display the module type code, shortly followed by a firmware version code (reflecting the firmware version installed in the module). The firmware version is displayed for approximately 8 seconds, after which all diagnostic LEDs will extinguish.

A.8.5.2 Operation

The module will commence flashing the green watchdog LED to indicate the module is operational and working correctly.

A.8.5.3 Fault Codes

CODE(H)	FAULT DESCRIPTION	ACTION
00	No Fault	Not a fault
01	Second Negation Error	Indicates a fault on other modules.
02	Module Type Error	Replace VTC
03	EPROM Checksum Error	"
04	Stack Guard Error	"
05	RAM Error	"
06	Interrupt Error	"
07	Termination Error	"
08	Processor Error	"
09	Stack Error	"
0A	Run Time Error A	"
0B	Run Time Error B	"
0C	Run Time Error C	"
0D	Run Time Error D	"
0E	Run Time Error E	"
0F	Run Time Error F	"
10	Run Time Error G	"
11	Run Time Error H:	"
12	Run Time Error I	"
13	Run Time Error J	"

Table A18: Fault Codes—VTC

CODE(H)	FAULT DESCRIPTION	ACTION
14	Run Time Error K	Replace VTC
15	Run Time Error L	"
16	Run Time Error M	"
17	Run Time Error N	"
18	Run Time Error O	"
19	Run Time Error P	"
1A	Run Time Error Q	"
1B	Run Time Error R	"
1C	Run Time Error S	"
1D	Run Time Error T	"
1E	Run Time Error U	"
1F	Run Time Error V	"
20	Run Time Error W	"
21	Run Time Error X	"
22	Run Time Error Y	"
23	Run Time Error Z	"
24	IMB Timeout Error	"
25	IMB Address Error	"
26	IMB Address Parity Error	"
27	IMB CI Transfer Error	"
28	IMB Transfer Type Error	"
29	IMB Message Length Error	"
2A	IMB True Byte Error	"
2B	IMB Check Message Error	"
2C	IMB Inconsistency Error	"
2D	Health Monitoring Time Error	Indicates a fault in another module
2E	Health Monitoring Health Error	"
2F	Health Monitoring Scheduling Error	Replace VTC
30	Module Type and Fault Code Error	"
31	ST IMB Start Up Timeout	"
32	ST IMB Too Few IMB Calls	"
33	ST IMB Too Many IMB Calls	"
34	ST IMB Too Few ST Calls	"
80	True IMB Parity Error	"

Table A18: Fault Codes—VTC ***(Continued)***

CODE(H)	FAULT DESCRIPTION	ACTION
81	Comp IMB Parity Error	Replace VTC
97	Hardware Timer Error	"
98	Corrupt Data or Operating Error	"
99	Corrupt Data Input	"
9A	Primary Loc Error	"
9B	Corrupt Data or Transmit Error	"
9C	Insufficient Time Lapse	"
9D	True Output Parity Check Error	"
9E	Comp Output Parity Check Error	"

Table A18: Fault Codes—VTC ***(Continued)***

A.8.6 External Connections

External Connections to the VTC are made via the SIO232 PFM.

The SIO232 PFM External Connectors are a DB25 plug and socket for RS232 interface, and a 2 way plug and socket Klippon type BLA/SLA for power.

Figure A.20 depicts the external connection details of the SIO232 PFM.

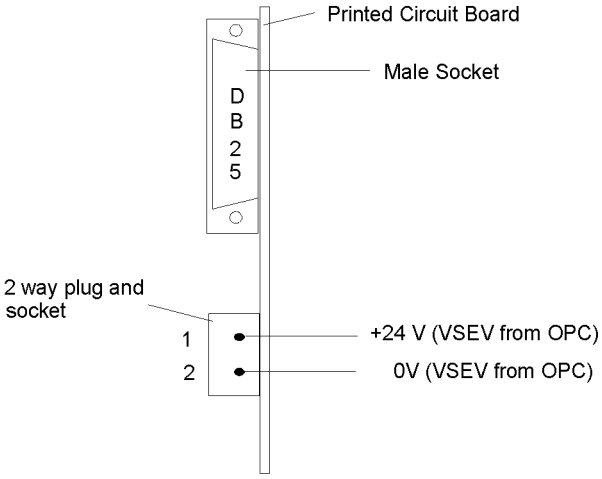

Figure A.20: External Connections—SIO232 PFM—VTC

Pin	Function
1	Chassis Ground
2	Transmit Data (TxD)
3	Receive Data (RxD)
4	Request to Send (RTS)

Table A19: DB25 Pinout—SIO232 PFM—VTC

Pin	Function
5	Clear to Send (CTS)
7	Signal Ground (GND)
8	Data Carrier Detect (DCD)
17	Receive Clock (RXC)
20	Data Terminal Ready (DTR)
24	Transmit Clock (TXC)

Table A19: DB25 Pinout—SIO232 PFM—VTC ***(Continued)***

This module communicates using RS232-C and is configured as a DTE.

A.9 Enhanced Vital Telemetry Continuous Module (EVTC)

A.9.1 Description

The EVTC enables vital data communication between two WESTRACE installations by providing continuous data transfer between the installations.

Note: ***The EVTC does not work with VLM1.***

A.9.2 Particulars

The EVTC comprises a single printed circuit board.

It communicates using RS232-C and is configured as a DTE.

The address of the module is defined in the Application Data for the system, held in PROMs on the VLM.

A.9.3 Function

The EVTC continuously transmits data over a dedicated serial channel to another EVTC.

Two forms of the data are transmitted; the True and Complement representations of the data. These messages are formed into code words, and the two code words are transmitted separately over the serial channel.

If in any two second period either EVTC fails to receive a correct “pair of code words” from the serial channel, it will indicate a “Loss of Input Channel” (LOIC) status to the HVLM by setting LOIC to logic state 0. This status will remain until the EVTC receives a correct pair of code words.

When LOIC is set to logic state 0, the VLM ensures that all inputs derived from the EVTC message are set to logic state 0 to ensure safety. All data received from the EVTC during this period is ignored, and will remain so until the LOIC status is set to logic state 1 by the receipt of valid code words.

The EVTC derives power for its communication circuits from an external 24 Vdc supply, generated by the OPC (as part of the VLM). This supply is known as the Vital Serial Enable Voltage (VSEV). Removal of this voltage positively prevents the EVTC from transmitting and receiving data. This is done when the VLM cannot assure the integrity of the data and hence the safety of the system under failure conditions. Removal of the VSEV occurs simultaneously with de-energising of the OPCR.

The EVTC is processor based and it interfaces with the VLM. The processor performs self-testing, housekeeping and Health Monitoring functions for the module.

Note: ***Do not connect the signal ground line to earth, as this may result in an unsafe condition though the introduction of earth loops and induced earth potentials.***

A.9.4 Configuration

Transmit Clock

Many PCM systems require Tx and Rx data to be synchronised with the PCM's own transmit clock.

Set the Transmit Clock switch thus:

Switch Position 1 = OFF	Internal clock—used when EVTC is connected a modem.
Switch Position 1 = ON	External clock—used when interfacing to carrier communication systems that require synchronised clocks for both transmitted and received data. The EVTC takes an external receive data clock and generates both the transmit data clock and the transmit data from it. Applies to EVTC module (3650 1129 13) Issue 2.0 or later.

A.9.5 Indications

A.9.5.1 Start Up

Diagnostic LEDs display the module type code, shortly followed by a firmware version code (reflecting the firmware version installed in the module). The firmware version is displayed for approximately 8 seconds, after which all diagnostic LEDs will extinguish.

A.9.5.2 Operation

The module will commence flashing the green watchdog LED to indicate the module is operational and working correctly.

A.9.5.3 Fault Codes

CODE(H)	FAULT DESCRIPTION	ACTION
00	No Fault	Not a fault
01	Second Negation Error	Indicates a fault on other modules.
02	Module Type Error	Replace EVTC
03	EPROM Checksum Error	"
04	Stack Guard Error	"
05	RAM Error	"
06	Interrupt Error	"
07	Termination Error	"
08	Processor Error	"
09	Stack Error	"
0A	Run Time Error A	"
0B	Run Time Error B	"
0C	Run Time Error C	"
0D	Run Time Error D	"
0E	Run Time Error E	"
0F	Run Time Error F	"
10	Run Time Error G	"
11	Run Time Error H:	"
12	Run Time Error I	"
13	Run Time Error J	"
14	Run Time Error K	"
15	Run Time Error L	"
16	Run Time Error M	"
17	Run Time Error N	"
18	Run Time Error O	"
19	Run Time Error P	"
1A	Run Time Error Q	"
1B	Run Time Error R	"
1C	Run Time Error S	"
1D	Run Time Error T	"
1E	Run Time Error U	"
1F	Run Time Error V	"
20	Run Time Error W	"

Table A20: Fault Codes—EVTC

CODE(H)	FAULT DESCRIPTION	ACTION
21	Run Time Error X	Replace EVTC
22	Run Time Error Y	"
23	Run Time Error Z	"
24	IMB Timeout Error	"
25	IMB Address Error	"
26	IMB Address Parity Error	"
27	IMB CI Transfer Error	"
28	IMB Transfer Type Error	"
29	IMB Message Length Error	"
2A	IMB True Byte Error	"
2B	IMB Check Message Error	"
2C	IMB Inconsistency Error	"
2D	Health Monitoring Time Error	Indicates fault in another module
2E	Health Monitoring Health Error	"
2F	Health Monitoring Scheduling Error	Replace EVTC
30	Module Type and Fault Code Error	"
31	ST IMB Start Up Timeout	"
32	ST IMB Too Few IMB Calls	"
33	ST IMB Too Many IMB Calls	"
34	ST IMB Too Few ST Calls	"
80	True IMB Parity Error	"
81	Comp IMB Parity Error	"
97	Hardware Timer Error	"
98	Corrupt Data or Operating Error	"
99	Corrupt Data Input	"
9A	Primary Loc Error	"
9B	Corrupt Data or Transmit Error	"
9C	Insufficient Time Lapse	"
9D	True Output Parity Check Error	"
9E	Comp Output Parity Check Error	"

Table A20: Fault Codes—EVTC ***(Continued)***

A.9.6 External Connections

External Connections to the EVTC are made via the SIO232 PFM.

The SIO232 PFM External Connectors are a DB25 plug and socket for RS232 interface, and a 2 way plug and socket Klippon type BLA/SLA for power.

Figure A.21 depicts the external connection details of the SIO232 PFM.

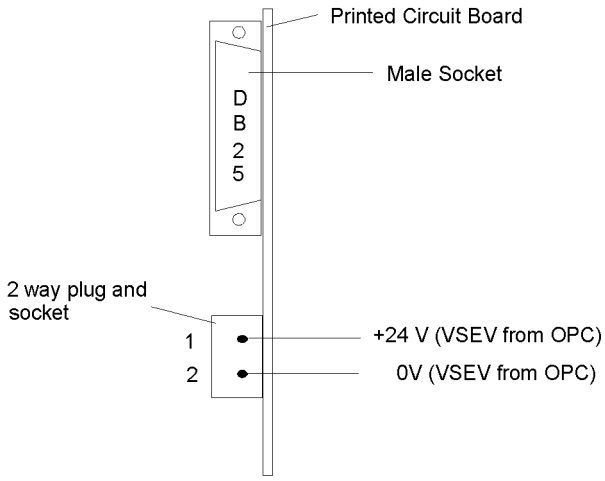

Figure A.21: External Connections—SIO232 PFM—EVTC

Pin	Function
1	Chassis Ground
2	Transmit Data (TxD)
3	Receive Data (RxD)
4	Request to Send (RTS)
5	Clear to Send (CTS)
7	Signal Ground (GND)
8	Data Carrier Detect (DCD)
17	Receive Clock (RXC)
20	Data Terminal Ready (DTR)
24	Transmit Clock (TXC)

Table A21: DB25 Pinout—SIO232 PFM—EVTC

This module communicates using RS232-C and is configured as a DTE.

A.10 WESTECT Communications Module (WCM)

A.10.1 Description

The WCM enables communication of vital signal status information from a WESTECT encoder to WESTECT OBC equipment located on a train.

A.10.2 Particulars

The WCM comprises a single printed circuit board.

It communicates using RS232-C and is configured as a DTE.

A.10.3 Function

The WCM continuously transmits data over a dedicated serial link to track side radio communications equipment as used in the WESTECT ATP system.

Two forms of data are transmitted; the True and Complement representations of the data. These messages are formed into one packet of code words, and the packet is transmitted over the serial channel.

The WCM derives power for its communication circuits from an external 24 Vdc supply, generated by the OPC (as part of the VLM). This supply is known as the Vital Serial Enable Voltage (VSEV). Removal of this voltage positively prevents the WCM from transmitting data. This is done when the VLM cannot assure the integrity of the data and hence the safety of the system under failure conditions. Removal of the VSEV occurs simultaneously with de-energising of the OPCR.

The WCM is processor based and it interfaces with the VLM. It performs the self-testing, housekeeping and Health Monitoring functions for the module.

Note: ***Do not connect the signal ground line to earth, as this may result in an unsafe condition though the introduction of earth loops and induced earth potentials.***

A.10.4 Configuration

None.

A.10.5 Indications

A.10.5.1 Start Up

Diagnostic LEDs display the module type code, shortly followed by a firmware version code (reflecting the firmware version installed in the module). The firmware version is displayed for approximately 8 seconds, after which all diagnostic LEDs will extinguish.

A.10.5.2 Operation

The module will commence flashing the green watchdog LED to indicate the module is operational and working correctly.

A.10.5.3 Fault Codes

CODE(H)	FAULT DESCRIPTION	ACTION
00	No Fault	Not a fault
01	Second Negation Error	Indicates a fault on other modules.
02	Module Type Error	Replace WCM
03	EPROM Checksum Error	"
04	Stack Guard Error	"
05	RAM Error	"
06	Interrupt Error	"
07	Termination Error	"
08	Processor Error	"
09	Stack Error	"
0A	Run Time Error A	"
0B	Run Time Error B	"
0C	Run Time Error C	"
0D	Run Time Error D	"
0E	Run Time Error E	"
0F	Run Time Error F	"
10	Run Time Error G	"
11	Run Time Error H:	"
12	Run Time Error I	"
13	Run Time Error J	"
14	Run Time Error K	"
15	Run Time Error L	"
16	Run Time Error M	"
17	Run Time Error N	Replace WCM
18	Run Time Error O	"

Table A22: Fault Codes—WCM

CODE(H)	FAULT DESCRIPTION	ACTION
19	Run Time Error P	"
1A	Run Time Error Q	"
1B	Run Time Error R	"
1C	Run Time Error S	"
1D	Run Time Error T	"
1E	Run Time Error U	"
1F	Run Time Error V	"
20	Run Time Error W	"
21	Run Time Error X	"
22	Run Time Error Y	"
23	Run Time Error Z	"
24	IMB Timeout Error	"
25	IMB Address Error	"
26	IMB Address Parity Error	"
27	IMB CI Transfer Error	"
28	IMB Transfer Type Error	"
29	IMB Message Length Error	"
2A	IMB True Byte Error	"
2B	IMB Check Message Error	"
2C	IMB Inconsistency Error	"
2D	Health Monitoring Time Error	Indicates fault in another module
2E	Health Monitoring Health Error	"
2F	Health Monitoring Scheduling Error	Replace WCM
30	Module Type and Fault Code Error	"
31	ST IMB Start Up Timeout	"
32	ST IMB Too Few IMB Calls	"
33	ST IMB Too Many IMB Calls	"
34	ST IMB Too Few ST Calls	"
81	Codeword True Order Error	"
82	Codeword Complement Order Error	"
83	Codeword Pair Time Error	"
84	Complement Data Parity Error	"
85	True Data Parity Error	Replace WCM
86	Codeword Count Error	"

Table A22: Fault Codes—WCM *(Continued)*

A.10.6 External Connections

External Connections to the WCM are made via the SIO232 PFM.

The SIO232 PFM External Connectors are a DB25 plug and socket for RS232 interface, and a 2 way plug and socket Klippon type BLA/SLA for power.

Figure A.22 depicts the external connection details of the SIO232 PFM.

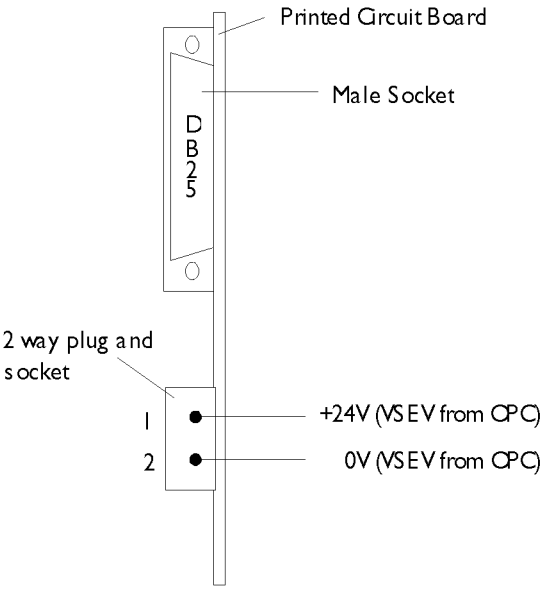

Figure A.22: External Connections—SIO232 PFM—WCM

Pin	Function
1	Chassis Ground
2	Transmit Data (TxD)
3	Receive Data (RxD)
4	Request to Send (RTS)
5	Clear to Send (CTS)
7	Signal Ground (GND)
8	Data Carrier Detect (DCD)
17	Receive Clock (RXC)
20	Data Terminal Ready (DTR)
24	Transmit Clock (TXC)

Table A23: DB25 Pinout—SIO232 PFM—WCM

This module communicates using RS232-C and is configured as a DTE.

A.11 Network Communication Diagnostic Module (NCDM)

A.11.1 Description

The NCDM module provides network and serial interfaces, non-vital logic processing and data logging of time stamped vital and non-vital logic changes and WESTRACE system faults. It may be used as part of a WESTRACE system or as a stand-alone communication and logic processing module.

It has one network port and two external serial ports. The network port and external serial ports are configured for function and communication protocol by the Non-vital Configuration that is downloaded into non-volatile memory on the module. The physical interface for each external serial port (RS232 or RS485) is configured as part of the communication protocol in the Non-vital Configuration.

The network can be used for a diagnostic interface. This uses the Diagnostic Protocol and is connected to MoviolaW or NGETLOG.

The serial ports can be used for a diagnostic interface. These use the Diagnostic Protocol and are connected directly or through a modem to MoviolaW or GetLOG. Software packages designed for earlier WESTRACE diagnostic modules (eg DM or DM128) will not work with NCDM.

A maximum of five Diagnostic Protocol (network or serial) Communication Sessions are supported by the NCDM.

The network port can be used for a control system interface. This uses the S2 protocols (WSL or WSA). The WSA/S2 protocol can be configured to operate as a master (client) or slave (server). The NCDM can support up to 16 network sessions for control systems.

The network port can route vital communication between VLM6 modules. The NCDM can support up to 16 vital communication sessions.

The external serial ports can be used for a control system interface. These use the S2 protocols (WSL or WSA) and may be configured to emulate a WSA or WSL S2 field station or a WSA S2 office. Typically, these ports are connected to a local control system (eg WESTCAD), a remote CTC system or an S2 based local panel. The external serial ports can be configured for connection to redundant bearers for external communications availability.

The NCDM has one internal serial port (Production port) available for commissioning purposes to configure the NCDM and upload vital and non-vital configuration data.

Only one NCDM module may be installed in a WESTRACE system. It occupies the slot adjacent to the VLM in housing 1.

Note: ***GCSS v6.0 supports the configuration of NCDM with VLM6 only.***

The term 'Non-vital Configuration' equates to 'CED' in older WESTRACE technology.

A.11.2 Particulars

A.11.2.1 Circuit Boards

The NCDM comprises:

- the main circuit board (NCDC);
- the Network Communication Diagnostic Protection and Filter Module (NCD PFM[1]), which is the PFM for the NCDM.

The NCD PFM supports:

- one 10baseT Ethernet interface, type RJ45;
- two configurable serial ports, RS232-C or RS485 signal level (DB9);
- INCL.

A.11.2.2 External Ports

Table A24 shows how port numbers are allocated. Figure A.23 illustrates the physical port connectors at the rear of the NCD PFM.

Configuration Port No:	Type	Used For
2	Serial 2	Diagnostic or control system connection
3	Serial 3	"
8	IMB	The IMB interface to the VLM (internal)
9	INCL	Inter NCDM Communication Link (Hot Standby)
A	VLM6	Dedicated interface to the VLM6 (internal)
B	Network	Diagnostic, control system or vital communications

Table A24: Port Number Allocation—NCDM

1. There are two styles of NCD PFM—see figure A.23.

Style 1: NCD PFM

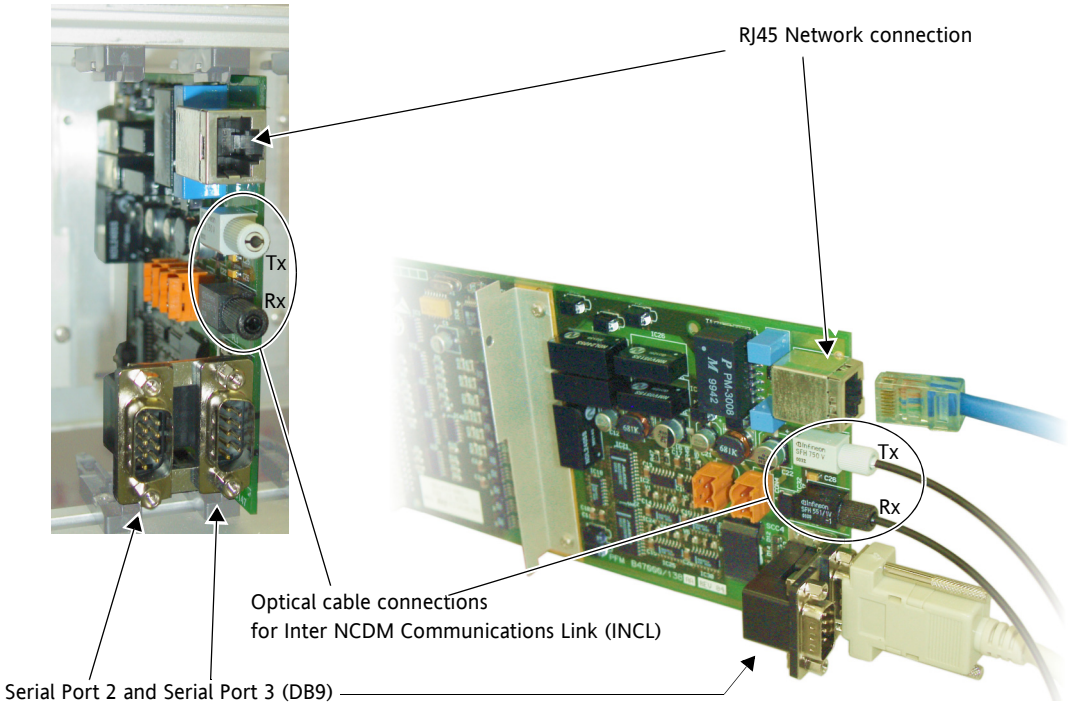

Style 2: NCDC PFM

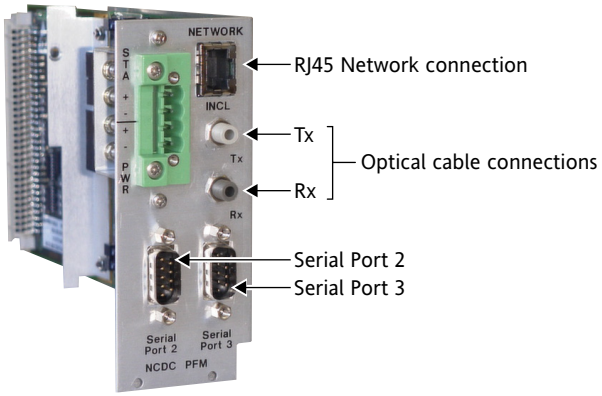

Figure A.23: External Ports on the Two Styles of NCD PFM—NCDM

A.11.2.3 Serial Control System Ports or Network Control System Sessions

Each serial control system port or network control system session can be connected to:

- a control centre;
- a control computer;
- S2 field stations (serial port only);
- WESTRACE Installations (for WESTRACE to WESTRACE non-vital communication).

Network control system sessions are made over a 10 BaseT Ethernet compliant network.

Serial control system connections can be direct through a permanently connected modem or as a duplicated communication pair.

Network Control System Session

Each network control system can be configured as either:

- a slave (server) where the NCDM may be configured with the WSA/S2 or WSL/S2;
- a master (client) where the NCDM may be configured with the WSA/S2.

Individual network control sessions are configured with an individual session ID and an individual S2 address within the S2 address range. At least 16 network control system sessions are supported.

Serial Control System Port

Each Serial Control System port can be configured as either:

- a *slave*, where the NCDM operates as a WSA/S2 or WSL/S2 field station;
- a *master*, where the NCDM operates as a WSA/S2 office.

Serial control ports can appear in a range of S2 addresses.

A.11.2.4 Serial Diagnostic Ports or Network Diagnostic Sessions

Up to five diagnostic communication sessions can be supported by NCDM. These may be a combination of serial diagnostic or network diagnostic sessions.

Network Diagnostic Sessions

Each network diagnostic session operates as an intermittent network connection, where the session is connected to the external diagnostic equipment (eg MoviolaW) only when required.

No fault is logged if the session is logged off, however a fault will be logged if this connection fails while the session is logged on.

Serial Diagnostic Ports

Each serial diagnostic port can be configured as:

a) a permanent direct connection, where the port is connected directly to the external diagnostic equipment (eg MoviolaW).

   A fault will be logged if this connection fails.

b) an intermittent connection, where the port is connected to the external diagnostic equipment only when required.

   No fault will be logged.

c) a dial-in connection, where the port is connected to a Hayes compatible modem. Remote external diagnostic equipment can dial in and interrogate the NCDM.

d) a dial-out connection, where dial-in is not possible, but the NCDM will initiate a dial-out to remote external diagnostic equipment in the event of a fault.

e) a dial-in/out connection which allows both dial-in and dial-out.

For options c), d), and e), a fault will *not* be logged if the external diagnostic equipment hangs up, but will be logged if the NCDM cannot communicate with the modem.

A.11.2.5 Production Port

The Production port is on the front of the module. This port is used for downloading the Non-vital Configuration from the GCSS and uploading the Non-vital Configuration and Vital PROM Data to the ICS.

A.11.2.6 Serial Power Supply

The NCDM derives operational power for its serial communication ports from a separate isolated power supply. The isolated power supply input is connected to the installation 24V power supply by the connector CON3. The ports are disabled when this power is not present.

A.11.2.7 Installation Status

The NCDM derives an indication of the status of the installation from an OPCR switched 24 V input.

The installation status input is connected to the installations switched 24V signal by CON4.

The installation status is only used by the NCDM when configured to operate in a hot standby system.

A.11.3 Function

The main functions of the NCDM are:

- Evaluate non-vital logic;
- Route vital communication messages from the associated VLM6 to other WESTRACE installations and from other WESTRACE installations to the associated VLM6;
- Exchange configured non-vital logic states with control centres, control computers, other WESTRACE installations, external WSA/S2 field stations and the vital processor (HVLM128, VLM5 or VLM6);
- Log all changes to vital and non-vital logic states, all detected WESTRACE system faults and other significant operational occurrences (known as ‘operations’);

  The NCDM can store up to 250,000 change of state events, 200 system faults and 100 operations in non-volatile RAM (NVRAM);

  The logging capacity is 3 days for a small interlocking without an external diagnostic system connected, or 6 hours for a large interlocking without an external diagnostic system connected;

  The NCDM has its own Real Time Clock for time and date stamping

of logged events, WESTRACE system faults and operations. The time and date can be set from a control centre or through a diagnostic port;

- Allow an external diagnostic system such as MoviolaW to extract logged data and view current logic states;
- Allow an external system to upload the Non-vital Configuration data or Vital PROM Data.

Timestamp Synchronisation

Where a system consists of more than one WESTRACE installation, it is important that the time of day in each installation is the same so that their events can be correlated by time.

A typical real time clock will drift by 2 seconds a day, so two installations may drift apart by 4 seconds a day (24 minutes over 12 months).

To ensure time synchronisation of a system consisting of more than one WESTRACE installation, an external diagnostic system should be used to synchronise the installation's clocks by sending regular 'set time' commands.

A.11.4 Operation

The NCDM has four operating modes:

Mode	Description	Indications
Normal	Normal operation.	Watchdog LED flashes: • **green** for stand-alone or on-line operation; • **orange** for standby operation.
Maintenance	Used for downloading a new Non-vital Configuration.	Watchdog LED flashes **red**. Display shows 'Mnt '
Production	Used for downloading new software.	Watchdog LED **Off**. Display shows 'Prd '.
Shutdown	NCDM has shutdown because of a fatal internal fault.	Watchdog LED not flashing. Display shows a 3-digit fault code.

Table A25: Operating Modes—NCDM

Unless otherwise specified, the functionality described here relates to Normal mode only.

A.11.4.1 Selecting Maintenance Mode

Maintenance mode is manually selected by either:

- connecting a special 'Maintenance' cable to the Production port and then restarting the NCDM. See section A.11.7.7 for details, or;
- setting one of the on-board switches, then restarting the NCDM (see "SW2 Switch Bank" on page A-100.)

A.11.4.2 Selecting Production Mode

Production mode is selected either:

- automatically, if the NCDM software is detected as being invalid, or;
- manually, using the on-board jumpers on a Mod D Rev 7 NCDC or a pushbutton on a Mod E Rev 8 NCDC, then restarting the NCDM (see "PROD" on page A-99).

A.11.5 Configuration

The NCDC is the NCDM's main circuit board. Two styles of NCDC are available:

- Mod D Rev 7 NCDC (figure A.24)—set modes using jumper pins
- Mod E Rev 8 NCDC (figure A.25)—set modes using pushbuttons

A.11.5.1 Hardware Settings

Figure A.24 shows the switch banks and jumpers used to configure the Mod D Rev 7 NCDC. Number 1 switch or jumper pin is indicated by a small triangle symbol.

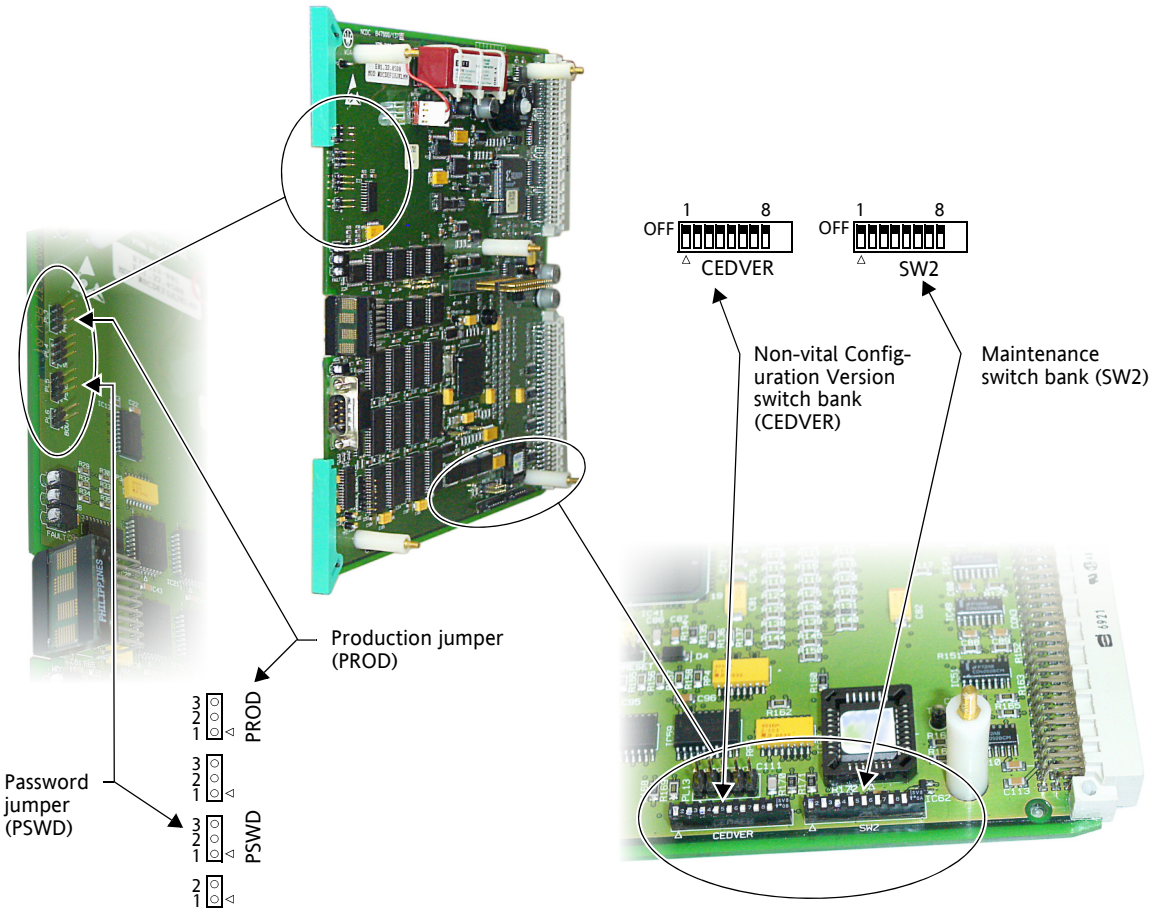

Figure A.24: Configuration Switches and Jumpers—Mod D Rev 7 NCDC

Figure A.25 shows the switch banks and pushbuttons used to configure the Mod E Rev 8 NCDC.

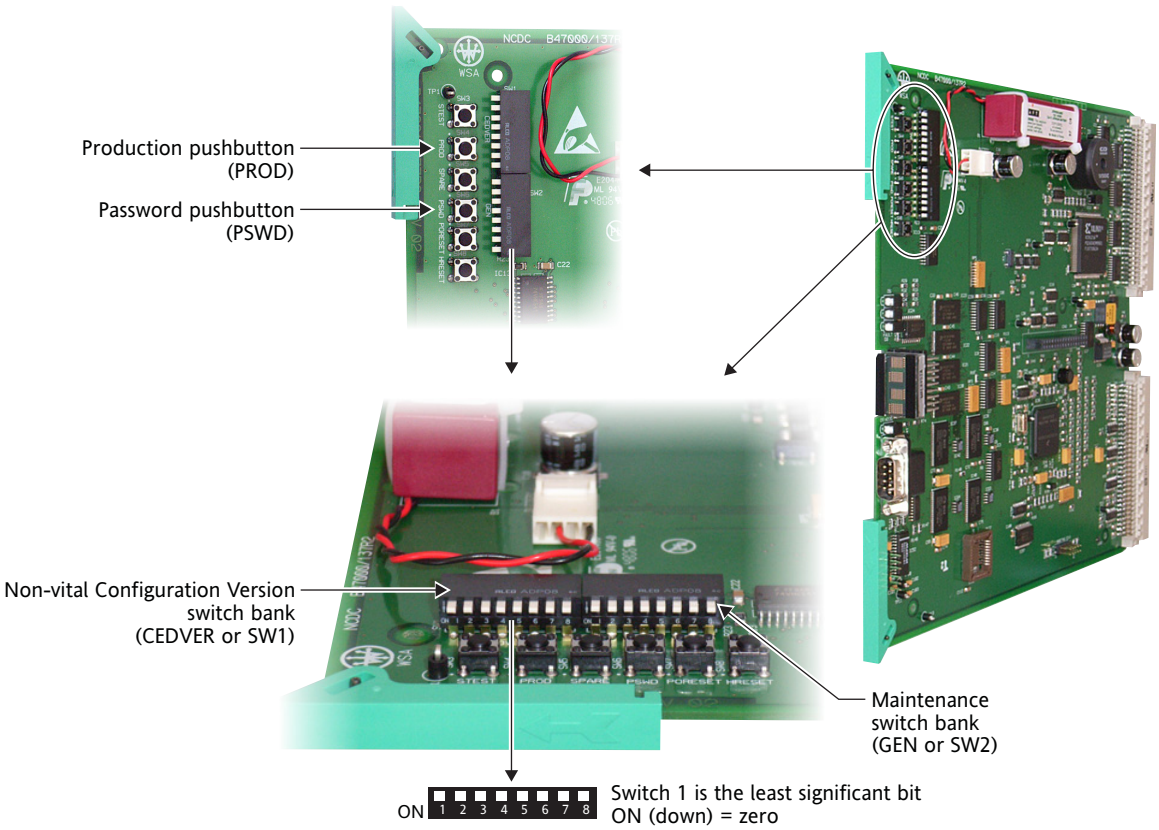

Figure A.25: Configuration Switches and Pushbuttons—Mod E Rev 8 NCDC

Jumpers and Pushbuttons

PROD

To enter Production mode:

- short pins 1 & 2 of the PROD jumper—Mod D Rev 7 NCDC, or
- hold the PROD pushbutton down—Mod E Rev 8 NCDC

while restarting the NCDM.

PSWD

You can change the Diagnostic Mode passwords during operation of the NCDM. To reset them to the values stored in the Non-vital Configuration:

- short pins 1 & 2 of the PSWD jumper—Mod D Rev 7 NCDC, or
- hold the PROD pushbutton down—Mod E Rev 8 NCDC

while restarting the NCDM.

Note: ***Mod D Rev 7 NCDC only: Store the PROD and PSWD jumpers on pins 2 and 3 when the modes are not set.***

Switches

CEDVER Switch Bank

The NCDM uses the version number set by the CEDVER switch bank to ensure that the correct Non-vital Configuration is stored in PROM. Switch 1 is the least significant bit and switch ON is zero.

Note: ***CED version is hex coded on the switch bank.***

SW2 Switch Bank[2]

This switch bank is used for the following purposes:

- putting the NCDM into Maintenance mode;
- setting the data transfer rate for the Production port;
- setting the IP Address used in a hot standby system.

Set the switches according to table A26 and restart the NCDM to activate the desired configuration.

Switch	Setting
1	OFF for Normal mode ON to select Maintenance Mode
2	OFF for 9600 bits per second ON for 115200 bits per second
3	OFF for Secondary IP address ON for Primary IP Address (hot standby system only)
4–8	Not used. Normally left in the **Off** position.

Table A26: Switch Bank 2—Valid Settings—NCDM

The NCDM will stay in Maintenance mode until switch 1 is returned to OFF and the system is rebooted.

A.11.5.2 Non-vital Configuration

The majority of the NCDM configuration is done using the GCSS and is stored in the Non-vital Configuration data.

The Non-vital Configuration includes:

- default passwords;
- initial values for non-vital logic states;
- non-vital application logic and timer details;
- Configuration details for each serial port, such as:
  - protocol;
  - basic serial parameters (eg data transfer rate, handshaking, RS 232c or RS 485 signal level);

2. Also labelled GEN on Mod E Rev 8 NCDCs (Figure A.25)

  - clock signal usage (input, output or reconstructed from data);
  - protocol parameters (eg data word length, addresses, inter-scan delay);
  - default dial-out telephone numbers (diagnostic ports only);
  - I/O bit mappings (control system ports only);
- Configuration details for each network session, such as:
  - session ID;
  - protocol;
  - protocol parameters;
  - I/O bit mappings (control system sessions only).

A.11.5.3 Replacing the NCDM

A replacement NCDM must be configured to suit the particular location. Usually this means the replacement must be configured to exactly match the NCDM being replaced.

Before beginning, you must:

a) Obtain permission from the Signaller and adhere to the railway authority's safety requirements

b) Power down the WESTRACE installation.

Remove the NCDM from the WESTRACE Housing

a) Remove the front panel of the WESTRACE housing.

b) Observe the anti-static procedures.

c) Remove the NCDM from the housing using the built in card ejectors.

Where the NCDM is used in a WESTRACE system that includes a VLM6, both the NCDM and VLM6 must be removed.

d) Separate the NCDC from the VLC6.

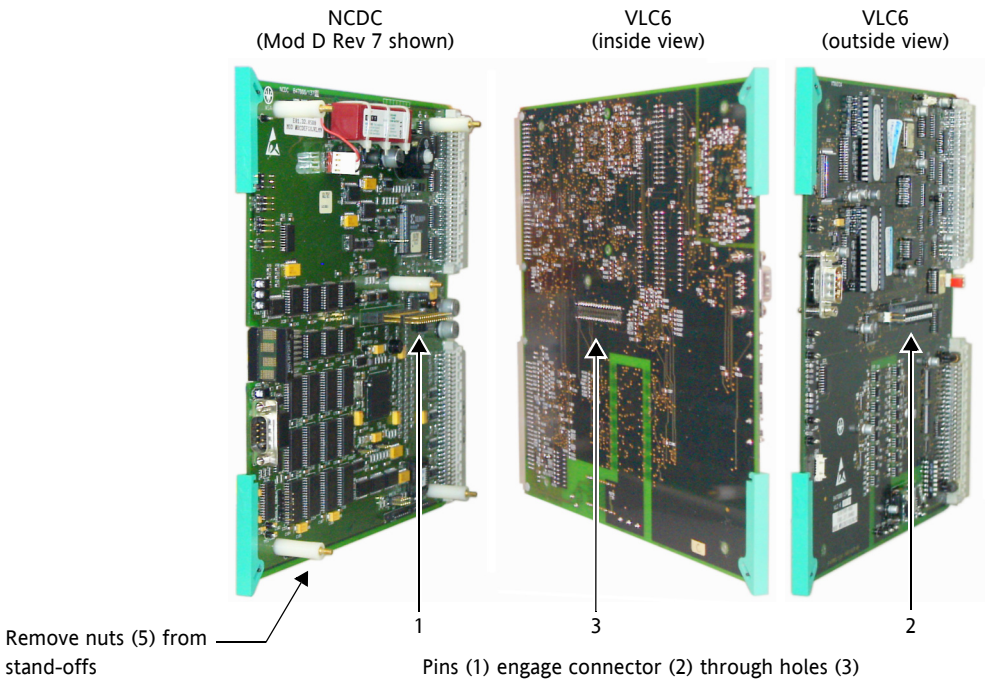

Figure A.26: Separating the NCDC and VLC6

Install the Non-vital Configuration

There are five parts to this task:

a) Ensuring you have the right equipment;

b) Setting the Non-vital Configuration version switches on the NCDC;

c) Switching the NCDM to Maintenance Mode;

d) Installing the NCDM into the housing;

e) Down loading the new Non-vital Configuration to the NCDM.

SAFETY
WARNING

WESTRACE must not be controlling an interlocking while down-loading a Non-vital Configuration.

Disconnect the network cable from the NCD PFM prior to power-up of a newly-installed NCDM. Otherwise an unintended IP Address in the NCDM Non-vital Configuration may cause a shutdown of an adjacent NCDM on the network due to detection of a duplicated IP Address.

Equipment Required

- A personal computer (PC) loaded with:
  - the Graphical Configuration Subsystem (GCSS version 6 or later);
  - the correct Non-vital Configuration for the NCDM;
  - the Installation Check System (ICS).
- A ‘standard’ cable as described in figure A.37 to connect the serial

port on the PC to the Production port on the NCDC.

Alternatively, a 'maintenance' cable (figure A.37) may be used. The 'maintenance' cable configuration causes the NCDM to automatically start in 'Maintenance' mode. See "Setting the Maintenance Mode" (page A-103) and "When the maintenance cable was used to set Maintenance Mode" (page A-105).

- A copy of the WESTRACE Graphical Configuration Subsystem Manual.

Setting Non-vital Configuration version switches

The NCDM requires that the Non-vital Configuration version must be that set by the CEDVER switches. This protects against loading an incorrect version. See figure A.27.

Note: ***CED version is hex coded on the CEDVER switch bank.***

Set the switches on the NCDC to define the Non-vital Configuration version specified on the GCSS printout for the Non-vital Configuration.

Switch 1 is the least significant bit. Switch ON is zero.

For example, to set Non-vital Configuration version 1, you set switch 1 OFF and switches 2-8 ON (figure A.27). To set Non-vital Configuration version 5, switches 1 and 3 are OFF, all others are ON.

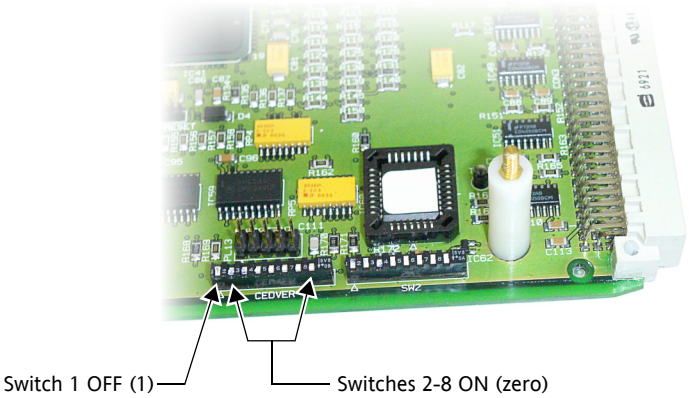

Figure A.27: Setting Non-vital Configuration—Version 1 Example (Mod D Rev 7 NCDC shown)

Setting the Maintenance Mode

Select 'Maintenance mode' either by connecting a maintenance cable to the Production port, or by setting switch 1 of switch bank SW2 to ON. See section A.11.4.1 for details.

Refitting the NCDM

Refit the NCDM into the housing. Insertion is the reverse of removal described in “Remove the NCDC from the WESTRACE Housing” (page A-101) with the exception of not replacing the front panel.

Downloading the Non-vital Configuration

a) Connect the cable of choice between the Production port and the PC; see figure A.28.

b) Power up WESTRACE.

   Ensure that the NCDM has entered Maintenance mode (the watchdog LED should be flashing red and the fault display should show ‘MNT ’).

c) Download the Non-vital Configuration according to the instructions in the WESTRACE Graphical Configuration Subsystem Manual.

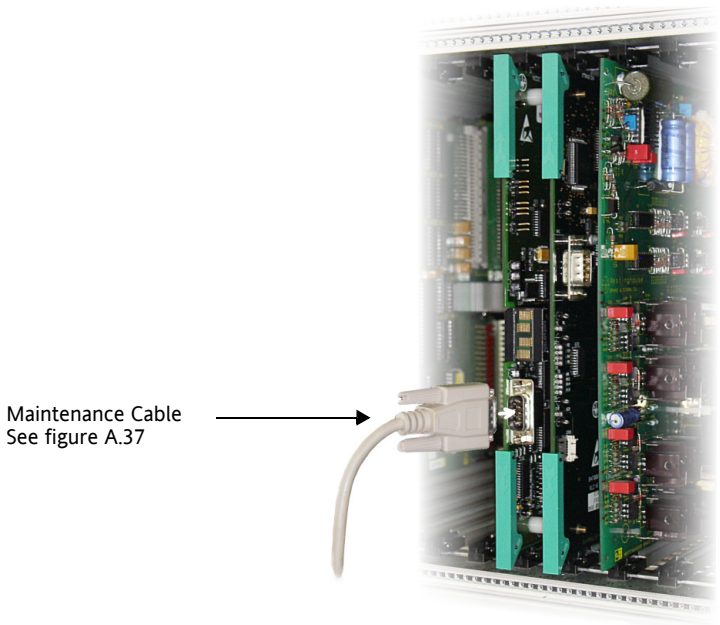

Figure A.28: Production Port—Connecting—NCDM

Verify the Data

The Non-vital Configuration must be verified before the system is returned to service.

a) Ensure the NCDM is in maintenance mode and the PC is connected to the NCDM Production port;

b) Run ICS according to the instructions in the WESTRACE Installation Check System Manual;

c) Complete procedural checking and sign off as per the WESTRACE Installation Check System Manual.

Restore the System

When the maintenance cable was used to set Maintenance Mode

a) Power down WESTRACE;

b) Remove the cable from the Production port;

c) Refit the front panel to the housing(s);

d) Power up WESTRACE;

e) Allow WESTRACE to run for several minutes; ensure that no fault codes are displayed;

f) Advise the Signaller of completion.

When Switch Bank SW2 was used to set Maintenance Mode

a) Power down WESTRACE.

b) Remove the NCDM from the housing.

c) Set switch 1 of switch bank SW2 to OFF (Maintenance Mode OFF). See figure A.24 or A.25.

d) Refit the NCDM into the housing. Replacement of the NCDM is the reverse of the procedure described in "Remove the NCDC from the WESTRACE Housing" (page A-101).

e) Refit the front panel to the housing(s).

f) Power up WESTRACE.

g) Allow WESTRACE to run for several minutes; ensure that no fault codes are displayed.

h) Advise the Signaller of completion

A.11.5.4 Battery Installation

A lithium battery is used to maintain logged data in non-volatile memory and the real-time clock when the NCDM is powered down. The battery has a very long life and in normal circumstances it is unlikely to require replacement. The NCDM is usually shipped with the battery connected.

To replace the battery:

a) Have a replacement battery of the same type as the original plus cable ties readily at hand. See figure A.29.

b) Snip the cable ties holding the old battery to the printed circuit board.

c) Remove the battery lead from the pins.

For a standing battery connector (figure A.29), first separate the two circuit boards by removing the five stand-off screws then releasing the connector near the centre of the boards (figure A.26).

d) Connect the replacement battery to the pins. You have a short period to do this before data is lost.

e) Fix the replacement battery to the circuit board using the new cable ties.

f) Snip off the excess length of cable ties.

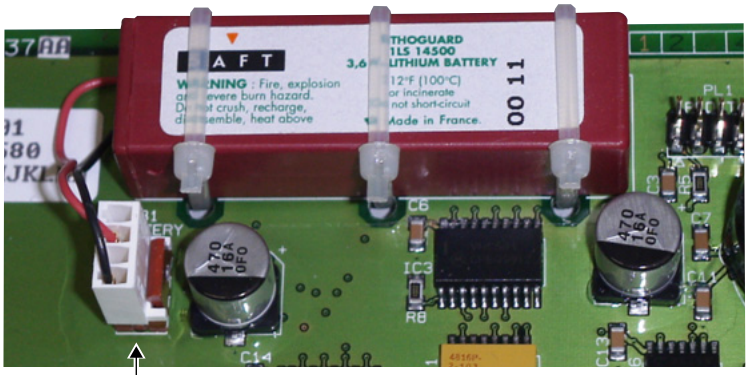

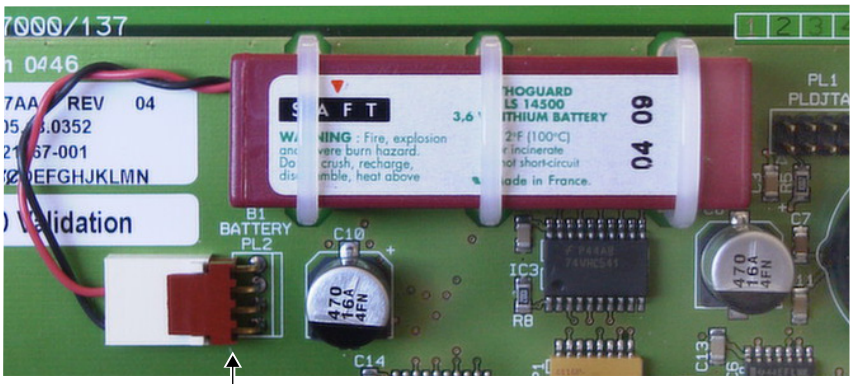

Figure A.29: Lithium Battery—Two Connector Types—NCDM

Handling Lithium Batteries

Observe the instructions elsewhere in this manual.

A.11.6 Indications

The ‘user interface’ of the NCDM comprises LEDs and a four digit alphanumeric display.

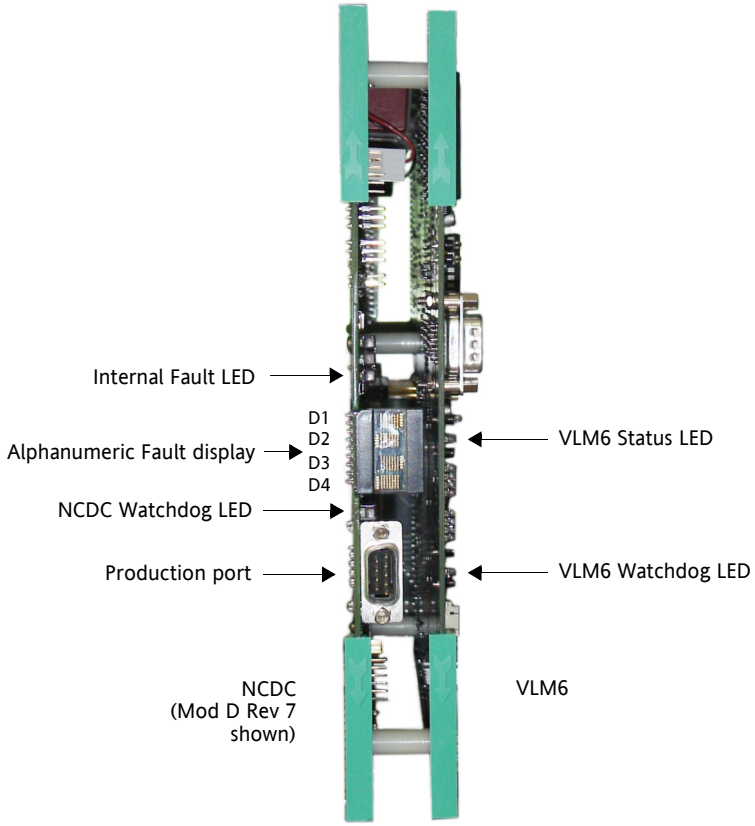

Figure A.30: User Interface—NCDC and VLM6—NCDM

A.11.6.1 Network Communication Diagnostic Card LEDs

The NCDC has two front panel LEDs:

- *Internal fault LED* (red)—illuminated whenever there is a non-fatal internal NCDM fault. These faults require attention, but are not serious enough to cause the NCDM to shutdown;
- *Watch dog LED* (normally green)—flashes at a regular interval if all is well with the NCDM. During the first minute or so of operation, the LED may flash at a faster than normal rate. It should then flash at a similar rate as the watchdog LED on the VLM;

  This LED flashes:

  - *orange* when the NCDM is in the Standby Installation of a Hot Standby System;
  - *red* when the NCDM is in Maintenance mode.

A.11.6.2 NCD PFM LEDs

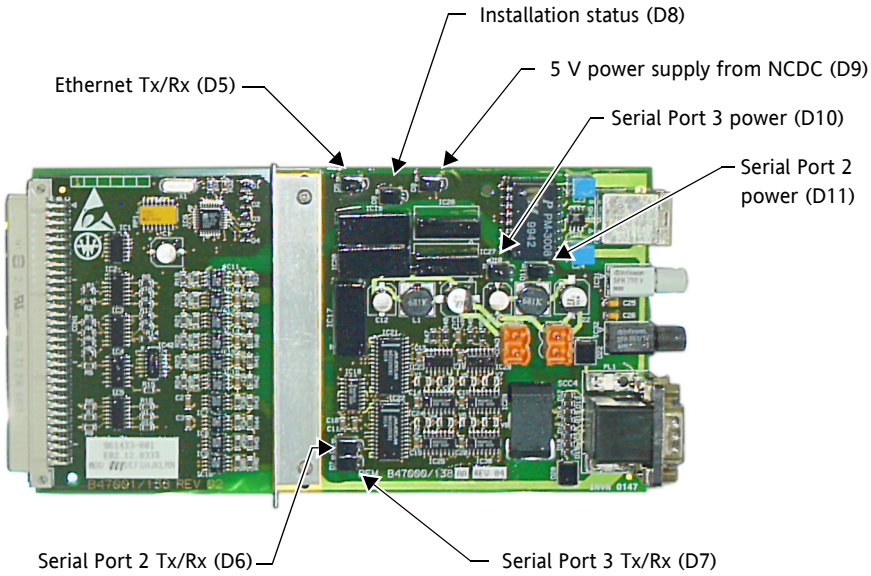

Figure A.31: User Interface—NCD PFM—NCDM

The NCD PFM has 7 LEDs:

- *Serial LED (D6 & D7)*—for each of the 2 serial ports. Flashes red when data is transmitted and flashes green when data is received;
- *Network LED (D5)*—for the network port. Flashes red when data is transmitted and flashes green when data is received;
- *Power Indicator LED (D10 & D11)* (green)—for each of the serial ports. Indicates the +24 V comms power supply is present;
- *Power Indicator LED (D9)* (green)—indicates the +5 V power supply is present;
- *Installation Status LED (D8)* (green)—indicates the NCDM is in the on-line installation.

See section A.11.6.5 for further information about these indicators.

A.11.6.3 Alphanumeric Display

The alphanumeric display can only show one fault at any time. However, all fault codes which occur are logged by the NCDM and can be examined using external diagnostic equipment.

Shutdown Mode

The alphanumeric display will show the applicable fault code if the NCDM shuts down because of an internal fault. See table A34.

Normal Mode

Within the first 12 seconds of the NCDM operating in this mode, the alphanumeric display will show start-up information (see section A.11.6.4) and then it will be blank unless a fault is detected.

During operation, a 'non-fatal' fault may occur which will cause the NCDM to display a fault code but continue to operate. In the event of multiple faults being present simultaneously, the NCDM will display the code for the first of the following that applies:

a) 'TIME' if the NCDM real time clock has not been set;

b) a non-fatal NCDM fault code, see table A35;

c) 'FLT 'when more than one non-fatal faults have occurred;

d) 'DIAG' when one or more WESTRACE system faults have not been uploaded by the external diagnostic equipment;

e) 'BAT ' if the NCDM battery voltage is low.

Maintenance Mode

The alphanumeric display will show the following when the NCDM is in this mode:

- 'MNT ' when ready to download a new Non-vital Configuration;
- progress messages during and after a Non-vital Configuration download.

A.11.6.4 Start Up

The alphanumeric display shows a sequence of information (in hexadecimal) during start-up.

Time after Start-up	Information	Details
0–4 secs		Display shows various states followed by 'RUN' to indicate the application software is running.
4–6 secs–	Lamp test	All segments/dots illuminate to verify they are functional.
6–9 secs.	Backplane address	Display shows 'A *hh*' where '*hh*' is the backplane address of the slot holding the Network Diagnostic Card (NCDC).
9–12 secs.	Software version	Display shows 'V *hh*' where '*hh*' is the version number of the NCDM software.

Table A27: Start-up Display Sequence—NCDM

The NCDM will indicate incompatible application and bootloader software by displaying 'Err '.

A.11.6.5 Operation

A correctly operating NCDM will show the following:

Indicator	Condition
Internal Fault LED	Off
Alphanumeric display	Blank
Watchdog LED	Regularly flashing green when in an on-line installation. Regularly flashing orange when in a stand-by installation.
Serial LED(s)	Flashes green when the NCDM is receiving messages though the associated serial port. These LEDs will flash irrespective of whether the message is addressed to the NCDM. Flashes red when the NCDM is transmitting messages through the associated serial port.
Network LED(s)	Flashes green when the NCDM is receiving messages though the associated network port. These LEDs will flash irrespective of whether the message is addressed to the NCDM. Flashes red when the NCDM is transmitting messages through the associated network port.
Power Indicators	Steady green
Installation status	Steady green for on-line installation in stand-by system.

Table A28: Operation Indicators—Normal—NCDM

Note: ***The watchdog LED flashes red when the NCDM is in Maintenance mode.***

The Serial and Network LEDs may appear to be ON rather than flashing when the data rate is high.

A.11.6.6 Fault Detection

A.11.6.6.1 WESTRACE Module Faults

During the first 16 seconds after power up, all WESTRACE modules display in sequence via their diagnostic LEDs:

- backplane address;
- software version;
- the value 00 (all LEDs off) to indicate ‘no fault’.

During operation, each module will generate a non-zero fault code if a fault is detected.

The NCDM polls each module in turn to read this information, and will record any changes. These changes are stored in the order that they are

polled by NCDM, which may not necessarily be the order in which they occurred.

A.11.6.6.2 NCDM Faults

In the event of an internal NCDM fault, the NCDM will either:

- display a code on the alphanumeric display, log a fault, and continue operating. This action is taken for 'non-fatal' faults (such as a comms port failure, low battery, or date/time not set), which do not compromise safe operation of the NCDM;
- shutdown the NCDM and display a code on the alphanumeric display. This action is taken for a 'fatal' fault (such as software or hardware malfunctioning). A fault will be logged when the system is restarted.

When an internal fault is the cause of an NCDM shutdown:

a) the NCDM will lose communications with the VLM;

b) the VLM will display a fault code (typically 34h) because of the communications loss but the VLM will keep running because the NCDM is a non-vital module;

   The only way to clear the VLM fault code is to restart the WESTRACE system.

At this point, all NCDM communications ports are disabled and will stay that way until WESTRACE is restarted.

A.11.6.7 Fault Codes

The alphanumeric display comprises four digits; D1, D2, D3 and D4 reading from top to bottom on the display (figure A.32). Figures A.33 to A.35 show the alphanumeric display being read left to right where the left position corresponds with the top position in figure A.30.

D1	D2	D3	D4

Figure A.32: Four Digit Alphanumeric Display—NCDM

The hexadecimal numbers shown by this display identify the following:

- the class of fault (internal NCDM fault, port fault, or module network session fault);
- the port number and module address or network session, if appropriate;
- a code identifying the fault.

Digit D1 identifies the port. The other three digits (D2–D4) display:

- the fault code;
- module address, or;
- network session number.

The following nomenclature is used in the diagrams and tables below:

p	port number (hex)
mm	module or session (hex)
f	fault code (hex)

A.11.6.7.1 Port Faults

Digit D1 identifies the faulty port. Digits D2 and D3 are set to zero and digit D4 is the fault code.

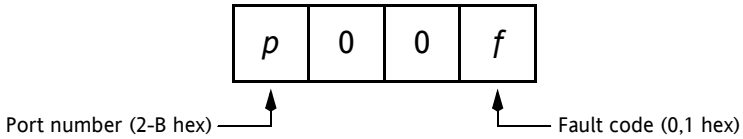

Figure A.33: Alphanumeric Display—Port Fault—NCDM

The port number used are:

2 = Serial port 2;

3 = Serial port 3;

8 = IMB port;

9 = INCL port;

A = VLM6 port;

B = Network port.

For example, `A001` indicates a fault code `1` on port `A` (the VLM6 port).

Port Codes in General

Table A29 shows valid port fault codes.

CODE(H)	FAULT DESCRIPTION	ACTION
p000	Port OK	None.
p001	Port time out or fail: a. Timeout when waiting for an incoming message (serial server port). b. Failure to get a response from any external server (serial client port). c. Detected failure of Ethernet link (network port)	Serial or network LED flashing green: • check the port configuration in Non-vital Configuration; • replace the NCDM if the configuration is correct. Serial or network LED off: • check the comms link cabling and connections; • replace the protection module or the NCDC.

Table A29: Fault Codes—Port Codes in General—NCDM

External Port, Module and Session Codes

CODE(H)	FAULT DESCRIPTION	ACTION
A001 8001	VLM6 port time-out. IMB port time-out.	This code is displayed if the VLM shuts down for any reason. Try the following if this code is on display and the VLM is still running: a. Restart WESTRACE. b. Check to ensure the VLM and NCDM Non-vital Configurations are consistent with respect to transfer states passed between them. Normally GCSS ensures that this is the case. c. Check to ensure that only one NCDM and no DM is installed. d. Replace the NCDM.
9001	INCL port time-out.	An NCDM in an On-line installation displays this code if it does not receive an INCL acknowledgment message from the NCDM in the Stand-by installation. Try the following if this code is on display: a. Check the INCL Rx link to the NCDM in the On-line installation; b. Check the INCL Tx link on the NCDM in the Stand-by installation; c. Replace the NCD PFM in the On-line installation. d. Check the INCL Rx link to the NCDM in the Stand-by installation; e. Check the INCL Tx link on the NCDM in the On-line installation; f. Replace the NCD PFM in the Stand-by installation.

Table A30: Fault Codes—Ext. Port—Module and Session—NCDM

Internal Port Codes

The following code is not displayed. It is reported in the fault log only.

CODE	DESCRIPTION
p000	The port ***p*** has recovered and is now operational.

Table A31: Fault Codes—Internal Port—NCDM

A.11.6.7.2 Module or Session Faults

Digit D1 identifies the port to which the module-network session is connected. Digits D2 and D3 identify the module address or session number, and digit D4 is the fault code.

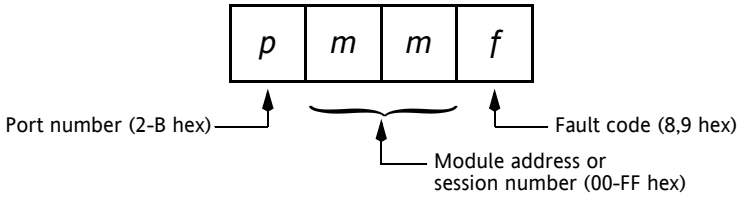

Figure A.34: Alphanumeric Display—Module or Session Fault—NCDM

The NCDM reports on faults for connected module addresses or session numbers. The fault code is interpreted from the alphanumeric display as described here. Module or session faults in the range:

`00-7F` are reported by the NCDM in an on-line WESTRACE,
`80-FF` are reported by the NCDM in a standby WESTRACE.

In all cases, a fault code of zero means 'no fault'.

For example, a fault code of '21B8' on an NCDM indicates a fault code 8 on the module with address 0x1B (serial port 2).

Table A32 shows valid fault codes.

CODE(H)	FAULT DESCRIPTION	ACTION
pmm9	Communication to an address has timed out. **Slave port**—timeout when waiting for a valid message addressed to address or session ID ***mm*** (hex) on port ***p*** (hex). **Master port**—timeout waiting for a valid response from the S2 field address or session ID ***mm*** (hex) on port ***p*** (hex).	**Slave port** a. Check that the control system master is sending data to this address or session ID. b. Check the addresses or session IDs stored in the Non-vital Configuration to see if they match the addresses or session IDs sent by the office. **Master port** a. Check that the slave at this address or session ID is functioning correctly. b. Check that the addresses or session IDs stored in the Non-vital Configuration match those of the connected slave.

Table A32: Fault Codes—Module or Session—NCDM

Other Module or Session Codes

The following code is not displayed. It is reported in the fault log only.

CODE(H)	DESCRIPTION
pmm8	Address or session ID ***mm*** (hex) on port ***p*** (hex) has recovered from a fault and is now operational.

Table A33: Fault Codes—Other—Module or Session—NCDM

A.11.6.7.3 Internal faults

Digit D1 is blank and Digits D2 to D4 display the fault code (000-FFF).

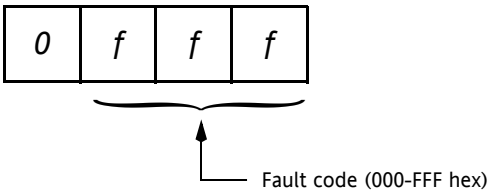

Figure A.35: Alphanumeric Display—Internal Fault—NCDM

The first action should be to restart WESTRACE. Next, find the displayed fault code in the tables below and take the recommended action. All of these fault codes, plus any read from the fault latches of other WESTRACE modules are logged to the NCDM fault buffer in the order they are detected by the NCDM.

Fatal NCDM Fault Codes

These faults cause the NCDM to shut down.

CODE(H)	FAULT DESCRIPTION	ACTION
003	Application Checksum Error	Replace NCDM
004	Stack Guard Band Error	"
005	RAM Error	"
009	Stack Error	"
080	Non-vital Configuration checksum error	Download new Non-vital Configuration
084	Non-vital Configuration version number error	Confirm that the version switches are correctly set. Download new Non-vital Configuration if the switches are correctly set.
100	Build error	a. Check the NCDM configuration parameters for their range and correct any that are out of range. b. Ensure that all WSA/S2 protocol sessions over the network port have unique housing addresses for client and server sessions. c. Ensure that parameters for the vital communication ports (configured for the VLM6) are matched by the NCDM configuration. d. Re-build the NCDM configuration and load it onto an NCDM.
101	Out of memory	Replace NCDM
102	Operating system error	"
103	Internal error	"
104	Task suspended	Replace NCDM

Table A34: Fault Codes—Fatal—NCDM

CODE(H)	FAULT DESCRIPTION	ACTION
105	NVRAM error	"
107	Comms buffer error	"
108	Non-vital Configuration format version error	Download new Non-vital Configuration
109	Watchdog restart	Replace NCDM
10A	No VLM Non-vital Configuration copy	Restart WESTRACE
10B	Wrong VLM Non-vital Configuration copy	"
10C	VLM interface versions mismatch	Check the NCDM and VLM Non-vital Configuration versions.
10D	VLM address mismatch	Check the NCDM Non-vital Configuration and WESTRACE installation details
10F	Wrong IMB slot	Move NCDM to the correct backplane slot
112	Duplicate IP Address	a. Check the NCDM Non-vital Configuration for correct IP address. b. Check other equipment connected to the network for a duplicate IP address. In a Stand-by system: Ensure the secondary IP address configuration switch is set correctly.
113	Duplicate Session Id	a. Ensure that the Application Session Id is unique for all sessions over the network port. b. Ensure that each diagnostic port address is unique and different from any Application Session Id. c. Correct the NCDM configuration where necessary, then re-build it and load it onto an NCDM.

Table A34: Fault Codes—Fatal—NCDM ***(Continued)***

Non-fatal NCDM Fault Codes

These faults are logged and displayed by the NCDM. The NCDM continues operating.

CODE(H)	FAULT DESCRIPTION	ACTION
10E	IMB data error	No action required.
111	Timing error	"
800	NVRAM is invalid.	Could be due to an old or faulty battery. Replace the battery when the error occurs on start-up, otherwise replace the NCDC. Note: NVRAM is always cleared when the NCDM is configured or re-configured; such an error is logged upon first start-up.
801	Event log store was invalid, therefore reset.	"
802	Fault log store was invalid, therefore reset.	"

Table A35: Fault Codes—Non-fatal—NCDM

CODE(H)	FAULT DESCRIPTION	ACTION
803	Operations log store was invalid, therefore reset.	"
804	SR Latch output states in NVRAM are invalid.	"
805	Phone numbers in the NVRAM are invalid.	Could be due to an old or faulty battery. Replace the battery when the error occurs on start-up, otherwise replace the NCDC. Note: NVRAM is always cleared when the NCDM is configured or re-configured; such an error is logged upon first start-up.
806	Passwords in the NVRAM are invalid	"
810	Error reading from fault bus or reading from a backplane address. (FDet read error).	Check that all cards are in place and if the error is still persistent, replace the NCDM.
900	Vital message length or small channel port number out of range for messages to VLM6.	Check configuration of vital sessions on the network port.
901	Invalid BCC on non-vital message from VLM6.	Check configuration of the VLM6 interface.
902	Big channel message length out of range on message from VLM6.	"
903	NCDM could not obtain DPRAM semaphore.	Check the VLM6-NCDM interface; replace one or other of the modules.
904	Error in Hot Stand-by INCL.	Check INCL hardware. Ensure that both NCDMs have the same configuration.
90C	Invalid session number.	Ensure the same Session ID is used for connecting installations.
90D	Message delayed.	Check network hardware.
90E	Message repeated or earlier.	"
90F	Session occupied.	Check for unexpected equipment on the network. Ensure that only one remote installation is connected at any time (for same Port ID).
910	Session or IP changed.	No action required.
911	Invalid Rx timestamp.	Check network hardware.
BAT	Low battery	Replace battery
F11	Main cycle not synchronized (NCDM cannot keep up with VLM.)	Check the NCDM and VLM Non-vital Configurations.
F21	Software version number lost	Replace NCDM
F22	Module information error	"
F23	Fault bus error	"
F24	Fault detection NVRAM error	"
TIME	Time has not been set	Set correct time through MoviolaW, CTC or Getlog. It is possible to set the time via the S2 protocols.
DIAG	There are faults stored in the Fault Buffer.	Connect or check and restart an external diagnostic system and request the fault codes from the Fault Buffer.

Table A35: Fault Codes—Non-fatal—NCDM ***(Continued)***

Other NCDM Codes

The following codes are not displayed. They are reported in the fault log only.

CODE(H)	DESCRIPTION
F00	Recovered from low battery condition
F01	Low battery (corresponds to 'BAT' display)
F10	Recovered from VLM out-of-sync error
F30	Time has been set, i.e. an invalid time/date error has been corrected
F31	Date/time not set (corresponds to 'TIME' display)
F40	Network port re-enabled
F41	Network port disabled
F50	Vital link up
F51	Vital link down

Table A36: Fault Codes—Other (Not Displayed)—NCDM

A.11.7 External Connections

Style 1: NCD PFM

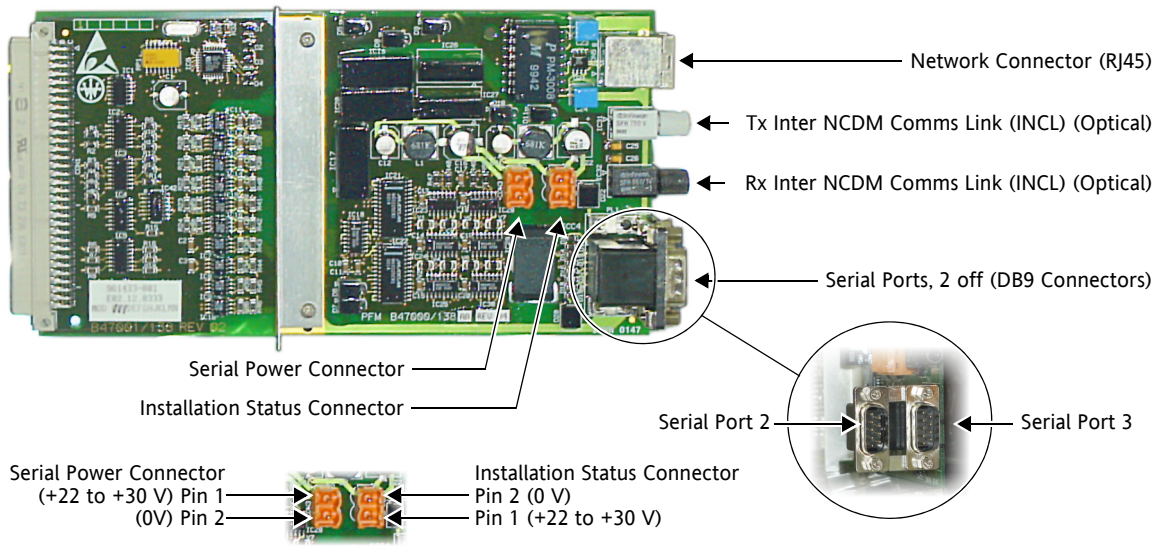

Style 2: NCDC PFM

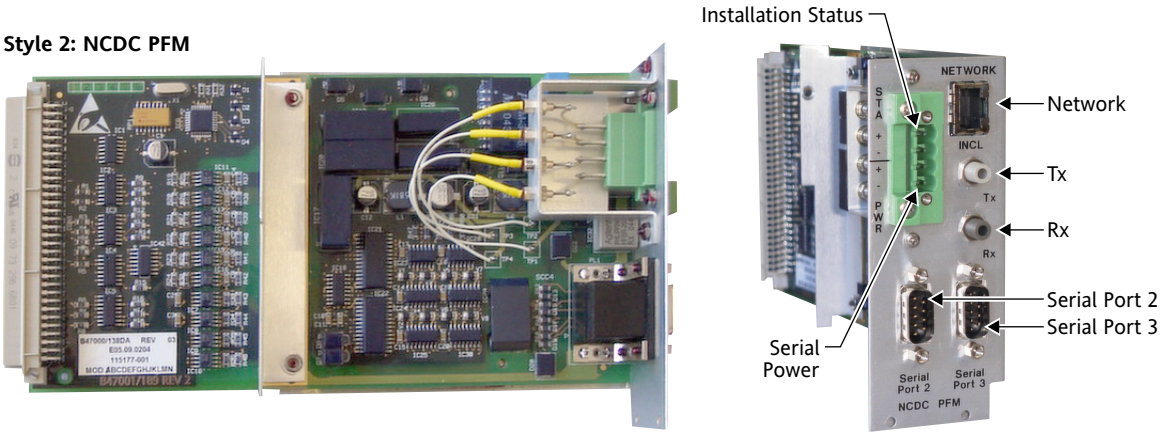

Figure A.36: External Connectors on the Two Styles of NCD PFM—NCDM

A.11.7.1 Serial Power Connector

Table A37 and figure A.36 show the serial power terminals for a Style 1 NCD PFM (via a Klippon removable screw terminal plug). For Style 2 (NCDC PFM), these terminals are brought to the board's connector panel and labelled **PWR**.

NCD PFM Pin Number (see figure A.36, Style 1)	Signal
1	+22 to +30 V
2	Common (0V)

Table A37: Serial Power Connector Pinout—NCD PFM—NCDM

A.11.7.2 Installation Status Connector

Table A38 and figure A.36 show the installation status terminals for a Style 1 NCD PFM (via a Klippon removable screw terminal plug). For Style 2 (NCDC PFM), these terminals are brought to the board's connector panel and labelled **STA**.

NCD PFM Pin Number (see figure A.36, Style 1)	Signal
1	+22 to +30 V
2	Common (0V)

Table A38: Installation Status Connector Pinout—NCD PFM—NCDM

A.11.7.3 Serial Connectors

The serial interface is a pair of male DB9 connectors configured as either RS232 or RS485 (figure A.36). The DB9 on the left is serial port 2, and the DB9 on the right (closest to the PCB) is serial port 3.

RS232-C Connection

Pin Number	Signal Name	Signal Source
1	DCD	External equipment
2	RxD	External equipment
3	TxD	NCDM
4	DTR	NCDM
5	ISOGND	(Common)
6	CLKOUT	NCDM
7	RTS	NCDM
8	CTS	External equipment
9	CLKIN	External equipment

Table A39: DB9 Pinout—RS232 Connection—NCD PFM—NCDM

RS485 Connection

Pin Number	Signal Name	Signal Source
1	RxD–	External equipment
2	RxD+	External equipment
3	TxD+	NCDM
4	TxD–	NCDM
5	ISOGND	(Common)

Table A40: DB9 Pinout—RS485 Connection—NCD PFM—NCDM

Pin Number	Signal Name	Signal Source
6	CLKOUT+	NCDM
7	CLKOUT–	NCDM
8	CLKIN–	External equipment
9	CLKIN+	External equipment

Table A40: DB9 Pinout—RS485 Connection—NCD PFM—NCDM

A.11.7.4 Network Connector

The network interface is an RJ45 connector with the following configuration:

Pin Number	Signal Name	Signal Source
1	Tx+	NCDM
2	Tx-	NCDM
3	Rx+	External Equipment
4	Not used	-
5	Not used	-
6	Rx-	External Equipment
7	Not used	-
8	Not used	-

Table A41: RJ45 Pinout—Network Connection—NCD PFM—NCDM

A.11.7.5 INCL Connector

The INCL interface comprises a transmit (White) and receive (Black) fibre optic connectors. Figure A.36 shows these connectors. The INCL interface is designed for a 2.2 mm outside diameter fibre with a 1 mm polymer fibre core. The transmitter and receiver connections are designed such that no special tooling is required to achieve optical termination.

A.11.7.6 Production Port

This port is a male DB9 connector on the front edge of the card (see figure A.28). Signal levels are to RS232-C standard and the connector pinout is shown in table A42. This port is only enabled when the NCDM is in Maintenance mode.

Pin Number	Signal	Comments
1	N/C	
2	RxD input	
3	TxD output	

Table A42: DB9 Pinout—Production Port—NCDM

Pin Number	Signal	Comments
4	N/C	
5	Common	
6	N/C	
7	RTS output	(Always active)
8	MAINT input	(Selects maintenance mode)
9	SPEED input	(Selects maintenance mode data transfer rate)

Table A42: DB9 Pinout—Production Port—NCDM ***(Continued)***

A.11.7.7 Cabling Details

A cable with any of the configurations in figure A.37 will allow a personal computer to connect to the:

- Production port (a DB9 connector on the front edge of the NCDC);
- Serial diagnostic port, if configured (a DB9 connector at the rear of the housing).

Either a standard serial cable or a maintenance cable can be connected to the diagnostic port. The interconnection of pins 7, 8 and 9 on the maintenance cable has no effect when connected to a serial diagnostic port.

Plugging a maintenance cable into the Production port and restarting the WESTRACE installation will cause the NCDM to switch to its Maintenance Mode of operation. The wiring of the cable determines the data transfer rate as follows:

- A maintenance cable with interconnection of pins 7, 8 *and* 9 will cause the NCDM to select the 115 kbps data transfer rate;
- A maintenance cable *without* pin 9 connected to pins 7 and 8 will cause the NCDM to select the 9.6 kbps data transfer rate.

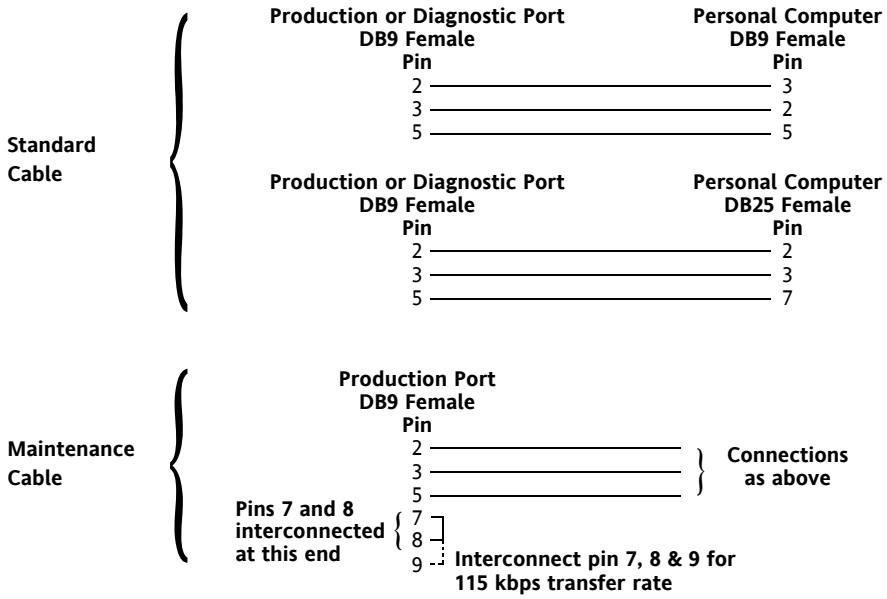

Figure A.37: Cable Configuration Details—NCDM

A.11.7.8 Connecting a Diagnostic System

Most WESTRACE installations will have a permanently connected MoviolaW. An installation can be configured to allow remote access via Hayes compatible modem or through the network.

Types of Diagnostic System

Two diagnostic systems are available:

- MoviolaW—Windows based logging and display utility;
  Provides the following services:
  - Real time graphical display of the state of the interlocking;
  - Records for later playback, events (logic state changes) which occur after MoviolaW commences running;
  - Extraction of historical fault information from an NCDM (although not historical event or operation information);
  - Basic maintenance functions such as setting the time and displaying communication statistics;
- GETLOG—a command line utility for serial communications,
  NGETLOG—a command line utility for network communications;
  Provide the following services:
  - Extraction of historical and real time event, fault and operation information which is displayed and stored in text form;
  - Basic maintenance functions such as setting the time and displaying communication statistics;
  - Simpler to install and configure than MoviolaW;
  - Can support larger systems than MoviolaW.

Requirements

You will need:

- A personal computer (PC) loaded with MoviolaW or GETLOG or NGETLOG;
- The MoviolaW display files for the particular installation, plus the following configuration files:
  - `*.ins` (for vital installation);
  - `*.ncd` (for non-vital (NCDM) installation);
  - `*.wip` (for both vital and non-vital installations);
  - `*.imp` (for vital installation).
- For GETLOG and NGETLOG, it is useful to have the Vital and Non-vital Configuration image (`.img`) files for the installation;
- The passwords for accessing the particular NCDM;

  For MoviolaW, the passwords for a particular NCDM are stored in the MoviolaW `.ini` file, and are configured using the MoviolaW NCDM driver software;

  For GETLOG and NGETLOG, the password must be specified on the command line;
- A cable to connect between:
  - the serial port(s) on the PC and the serial Diagnostic port (figure A.37), or;
  - the network port on the PC and a network hub associated with the WESTRACE installation;
- The user manual for the chosen diagnostic system.

Procedure

a) Connect the PC to a configured diagnostic port or network session at the rear of the housing. See figure A.36 and refer to the local documentation;

b) Start up the chosen diagnostic system;

c) Follow the guidelines for fault finding.

A.12 Non-vital Communications and Diagnostic Module (NVC/DM)

A.12.1 Description

The NVC/DM module provides multiple serial interfaces, non-vital logic processing and data logging of time stamped vital and non-vital logic changes and WESTRACE system faults. It may be used as part of a WESTRACE system or as a stand-alone communication and logic processing module.

It has one configuration communication port and up to six external I/O ports. Each port is configured for function and communication protocol by the Non-vital Configuration that is downloaded into non-volatile memory on the module. The physical interface for each port is configured by a separate plug-on daughter board.

Up to three of the ports can be used for a diagnostic interface. These use the Diagnostic protocol and are connected directly or through a modem to MoviolaW or GETLOG. Software packages designed for earlier WESTRACE diagnostic modules (eg DM and DM128) will not work with NVC/DM.

The remaining ports use either S2 protocol (WSL or WSA) and may be configured to emulate a WESTRONIC S2 field station or a WSA S2 office. Typically, these ports are connected to a local control system (eg WEST-CAD), a remote CTC system or an S2 based local panel. The ports may be configured for connection to redundant bearers for external communications availability.

Only one NVC/DM module may be installed in a WESTRACE system. Normally it occupies the two slots (4 and 5) adjacent to the VLM in housing 1.

Note: ***The NVC/DM only works with the HVLM128 and VLM5.***

The NVC/DM has been validated for Hot Standby operation but only as a diagnostic module (emulating a DM128 or DM5).

The term 'Non-vital Configuration' equates to 'CED' for older WESTRACE technology.

A.12.2 Particulars

A.12.2.1 Circuit Boards

The NVC/DM comprises:

- two main circuit boards:
  - Logic Evaluation Card (LEC);
  - Communications Interface Module Filter and Interface Module (CIMFIM);

- up to six I/O daughter boards;
- the Communications Interface Module Protection Module (CIMPM) which is the PFM for the NVC/DM.

Each daughter board:

- provides the physical interface for either a diagnostic or telemetry serial port;
- provides either of RS232-C or RS485 signal levels, type SDB232 and SDB485 respectively.

A.12.2.2 External Ports

Table A43 shows how port numbers are allocated. Figure A.50 illustrates the physical port connectors at the rear of the CIMPM.

Port No:[1]	Type	Used For
1	-	Do not use.
2	Serial	Diagnostic or non-vital telemetry connection
3	"	"
4	"	"
5	"	Non-vital telemetry connection only
6	"	"
7	"	"
8	IMB	The IMB interface to the VLM (internal)

Table A43: Allocation of Port Numbers—NVC/DM

1. See figure A.50.

Telemetry Ports

Each telemetry port can be connected to:

- a control centre;
- a control computer;
- S2 field stations.

Telemetry connections can be direct through a permanently connected modem.

Each telemetry port may be configured as either:

- a *slave port*, where the NVC/DM operates as a WSA/S2 or WSL/S2 field station;
- a *master port*, where the NVC/DM operates as a WSA/S2 office.

NVC/DM telemetry ports can appear as a range of S2 addresses.

Diagnostic Ports

Each diagnostic port can be configured as:

a) a permanent direct connection, where the port is connected directly to the external diagnostic equipment (eg MoviolaW);

   A fault will be logged if this connection fails;

b) an intermittent connection, where the port is connected to the external diagnostic equipment only when required;

   No fault will be logged;

c) a dial-in connection, where the port is connected to a Hayes compatible modem. Remote external diagnostic equipment can dial in and interrogate the NVC/DM;

d) a dial-out connection, where dial-in is not possible, but the NVC/DM will initiate a dial-out to remote external diagnostic equipment in the event of a fault;

e) a dial-in/out connection which allows both dial-in and dial-out.

For options c), d), and e), a fault will *not* be logged if the external diagnostic equipment hangs up, but will be logged if the NVC/DM cannot communicate with the modem.

A.12.2.3 Production Port

The Production Port is on the front of the module. This port is used for downloading the Non-vital Configuration from the GCSS and uploading the Non-vital Configuration and Vital PROM Data to the ICS.

A.12.2.4 Serial Power Supply

The NVC/DM derives operational power for its communication ports from a separate isolated power supply. The ports are disabled when this power is not present.

A.12.3 Function

The main functions of the NVC/DM are:

- Evaluate non-vital logic;
- Exchange configured logic states with control centres, control computers, external WSA/S2 field stations and the vital processor (HVLM128 or VLM5);
- Log all changes to vital and non-vital logic states, all detected WESTRACE system faults and other significant operational occurrences (known as ‘operations’);

  The NVC/DM can store up to 250,000 change of state events, 200 system faults and 100 operations in non-volatile RAM (NVRAM);

  The logging capacity is 3 days for a small interlocking without an external diagnostic system connected, or 6 hours for a large interlocking without an external diagnostic system connected;

  The NVC/DM has its own Real Time Clock for time and date stamping of logged events, WESTRACE system faults and operations.

The time and date can be set from a control centre or through a diagnostic port;

- Allow an external diagnostic system such as MoviolaW to extract logged data and view current logic states;
- Allow an external system to upload the Non-vital Configuration and Vital PROM Data.

Timestamp Synchronisation

Where a system consists of more than one WESTRACE installation, it is important that the time of day in each installation is the same so that their events can be correlated by time.

A typical real time clock will drift by 2 seconds a day, so two installations may drift apart by 4 seconds a day (24 minutes over 12 months).

To ensure time synchronisation of a system consisting of more than one WESTRACE installation, an external diagnostic system should be used to synchronise the installation's clocks by sending regular 'set time' commands.

A.12.4 Operation

The NVC/DM has four operating modes:

Mode	Description	Indications
Normal	Normal operation.	Watchdog LED flashes **green**.
Maintenance	Used for downloading a new Non-vital Configuration.	Watchdog LED flashes **red**.
Production	Used for downloading new firmware.	Watchdog LED **off**. Display shows **Prd**.
Shutdown	NVC/DM has shutdown because of a fatal internal fault.	Watchdog LED not flashing. Display shows a 3-digit fault code.

Table A44: Operating Modes—NVC/DM

Unless otherwise specified, the functionality described here relates to Normal mode only.

A.12.4.1 Selecting Maintenance Mode

Maintenance mode is manually selected by either:

a) connecting a special 'Maintenance' cable to the Production Port and then restarting the NVC/DM. See section A.12.7.4 for details;

b) setting one of the on-board switches and then restarting the NVC/DM. See figure A.38, and "S2 Switch Bank" on page A-130.

A.12.4.2 Selecting Production Mode

Production mode is selected either:

- automatically, if the NVC/DM firmware is detected as being invalid, or;
- manually, by setting one of the on-board jumpers and then restarting the NVC/DM. See “PROD Jumper” (page A-129).

A.12.5 Configuration

A.12.5.1 Hardware Settings

Figure A.38 illustrates the switch banks and jumpers used to configure the NVC/DM. Number 1 switch or jumper pin is indicated by a small triangle symbol in each case.

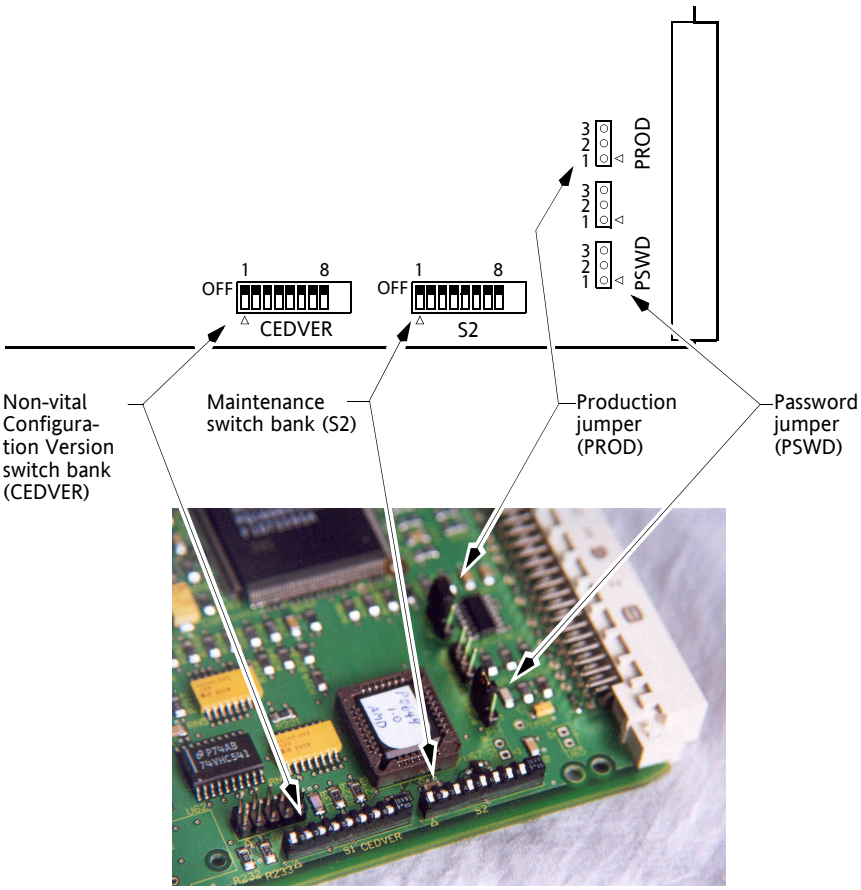

Figure A.38: Configuration Switches and Jumpers—NVC/DM

Jumpers

PROD Jumper

Production mode is entered by shorting pins 1 & 2 of the PROD jumper and then restarting the NVC/DM.

PSWD Jumper

The Diagnostic Mode passwords can be changed during operation of the NVC/DM. They can be reset to the values stored in the Non-vital Configuration by shorting pins 1 & 2 of the PSWD jumper and then restarting the NVC/DM.

Note: ***Store the PROD and PSWD jumpers on pins 2 and 3 when the modes are not set.***

Switches

CEDVER Switch Bank

The NVC/DM uses the version number set by the CEDVER switch bank to ensure the correct Non-vital Configuration is stored in PROM. Switch 1 is the least significant bit and switch ON is zero.

S2 Switch Bank

This switch bank is used for two purposes:

- putting the NVC/DM into Maintenance mode;
- setting the data transfer rate for the Production Port.

Set the switches according to table A45 and restart the NVC/DM to activate the desired configuration.

Switch	Setting
1	OFF for Normal mode ON to select Maintenance Mode
2	OFF for 9600 bits per second ON for 115200 bits per second
3–8	Not used. Normally left in the OFF position.

Table A45: Switch Bank S2—Valid Settings—NVC/DM

The NVC/DM will stay in Maintenance mode until switch 1 is returned to OFF and the system is rebooted.

A.12.5.2 Non-vital Configuration

The majority of the NVC/DM configuration is done using the GCSS and is stored in the Non-vital Configuration.

The Non-vital Configuration includes:

- default passwords;
- initial states of non-vital logic states;
- non-vital application logic and timer details;

- Configuration details for each port, such as:
  - protocol;
  - basic serial parameters (eg data transfer rate, handshaking);
  - clock signal usage (input, output or reconstructed from data);
  - protocol parameters (eg data word length, addresses, inter-scan delay);
  - default dial-out telephone numbers (diagnostic ports only);
  - I/O bit mappings (telemetry ports only).

A.12.5.3 Replacing the NVC/DM

A replacement NVC/DM must be configured to suit the particular location. Usually this means the replacement must be configured to exactly match the NVC/DM being replaced.

Before beginning, you must:

a) Obtain permission from the Signaller and adhere to the railway authority's safety requirements;

b) Power down the WESTRACE installation.

Remove the NVC/DM from the WESTRACE Housing

a) Remove the front panel of the WESTRACE housing;

b) Observe the anti-static procedures;

c) Remove the NVC/DM from the housing using the WESTRACE card extraction tool. See figure A.39.

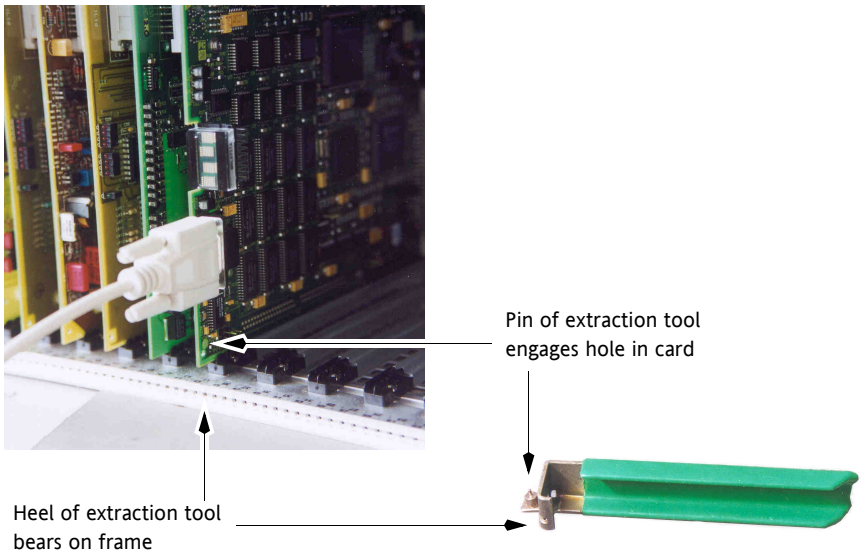

Figure A.39: Removing a Card From the WESTRACE Housing

Fit Daughter Boards

There is one daughter board for each active serial port (except the Production port). The replacement NVC/DM must use daughter boards

of identical type and in the same locations as the removed NVC/DM. This is defined in the local documentation.

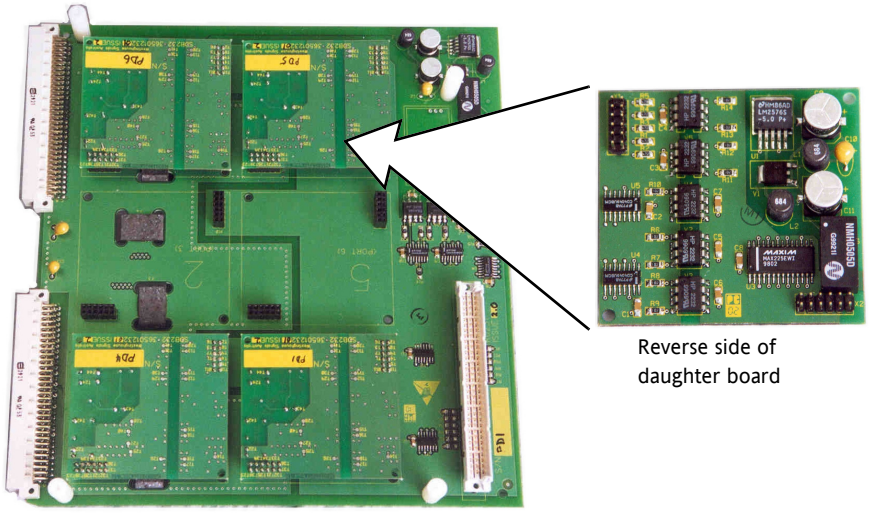

Figure A.40: CIMFIM With Four Daughter Boards—NVC/DM

There are two types of daughter board:

- SDB232 for RS232-C communications;
- SDB485 for RS485 communications.

Working daughter boards may be swapped from the removed NVC/DM to the replacement NVC/DM if required.

a) Separate the CIMFIM from the LEC; see figure A.41;

b) Remove and insert daughter boards as required;

   Each daughter board is attached to the CIMFIM by two connectors;

   Ensure that all plug pins properly mate with the sockets. It is possible to connect the daughter boards with only half the pins actually plugged into the socket;

c) Re-connect the CIMFIM to the LEC.

Note: ***Ensure that the PROD and PSWD jumpers on the LEC board are absent or stored on pins 2 and 3.***

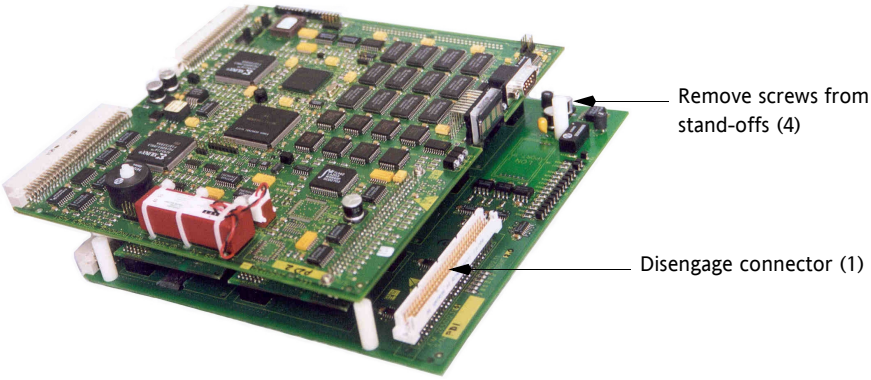

Figure A.41: Separating the LEC and CIMFIM—NVC/DM

Install the Non-vital Configuration

There are five parts to this task:

a) Ensuring you have the right equipment;

b) Setting the Non-vital Configuration version switches on the NVC/DM LEC;

c) Switching the NVC/DM to Maintenance Mode;

d) Installing the NVC/DM into the housing;

e) Down loading the new Non-vital Configuration to the NVC/DM.

SAFETY WARNING

WESTRACE must not be controlling an interlocking while downloading a Non-vital Configuration.

Equipment Required

- A personal computer (PC) loaded with:s
  - the Graphical Configuration Subsystem (GCSS version 6 or later);
  - the correct Non-vital Configuration for the NVC/DM;
  - the Installation Check System (ICS).
- A 'standard' cable as described in figure A.52 to connect the serial port on the PC to the Production port on the NVC/DM LEC module.

  Alternatively, a 'maintenance' cable as described in figure A.52 may be used. The 'maintenance' cable configuration causes the NVC/DM to automatically start in 'Maintenance' mode. See "Setting the Maintenance Mode" on page A-134.
- A copy of the WESTRACE Graphical Configuration Subsystem Manual.

Setting Non-vital Configuration version switches

The NVC/DM requires that the Non-vital Configuration version must be that set by the CEDVER switches. This protects against loading an incorrect version. See figure A.42.

Set the switches on the LEC to define the Non-vital Configuration version specified on the GCSS printout for the Non-vital Configuration.

Switch 1 is the least significant bit. Switch ON is zero.

For example, to set Non-vital Configuration version 1, you set switch 1 OFF and switches 2-8 ON. This is illustrated by figure A.42. To set Non-vital Configuration version 5, switches 1 and 3 are OFF, all others are ON.

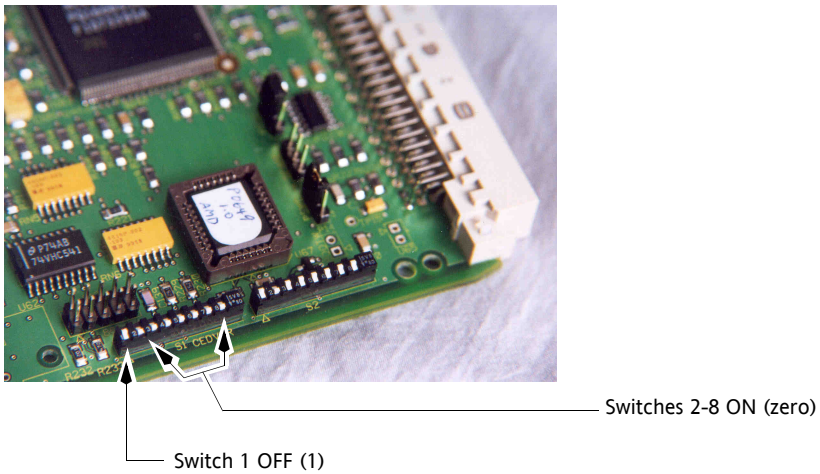

Figure A.42: Non-vital Configuration—Setting Version 1—NVC/DM

Setting the Maintenance Mode

Select 'Maintenance mode' either by connecting a Maintenance Cable to the Product Port, or by setting switches 1 and 2 of switch bank S2 to ON. See section A.12.4.1 for details.

Refitting the NVC/DM

Refit the NVC/DM into the housing. Insertion is the reverse of removal described in "Remove the NVC/DM from the WESTRACE Housing" (page A-131) with the exception of not replacing the front panel.

Downloading the Non-vital Configuration

a) Connect the cable of choice between the Production Port and the PC; see figure A.43;

b) Power up WESTRACE;

   Ensure that the NVC/DM has entered Maintenance mode (the watchdog LED should be flashing red);

c) Download the Non-vital Configuration according to the instructions in the WESTRACE Graphical Configuration Subsystem Manual.

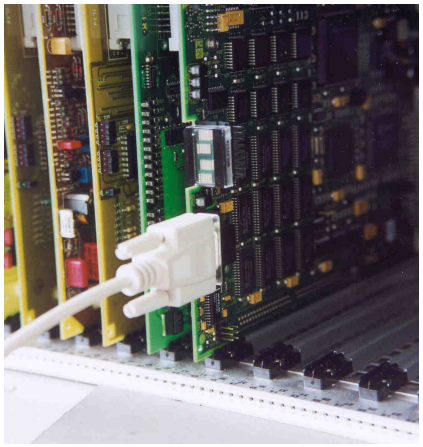

Figure A.43: Production Port—Connecting—NVC/DM

Verify the Data

The Non-vital Configuration must be verified before the system is returned to service.

a) Ensure the NVC/DM is in maintenance mode and the PC is connected to the NVC/DM Production Port;

b) Run ICS according to the instructions in the WESTRACE Installation Check System Manual;

c) Complete procedural checking and sign off as per the WESTRACE Installation Check System Manual.

Restore the System

When the Maintenance Cable was used to set Maintenance Mode

a) Power down WESTRACE;

b) Remove the cable from the Production Port;

c) Refit the front panel to the housing(s);

d) Power up WESTRACE;

e) Allow WESTRACE to run for several minutes; ensure that no fault codes are displayed;

f) Advise the Signaller of completion.

When Switch Bank S2 was used to set Maintenance Mode

a) Power down WESTRACE;

b) Remove the NVC/DM from the housing;

c) Set switch 1 of switch S2 to OFF (Maintenance Mode OFF). See figure A.38;

d) Refit the NVC/DM into the housing. Replacement of the NVC/DM is the reverse of the procedure described in “Remove the NVC/DM from the WESTRACE Housing” on page A-131;

e) Refit the front panel to the housing(s);

f) Power up WESTRACE;

g) Allow WESTRACE to run for several minutes; ensure that no fault codes are displayed;

h) Advise the Signaller of completion.

A.12.5.4 Battery Installation

A lithium battery is used to maintain logged data in non-volatile memory and the real-time clock when the NVC/DM is powered down. The battery has a very long life and in normal circumstances it is unlikely to require replacement. The NVC/DM is usually shipped with the battery connected.

To replace the battery:

a) Have a replacement battery of the same type as the original plus cable ties readily at hand. See figure A.44;

b) Snip the cable ties holding the old battery to the printed circuit board;

c) Remove the battery lead from the pins;

d) Connect the replacement battery to the pins. You have a short period to do this before data is lost;

e) Fix the replacement battery to the circuit board using the new cable ties;

f) Snip off the excess length of cable ties.

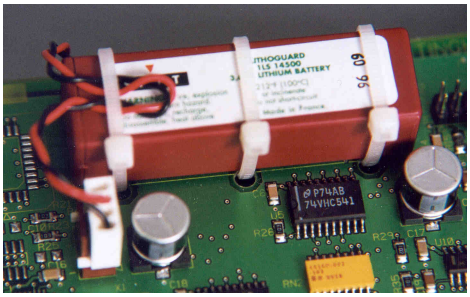

Figure A.44: Lithium Battery—NVC/DM

Handling Lithium Batteries

Observe the instructions elsewhere in this manual.

A.12.6 Indications

The 'user interface' of the NVC/DM comprises LEDs and a four digit alphanumeric display.

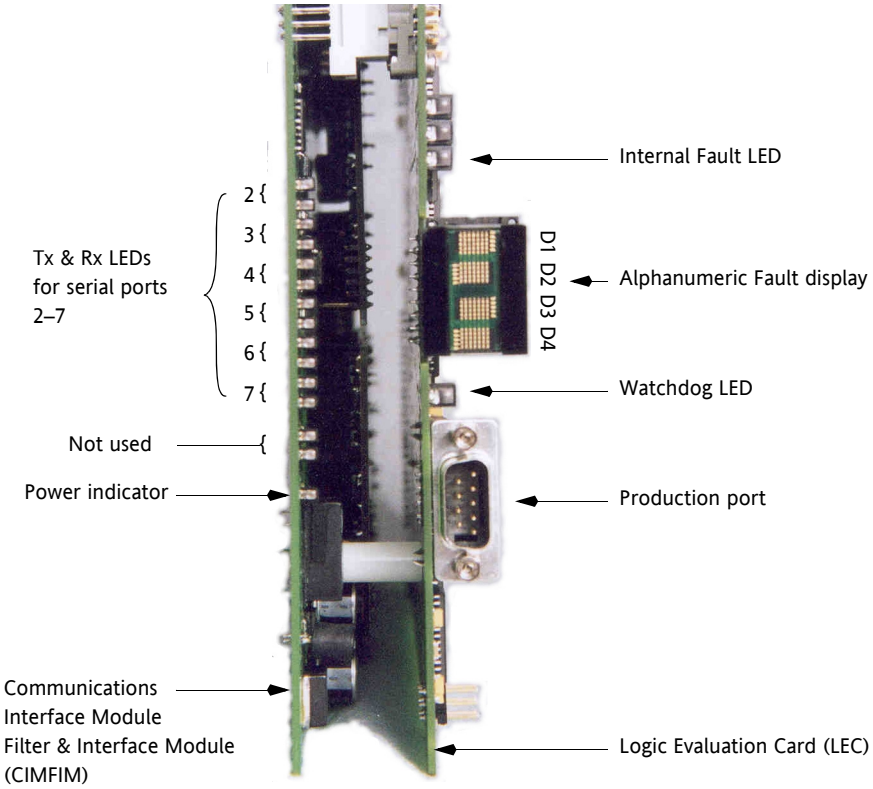

Figure A.45: User Interface—NVC/DM

A.12.6.1 Logic Evaluation Card LEDs

The LEC has two front panel LEDs:

- *Internal fault LED* (red)—illuminated whenever there is a non-fatal internal NVC/DM fault. These faults require attention, but are not serious enough to cause the NVC/DM to shutdown;
- *Watch dog LED* (normally green)—flashes at a regular interval if all is well with the NVC/DM. During the first minute or so of operation, the LED may flash at a faster than normal rate. It should then flash at the same rate as the green watchdog LED on the VLM.

  This LED flashes *red* when the NVC/DM is in Maintenance mode.

A.12.6.2 Communications Interface Module LEDs

The CIMFIM has 13 front panel LEDs:

- *Transmit LED* (yellow)—for each of the 6 serial ports. Flashes when data is transmitted;
- *Receive LED* (green)—for each of the 6 serial ports. Flashes when data is received;
- *Power Indicator LED* (green)—indicates the +24 V comms power supply is present.

See section A.12.6.5 for further information about these indicators.

A.12.6.3 Alphanumeric Display

The alphanumeric display can only show one fault at any time. However, all fault codes which occur are logged by the NVC/DM and can be examined using external diagnostic equipment.

Shutdown Mode

The alphanumeric display will show the applicable fault code if the NVC/DM shuts down because of a fatal internal fault. See table A52.

Normal Mode

Within the first 12 seconds of the NVC/DM operating in this mode, the alphanumeric display will show start-up information (see section A.12.6.4) and then it will be blank unless a fault is detected.

During operation, a 'non-fatal' fault may occur which will cause the NVC/DM to display a fault code but continue to operate. In the event of multiple faults being present simultaneously, the NVC/DM will display the code for the first of the following that applies:

a) 'TIME' if the NVC/DM real time clock has not been set;

b) a non-fatal NVC/DM internal fault code, see table A53;

c) a port fault code (lowest numbered port take precedence), see table A48;

d) an S2 address fault code (lowest numbered S2 address takes precedence), see section A.12.6.7.2);

e) 'FLT ' where one or more WESTRACE system faults have not been uploaded by the external diagnostic equipment;

f) 'BAT ' if the NVC/DM battery voltage is low.

Maintenance Mode

The alphanumeric display will show the following when the NVC/DM is in this mode:

- blank display when ready to download a new Non-vital Configuration;
- progress messages during and after a Non-vital Configuration download.

Production Mode

The alphanumeric display will show the following when the NVC/DM is in this mode:

- 'Prd ' when ready to download new firmware;
- progress messages during and after a firmware download.

A.12.6.4 Start Up

The alphanumeric display shows a sequence of information (in hexadecimal) during start-up:

Time after Start-up	Information	Details
0–4 secs		Ignore.
4–6 secs.	Lamp test	All segments/dots illuminate to verify they are functional.
6–9 secs.	Backplane address	Display shows 'A *hh*' where '*hh*' is the backplane address of the slot holding the Logic Evaluation Card (LEC).
9–12 secs.	Software version	Display shows 'V *hh*' where '*hh*' is the version number of the NVC/DM software.

Table A46: Start-up Display Sequence—NVC/DM

A.12.6.5 Operation

A correctly operating NVC/DM will show the following:

Indicator	Condition
Internal Fault LED	Off
Alphanumeric display	Blank
Watchdog LED	Regularly flashing green
Serial Rx LED(s)	Flashes green when the NVC/DM is receiving messages though the associated serial port. These LEDs will flash irrespective of whether the message is addressed to the NVC/DM.
Serial Tx LED(s)	Flashes yellow after the NVC/DM has transmitted a message through the associated serial port.
Power Indicator	Steady green

Table A47: Normal Operation Indicators—NVC/DM

Note: ***The watchdog LED flashes red when the NVC/DM is in Maintenance mode.***

The Rx and Tx LEDs may appear to be ON rather than flashing for high data rates.

A.12.6.6 Fault Detection

A.12.6.6.1 WESTRACE Module Faults

During the first 16 seconds after power up, all WESTRACE modules display in sequence via their diagnostic LEDs:

- backplane address;

- software version;
- the value 00 (all LEDs off) to indicate 'no fault'.

During operation, each module will generate a non-zero fault code if a fault is detected.

The NVC/DM polls each module in turn to read this information, and will record any changes. These changes are stored in the order that they are read, which may not necessarily be the order in which they occurred.

A.12.6.6.2 NVC/DM Faults

In the event of an internal NVC/DM fault, the NVC/DM will either:

- display a code on the alphanumeric display, log a fault, and continue operating. This action is taken for 'non-fatal' faults (such as a comms port failure, low battery, or date/time not set), which do not compromise safe operation of the NVC/DM;
- force a reset of the NVC/DM hardware. This action is taken if the NVC/DM software or hardware appears to be malfunctioning. A fault will be logged when the system restarts.

In many cases, the restart will clear the fault and the NVC/DM will resume normal operation.

When an internal fault is the cause of an NVC/DM restart:

a) the NVC/DM will temporarily lose communications with the VLM;

b) the VLM will display a fault code (typically 34h) because of the communications loss but the VLM will keep running because the NVC/DM is a non-vital module.

This VLM fault code will persist even after communications between the VLM and NVC/DM are returned to normal. The only way to clear the fault code is to restart the WESTRACE system.

If a second fault occurs within the first minute of operation after an NVC/DM restart:

a) the NVC/DM will conclude that the fault is permanent;

b) the NVC/DM will shutdown and display a fault code on the alphanumeric display.

At this point, all NVC/DM communications ports are disabled and will stay that way until WESTRACE is restarted.

A.12.6.7 Fault Codes

The alphanumeric display comprises four digits; D1, D2, D3 and D4 reading from top to bottom on the display. See figure A.45. Figures A.46 to A.49 show the alphanumeric display being read left to right where the left position corresponds with the top position in figure A.45.

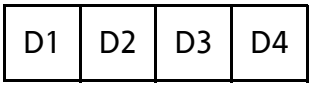

Figure A.46: Four Digit Alphanumeric Display—NVC/DM

The hexadecimal numbers shown by this display identify the following:

- the class of fault (internal NVC/DM fault, port fault, or an S2 address fault);
- the port number or S2 address as appropriate;
- a code identifying the fault.

Digit D1 is dedicated to identifying a port. The other three (D2–D4) are shared between identifying an S2 address and providing a fault code.

The tables below show a value for each digit but in some instances the value can vary. In those cases, the value of the digit is represented by a mnemonic as follows:

p	port number (hex)
mm	S2 address (hex)
f	fault code (hex)

A.12.6.7.1 Port faults

Digit D1 identifies the faulty port. Digits D2 and D3 are set to zero and digit D4 is the fault code.

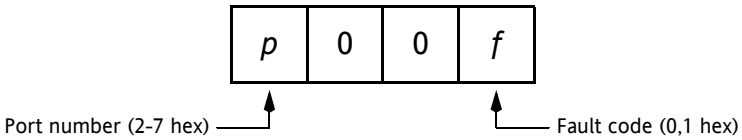

Figure A.47: Alphanumeric Display—Port Fault—NVC/DM

For example, `8001` indicates a fault code `1` on port `8`. The table below shows valid port fault codes.

CODE(H)	FAULT DESCRIPTION	ACTION
p001 The range for ***p*** is 2 to 7.	Port time out Timeout (10s) when waiting for an incoming message (slave port). Failure to get a response (within 10s) from any external slave (master port).	Serial Rx LED flashing: • check the serial port configuration in Non-vital Configuration; • replace the NVC/DM if the configuration is correct. Serial Rx LED off: • check the comms link cabling and connections; • replace the protection module, the related daughter board or the NVC/DM.
8001	VLM port time-out.	It is normal for this code to be displayed if the VLM shuts down for any reason. Try the following if this code is on display and the VLM is still running: a. Restart WESTRACE. b. Check to ensure the VLM and NVC/DM CEDs are consistent with respect to transfer states passed between them. Normally GCSS ensures that this is the case. c. Check to ensure that only one NVC/DM and no DM is installed. d. Replace the NVC/DM.

Table A48: Fault Codes—Port Codes in General—NVC/DM

Other Port Codes

This code is not displayed. It is reported in the fault log only.

CODE(H)	DESCRIPTION
p000	The port ***p*** has recovered and is now operational.

Table A49: Fault Codes—Port Codes—Other—NVC/DM

A.12.6.7.2 Telemetry Address Faults

NVC/DM telemetry ports can appear as a range of S2 addresses.

The NVC/DM reports on faults for connected S2 addresses. The fault code is interpreted from the alphanumeric display as described here.

An address fault indicates:

- *slave port*— no messages for this particular address have been received from the S2 office;
- *office port*— no response has been received from the S2 field station at this particular address.

These should not be confused with port faults, which indicate no messages at all are being received at a particular port.

Digit D1 identifies the port to which the S2 address is connected. Digits D2 and D3 identify the S2 address, and digit D4 is the fault code.

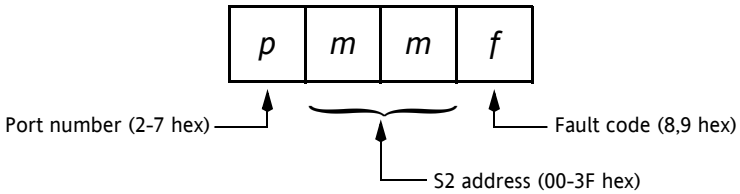

Figure A.48: Alphanumeric Display—S2 Address Fault—NVC/DM

For example, `21B9` indicates a fault code `9` on the S2 address `1B` (33 octal) connected to telemetry port 2.

The table below shows valid S2 address fault codes.

CODE(H)	FAULT DESCRIPTION	ACTION
pmm9	Communication to an S2 address has timed out. **Slave port**—timeout when waiting for a valid message addressed to address ***mm*** (hex) on port ***p*** (hex). **Master port**—timeout waiting for a valid response from the S2 field address ***mm*** (hex) on port ***p*** (hex).	**Slave port** Check that the telemetry master is sending data to this address. (Use S2 test link or similar.) Check the addresses stored in the Non-vital Configuration to see if they match the addresses sent by the office. **Master port** Check that the slave at this address is functioning correctly. (Use S2 test link or similar.) Check that the addresses stored in the Non-vital Configuration match those of the field stations.

Table A50: Fault Codes—S2 Address—NVC/DM

Other Telemetry codes

This code is not displayed. It is reported in the fault log only.

CODE(H)	FAULT DESCRIPTION
pmm8	S2 address ***mm*** (hex) on port ***p*** (hex) has recovered from a fault and is now operational.

Table A51: Fault Codes—Telemetry—Other—NVC/DM

A.12.6.7.3 Internal faults

Three digits (D2–D4) show the fault code (000–FFF) as defined by the tables below. Digit D1 is always blank.

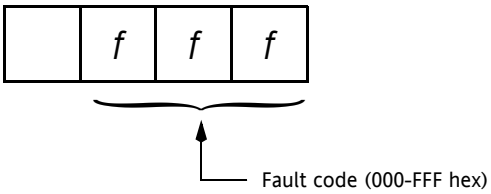

Figure A.49: Alphanumeric Display—Internal Fault—NVC/DM

The first action should be to restart WESTRACE. Next, find the displayed fault code in the tables below and take the recommended action. All of these fault codes, plus any read from the fault latches of other WESTRACE modules are logged to the NVC/DM fault buffer in the order they are detected by the NVC/DM.

Fatal NVC/DM Fault Codes

These faults cause the NVC/DM to restart. If the fault persists, the NVC/DM will shut down.

CODE(H)	FAULT DESCRIPTION	ACTION
003	Application Checksum Error	Replace NVC/DM
004	Stack Guard Band Error	"
005	RAM Error	"
009	Stack Error	"
080	Non-vital Configuration checksum error	Download new Non-vital Configuration
084	Non-vital Configuration version number error	Confirm that the version switches are correctly set. If the switches are correct, download new Non-vital Configuration.
100	Build error	Download new Non-vital Configuration
101	Out of memory	Replace NVC/DM
102	Operating system error	"
103	Internal error	"
104	Task suspended	"
105	NVRAM error	"
107	Comms buffer error	"
108	Non-vital Configuration format version error	Download new Non-vital Configuration
109	Watchdog restart	Replace NVC/DM
10A	No VLM Non-vital Configuration copy	Restart WESTRACE
10B	Wrong VLM Non-vital Configuration copy	"
10C	VLM interface versions mismatch	Check the NVC/DM and VLM Non-vital Configuration versions.
10D	VLM address mismatch	Check the NVC/DM Non-vital Configuration and WESTRACE installation details
10E	IMB data error	Replace NVC/DM. Could also be a faulty backplane or VLM.
10F	Wrong IMB slot	Move NVC/DM to the correct backplane slot
111	Timing error	Replace NVC/DM

Table A52: Fault Codes—Fatal—NVC/DM

Non-fatal NVC/DM Fault Codes

CODE	FAULT DESCRIPTION	ACTION
BAT	Low battery	Replace battery
FLT	There are faults in the fault buffer that have not yet been requested by an external diagnostic system.	Request faults from the fault buffer through MovioaW.
F11	Main cycle not synchronized (NVC/DM cannot keep up with VLM.)	Check the NVC/DM and VLM CEDs.
F21	Software version number lost	Replace NVC/DM
F22	Module information error	"
F23	Fault bus error	"
F24	Fault detection NVRAM error	"
TIME	Time has not been set	Set correct time through MoviolaW, CTC or Getlog. It is possible to set the time via the S2 protocols.
DIAG	There are faults stored in the Fault Buffer.	Connect or check and restart an external diagnostic system and request the fault codes from the Fault Buffer.

Table A53: Fault Codes—Non-fatal—NVC/DM

Other NVC/DM Codes

The following codes are not displayed. They are reported in the fault log only.

CODE(H)	FAULT DESCRIPTION
F00	Recovered from low battery condition.
F01	Low battery (corresponds to ‘BAT ’ display).
F10	Recovered from VLM out-of-sync error.
F30	Time has been set, i.e. an invalid time/date error has been corrected.,
F31	Date/time not set (corresponds to ‘TIME’ display).

Table A54: Fault Codes—Other—NVC/DM

A.12.7 External Connections

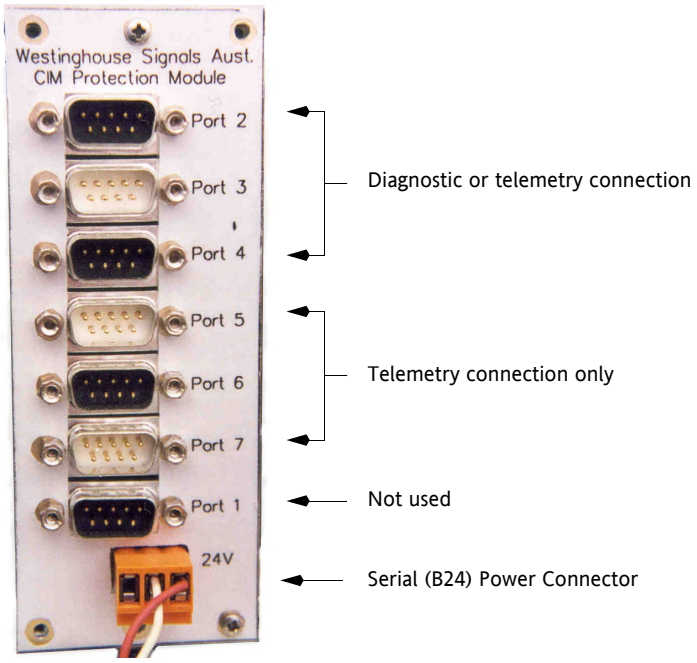

Figure A.50: External Connectors—CIMPM Card—NVC/DM

A.12.7.1 Serial Power Connector

Connection to the serial power interface is via a Klippon removable screw terminal plug with the following connections:

Pin Number	Signal
1	+24V
2	Common (0V)
3	Not used

Table A55: Serial Power Pinout—NVC/DM

A.12.7.2 Diagnostic and Telemetry Serial Connectors

Each serial interface is a male DB9 connector configured as either RS232 or RS 485. Figure A.50 shows all 7 DB9 connectors. Connector 1 is not used at present.

RS232-C Connection

Pin Number	Signal Name	Signal Source
1	DCD	External equipment
2	RxD	External equipment
3	TxD	NVC/DM

Table A56: DB9 Pinout—RS232 Connection—NVC/DM

Pin Number	Signal Name	Signal Source
4	DTR	NVC/DM
5	ISOGND	(Common)
6	CLKOUT	NVC/DM
7	RTS	NVC/DM
8	CTS	External equipment
9	CLKIN	External equipment

Table A56: DB9 Pinout—RS232 Connection—NVC/DM ***(Continued)***

RS485 Connection

Pin Number	Signal Name	Signal Source
1	RxD–	External equipment
2	RxD+	External equipment
3	TxD+	NVC/DM
4	TxD–	NVC/DM
5	ISOGND	(Common)
6	CLKOUT+	NVC/DM
7	CLKOUT–	NVC/DM
8	CLKIN–	External equipment
9	CLKIN+	External equipment

Table A57: DB9 Pinout—RS485 Connection—NVC/DM

A.12.7.3 Production Port

This port is a male DB9 connector on the front edge of the card (see figure A.51). Signal levels are to RS232-C standard and the connector pinout is shown in table A58. This port is only enabled when the NVC/DM is in Maintenance mode.

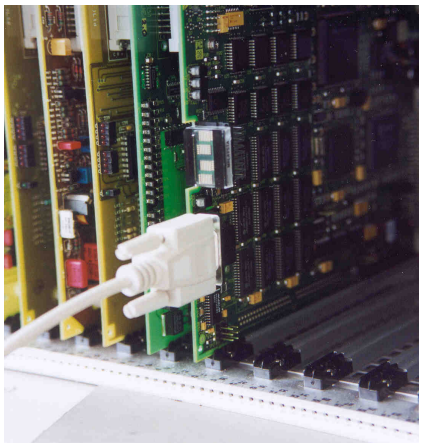

Figure A.51: Production Port—NVC/DM

Pin Number	Signal	Comment
1	N/C	
2	RxD input	
3	TxD output	
4	N/C	
5	Common	
6	N/C	
7	RTS output	(Always active)
8	MAINT input	(Selects maintenance mode)
9	SPEED input	(Selects maintenance mode data transfer rate)

Table A58: DB9 Pinout—Production Port—NVC/DM

A.12.7.4 Cabling Details

A cable with any of the configurations in figure A.52 will allow a personal computer to connect to the:

- production port (a DB9 connector on the front edge of the LEC);
- diagnostic port (a DB9 connector at the rear of the housing).

The interconnection of pins 7, 8 and 9 on the Maintenance cable has no effect when the cable is connected to a Diagnostic port. When the cable is plugged into the Production port, the interconnection makes the NVC/DM switch to its Maintenance mode of operation and selects the 115 kbps data transfer rate.

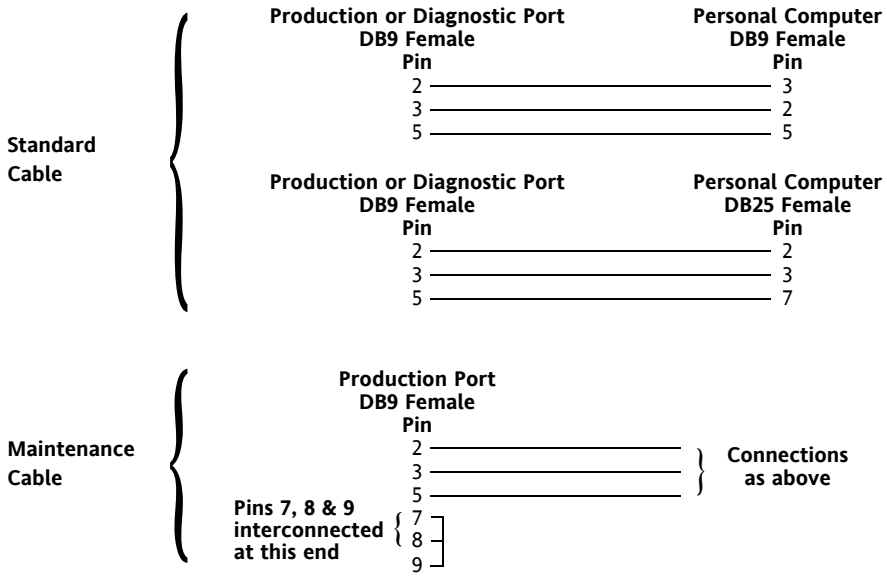

Figure A.52: Cable Configuration Details—NVC/DM

A.12.7.5 Connecting a Diagnostic System

Most WESTRACE installations will have a permanently connected MoviolaW. Some installations allow remote access via Hayes compatible modem.

Types of Diagnostic System

Two diagnostic systems are available:

- MoviolaW—a Microsoft Windows based user friendly utility;
  Provides the following services:
  - Real time graphical display of the state of the interlocking;
  - Records for later playback, events (logic state changes) which occur after MoviolaW commences running;
  - Extraction of historical fault information from an NVC/DM (although not historical event or operation information);
  - Basic maintenance functions such as setting the time and displaying telemetry statistics;
- GETLOG—a command line driven utility;
  Provides the following services:
  - Extraction of historical and real time event, fault and operation information which is displayed and stored in text form;
  - Basic maintenance functions such as setting the time and displaying telemetry statistics;
  - More straight forward to install and configure than MoviolaW;
  - Can support larger systems than can MoviolaW.

Requirements

You will need:

- A personal computer (PC) loaded with MoviolaW or GETLOG;
- The MoviolaW display files for the particular installation;

  For GETLOG, it is useful to have the Non-vital Configuration image (`.img`) files for the installation;
- The passwords for accessing the particular NVC/DM;

  For MoviolaW, the passwords for a particular NVC/DM are stored in the MoviolaW `.ini` file, and are configured using the MoviolaW NVC/DM driver software;

  For GETLOG, the password must be specified on the command line;
- A cable to connect the serial port(s) on the PC and the Diagnostic port. See figure A.52;
- The user manual for the chosen diagnostic system.

Procedure

a) Connect the PC to a configured diagnostic port at the rear of the housing. See figure A.50 and refer to the local documentation;

b) Start up the chosen diagnostic system;

c) Follow the guidelines for fault finding.

A.13 Non-vital Communications Module (NVC)

A.13.1 Description

The NVC module is a serial data link interface for communication with a local, or remote non-vital control system.

The module communicates synchronous serial data using the WESTRONIC S2 communication protocol. It is normally used to receive controls and return indications to a remote control centre, typically a CTC system. It would either be interfaced to a digital circuit, or to an analogue line using an appropriate modem. It may also be used to interface to a local panel. The NVC operates as a slave device on a master/slave communication regime. It is set with a unique slave address and will only act on data that matches this setting. It will then respond with indication status as defined in the application logic.

The S2 protocol allows S2 fields and WESTRACE NVC modules to communicate on a single communication bearer. NVC modules with tri-state communications output to the bearer using tri-state circuits, and are enabled only when required to place signals on the bearer.

Appropriate bearer interface arrangements must be used where multiple systems are connected to a single bearer. Appropriate tri-state NVC modules must be used.

A.13.2 Particulars

The NVC is comprised of a single printed circuit board. The circuit board has configuration DIP switches which are used to select the NVC's slave address, data transfer rate, data word length and other configuration parameters.

A.13.3 Function

The NVC derives power for its communication circuits from an external 24 Vdc supply. This power supply may be provided by either the OPC (as part of the VLM) or by another source, depending upon the application. Removal of this voltage positively prevents the NVC from transmitting and receiving data.

The NVC is processor based and it interfaces with the VLM. It performs the self-testing and housekeeping functions for the module.

Clock Reconstruction

NVC modules with clock reconstruction should be used when there is no external clock signal (RxC) available. NVC modules capable of clock reconstruction can internally generate the clock signal from received data. The clock signal may be used for communication without using a modem.

Supplying an external clock signal, if available, to an NVC module (without clock reconstruction) will normally provide superior performance. Also see section A.13.4.7.

A.13.4 Configuration

Configuration of the NVC is achieved by the setting of the two switch banks shown below. Refer to the WESTRACE NVC module configuration in the system schematics for the particular WESTRACE installation.

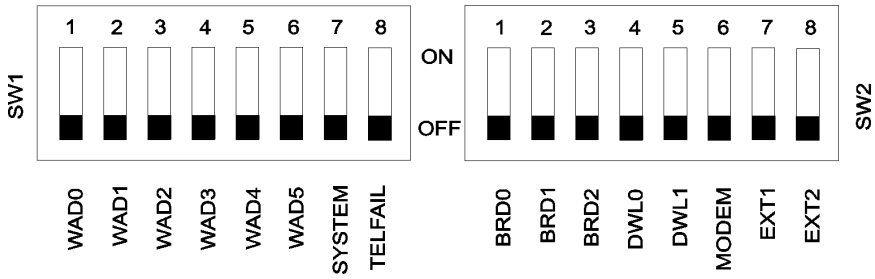

Figure A.53: Configuration Switches—NVC

A.13.4.1 Slave Address

The module's S2 address is configured by SW1/1 to SW1/6 (WAD0–WAD5) where WAD5 is the most significant bit of the 6 bit address, eg for an address of 21 octal the switches are set as follows:

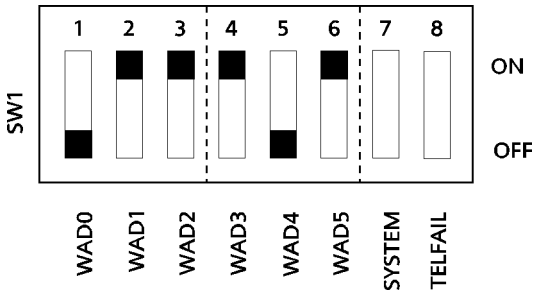

Where: On = 0
Off = 1

Figure A.54: Slave Address—Setting—NVC

The example shown above from WAD5–WAD0 gives 010 001 (21 octal, or 17 decimal).

A.13.4.2 System Bit

The system bit switch is used to determine in which telemetry system the NVC is operating. This facility is configured by SW1/7 (System). The system bit is a logical 1 when this switch is *On*.

A.13.4.3 Telfail

The Telfail switch is used to determine whether a telemetry failure indication will be passed from the NVC to the VLM for processing by the Application Data. This facility is configured by SW1/8 (Telfail). Telfail processing is required when this switch is *On*.

Note: ***Do not use control bit 0 (zero) for an application when the Telfail switch is set to On. The NVC automatically sets this bit in response to a failure to transmit or receive data.***

The NVC will output a frame if not correctly addressed within a 30 second period.

A.13.4.4 Data Transfer Rate

The data transfer rate is configured by SW2/1 to SW2/3. The switches enable selection of different data transfer rates depending upon the telemetry system configuration. The switches are set as follows:

Data Transfer Rate (bits per second)	BRD0 SW2/1	BRD1 SW2/2	BRD2 SW2/3
600	On	On	On
1200	Off	Off	Off
2400	On	Off	Off
4800	Off	On	Off

Table A59: Data Transfer Rate—Setting—NVC

All other configurations are illegal.

NVC232 and NVC422 modules which offer clock reconstruction are fitted with daughter boards which must also be configured for data transfer rate.

The daughter board links are positioned as shown by figure A.55. The data transfer rate selection is made according to the illustration.

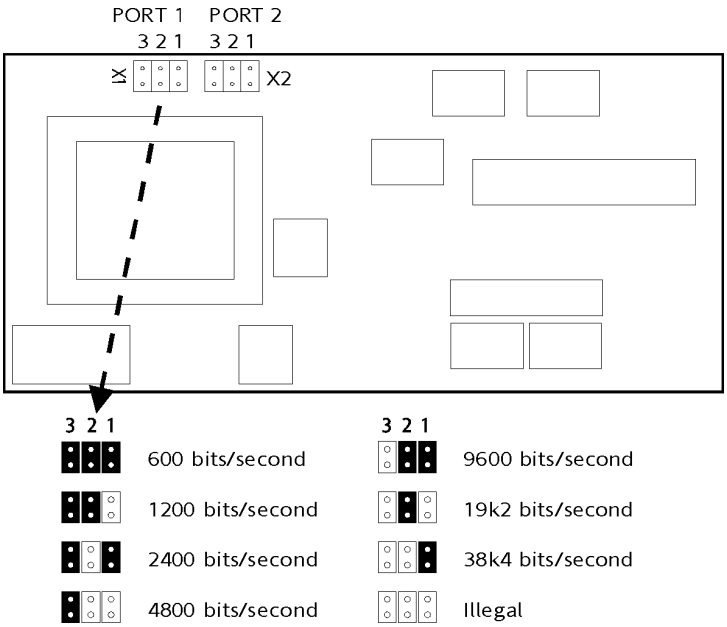

Figure A.55: Clock Reconstruction Daughter Board—NVC

A.13.4.5 Data Word Length

The data word length is configured by SW2/4 to SW2/5 (DWL0–DWL1). These switches enable selection of different data word lengths depending upon the telemetry system configuration.

The switches can be set as follows:

Data Word	DWL0 SW2/4	DWL1 SW2/5
64	Off	Off
32	On	Off
48	Off	On
128	On	On

Table A60: Data Word Length—Setting—NVC

S2 systems are typically set to 64 bit data word length.

A.13.4.6 Modem

The modem switch is used to determine whether modem handshaking is required. This facility is configured by SW2/6 (modem). Modem handshaking *is* required when this switch is *On*.

A.13.4.7 Transmit Data Clock

The source of the transmit clock can be selected by setting the Ext1 switch on SW2 thus:

Switch Position 7 = OFF — Internal clock—transmit data clock is internally generated without reference to received signals. Typically when NVC is connected to a modem.

Switch Position 7 = ON — External clock—used when interfacing to carrier communication systems that require synchronised clocks for both transmitted and received data.

The NVC takes an external receive data clock and generates both the transmit data clock and the transmit data from it.

Applies to:

- NVC 422 (modem) module (3650 1139 10) Issue 1.3 and later;
- NVC 422 (no modem) module (3650 1139 11) Issue 2.0 and later.

A.13.4.8 Unused

Ext2 switch on SW2 is not used by the NVC and should be set Off.

A.13.5 Indications

A.13.5.1 Start Up

Diagnostic LEDs display the module type code, followed shortly by a firmware version code (reflecting the firmware version installed in the module). The firmware version is displayed for approximately 8 seconds, after which all diagnostic LEDs will extinguish.

There are four additional LEDs on the NVC. They are used to indicate correct operation of the telemetry. The telemetry is connected to serial channel A; serial channel B is not used. There is one LED for transmit and one for receive. These LEDs are labelled on the PCB as TxDAI and RxDAI respectively.

A.13.5.2 Operation

The module will commence flashing the green watchdog LED to indicate the module is operational and working correctly.

When the NVC is receiving valid SDLC telemetry messages, the RxDAI will flash for 20 to 30 milliseconds. This LED will flash irrespective of whether the telemetry message is addressed to the NVC.

The NVC will transmit an indication message when it receives a valid SDLC telemetry message with an address that matches the address set by the switches WAD0–WAD5.

After the message is sent, the NVC flashes the TxDAI LED for 20 to 30 milliseconds.

A.13.5.3 Fault Codes

CODE(H)	FAULT DESCRIPTION	ACTION
00	No Fault	Not a fault
02	Module Type Error	Replace NVC
03	EPROM Checksum Error	"
04	Stack Guard Error	"
05	RAM Error	"
06	Interrupt Error	"
07	Termination Error	"
08	Processor Error	"
09	Stack Error	"
0A	Run Time Error A	"
0B	Run Time Error B	"
0C	Run Time Error C	"
0D	Run Time Error D	Replace NVC
0E	Run Time Error E	"

Table A61: Fault Codes—NVC

CODE(H)	FAULT DESCRIPTION	ACTION
0F	Run Time Error F	"
10	Run Time Error G	"
11	Run Time Error H:	"
12	Run Time Error I	"
13	Run Time Error J	"
14	Run Time Error K	"
15	Run Time Error L	"
16	Run Time Error M	"
17	Run Time Error N	"
18	Run Time Error O	"
19	Run Time Error P	"
1A	Run Time Error Q	"
1B	Run Time Error R	"
1C	Run Time Error S	"
1D	Run Time Error T	"
1E	Run Time Error U	"
1F	Run Time Error V	"
20	Run Time Error W	"
21	Run Time Error X	"
22	Run Time Error Y	"
23	Run Time Error Z	"
24	IMB Timeout Error	"
25	IMB Address Error	"
26	IMB Address Parity Error	"
27	IMB CI Transfer Error	"
28	IMB Transfer Type Error	"
29	IMB Message Length Error	"
2A	IMB True Byte Error	"
2B	IMB Check Message Error	"
2C	IMB Inconsistency Error	"
30	Module Type and Fault Code Error	"
31	ST IMB Start Up Timeout	"
32	ST IMB Too Few IMB Calls	Replace NVC
33	ST IMB Too Many IMB Calls	"
34	ST IMB Too Few ST Calls	"
80	Illegal data transfer Rate Configuration	Check data transfer rate switches

Table A61: Fault Codes—NVC ***(Continued)***

A.13.6 External Connections

A.13.6.1 RS232-C Connections

External Connections to the NVC232 are made via the SIO232PFM.

The SIO232 PFM External Connectors are a DB25 plug and socket for RS232 interface, and a 2 way plug and socket Klippon type BLA/SLA for power.

Figure A.56 depicts the external connection details of the SIO232 PFM.

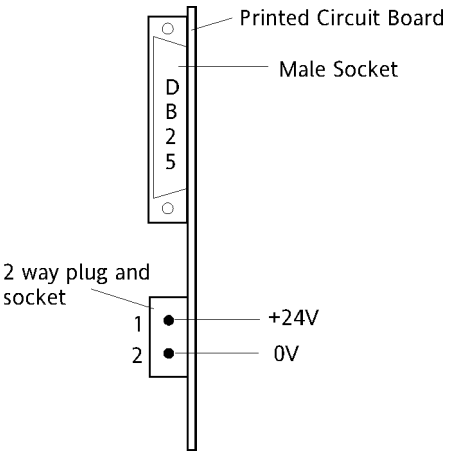

Figure A.56: External Connections—SIO232 PFM—NVC

Pin	Function
1	Chassis Ground
2	Transmit Data (TxD)
3	Receive Data (RxD)
4	Request to Send (RTS)
5	Clear to Send (CTS)
7	Signal Ground (GND)
8	Data Carrier Detect (DCD)
17	Receive Clock (RxC)
20	Data Terminal Ready (DTR)
24	Transmit Clock (TxC)

Table A62: DB25 Pinout—SIO232 PFM—NVC

This module communicates using RS232-C and is configured as a DTE.

A.13.6.2 RS422 Connections

External Connections to the NVC422 are made via the SIO422PFM.

The SIO422 PFM External Connectors are a 14 way ribbon header for RS422 interface, and a 2 Way plug and socket Klippon type BLA/SLA for power.

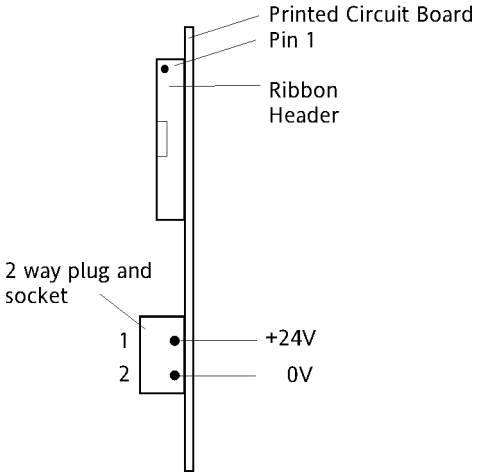

Figure A.57: External Connections—SIO422 PFM—NVC

Figure A.58 and table A63 show the RS422 pin numbering.

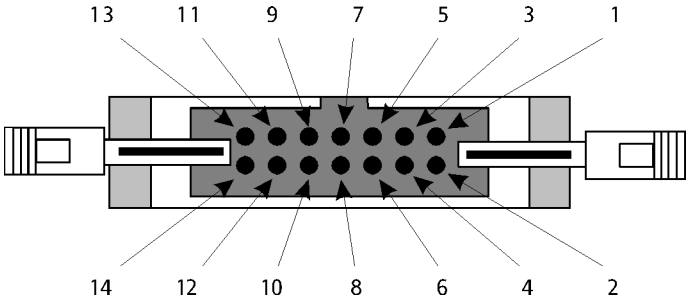

Figure A.58: RS422 Connector Pin Numbering—SIO422 PFM—NVC

Pin	Function
1	0 Volts (O V)
2	Received Clock + (RxC +)
3	Received Clock - (RxC -)
4	Transmit Clock + (TxC +)
5	Transmit Clock - (TxC -)
6	Data Carrier Detect (DCD)
7	Not Used
8	Transmit Data + (TxD+)
9	Transmit Data - (TxD-)
10	Receive Data + (RxD+)
11	Receive Data - (RxD-)
12	Clear to Send (CTS)
13	Request to Send (RTS)
14	0 Volts (O V)

Table A63: 14-Way Ribbon Header Pinout—SIO422 PFM—NVC

A.14 Diagnostic Module (DM)

A.14.1 Description

The is DM used with older VLM modules. It comprises a single printed circuit board and provides two user interfaces, the Technician Interface, and the Event Recorder Interface.

A.14.2 Particulars

Both interfaces are RS232 compatible, and may connect to a dumb terminal. The Event Recorder interface permits the recording of all change of state information and may optionally be connected to a serial storage device or printer. The Technician Interface permits the user to interrogate the VLM's logic states, and display system data pertaining to the particular installation.

Only one DM module can be installed in a system. Its position is allocated by the GCSS or CSS to slot 15 in housing 1.

A.14.3 Function

The DM permits the user to interrogate the WESTRACE system via the Technician Interface. The operation of the Technician Interface is defined in Appendix B. The Event Recorder Interface permits all change of state information relating to the WESTRACE installation to be recorded.

The DM is capable of storing up to 800 prior change of state events, and the most recent module faults in battery-backed non-volatile RAM. The DM has its own Real Time Clock for time and date stamping of events and faults. The time and date are set via the Technician Interface.

The DM does not require external power for communications.

The DM is processor based and it interfaces with the VLM. It performs the self-testing and housekeeping functions for the module.

A.14.4 Operation

During the power up initialisation period following a system reset (and provided no faults are detected), a WESTRACE module writes the following data to its fault code latch:

- backplane address;
- software version number;
- clear fault code values.

The DM polls each module in turn to read this information and it only stores changes to the information. The DM stores the changes it sees first, and since it polls each of the WESTRACE modules in turn, the stored change may not be the first that occurred. In other words, changes recorded in one cycle are in the order they were read, not necessarily the order in which they occurred.

A.14.5 Configuration

For full details of the configuration applicable to this installation, refer to the folders in the Signalling Equipment Room.

Configure the module for the installation using the configuration switch SW1.

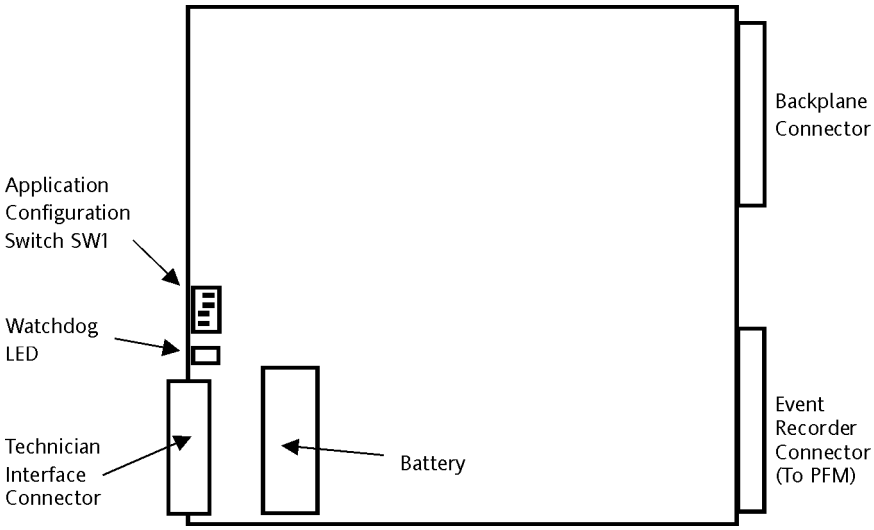

Figure A.59: Layout—DM Module

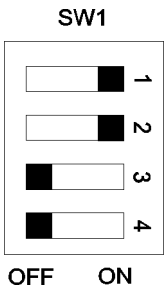

Figure A.60: Configuration Switch—DM Module

A.14.5.1 Data Transfer Rate

The data transfer rates for the Event Recorder interface and the Technician Interface are configured by SW1/1 and SW1/2. These switches are set as follows:

Technician Interface Data Transfer Rate

1200	SW1/1	Off
4800	SW1/1	On

Event Recorder Interface Data Transfer Rate

1200	SW1/2	Off
4800	SW1/2	On

All other switches are not used by the Diagnostic Module and must be set to Off.

A.14.5.2 Battery Installation

A battery is used to maintain data in non-volatile memory during normal operation. The DM is shipped with the battery disconnected so the link adjacent to the negative terminal of the battery (Link 17) must be fitted before the System is powered up.

To prolong battery life, Link 17 should be removed when the unit is taken out of service and put into storage, but only after any data has been extracted.

Handling Lithium Batteries

Observe the instructions elsewhere in this manual.

A.14.6 Indications

A.14.6.1 Start Up

Diagnostic LEDs display the module type code, shortly followed by a firmware version code (reflecting the firmware version installed in the module). The firmware version is displayed for approximately 8 seconds, after which all diagnostic LEDs will extinguish.

Ignore the Red LED that is near the green Watchdog LED.

A.14.6.2 Operation

The module will commence flashing the green watchdog LED to indicate the module is operational and working correctly.

Ignore the RED LED that is close to the green Watchdog LED.

A.14.6.3 Fault Codes

None

A.14.7 External Connections

External Connections to the DM are made via the SIO232PFM for the Event Recorder and via the front of the DM module for the Technician Interface.

A.14.7.1 Event Recorder Interface

The SIO232 PFM External Connectors are a DB25 plug and socket for RS232 interface, and a 2 way plug and socket Klippon type BLA/SLA (not used).

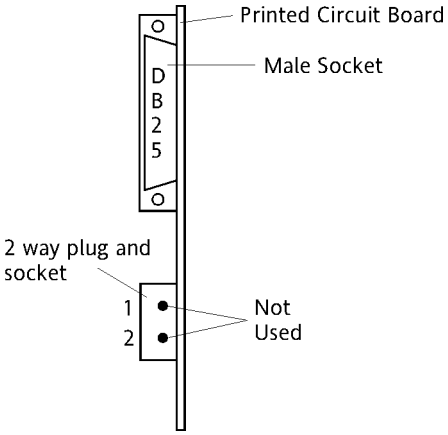

Figure A.61: External Connections—SIO232 PFM—DM Module

Pin	Function
2	Transmit Data (TxD)
5	Clear to Send (CTS)
7	Signal Ground (GND)

Table A64: DB25 Pinout—Event Recorder Interface—SIO232 PFM—DM Module

Signal

The Signal is simplex asynchronous, data output only, and is selectable from 1200 bits/s or 4800 bits/s. It comprises 1 start bit, 7 data bits, 1 parity bit, even, and 1 stop bit.

A.14.7.2 Technician Interface

The Technician Interface is a DB25 connector on the front edge of the DM module.

Pin	Function
2	Transmit Data (TxD)
3	Receive Data (RxD)
7	Signal Ground (GND)

Table A65: DB25 Pinout—Technician Interface—DM Module

Signal

The Signal is Duplex Asynchronous, selectable from 1200 bits/s or 4800 bits/s and comprises 1 start bit, 7 data bits, 1 parity bit, even, and 1 stop bit.

A.14.7.3 Cabling Details

A cable with one of the following configurations will allow the connection of a personal computer to either the technician interface or the event recorder interface.

Diagnostic Module DB25 Female Pin		Personal Computer DB25 Female Pin
2	———	3
3	———	2
7	———	7

Diagnostic Module DB25 Female Pin		Personal Computer DB9 Female Pin
2	———	2
3	———	3
7	———	5

Figure A.62: Interface Cable Configuration—DM Module

A.15 Diagnostic Module 128 (DM128)

A.15.1 Description

The DM128 is used with the Hot Standby Vital Logic Module (HVLM128). It comprises a single printed circuit board and provides two user interfaces, the Technician Interface, and the Event Recorder Interface.

A.15.2 Particulars

Both interfaces are RS232 compatible, and may connect to a dumb terminal or a personal computer running MoviolaW. The Event Recorder interface permits the recording of all change of state information and may optionally be connected to a serial printer or other RS232 device. The Technician Interface permits the user to interrogate the HVLM128's logic states, and display system data pertaining to the particular installation.

Only one DM128 module may be installed in a system. Its position is preallocated to slot 15 in housing 1.

A.15.3 Function

The DM128 permits the user to interrogate the WESTRACE system via the Technician Interface. The operation of the Technician Interface is defined in Appendix B. The Event Recorder interface permits all change of state information relating to the WESTRACE installation to be recorded.

The DM128 is capable of storing up to 8030 previous change of state events, and the most recent module faults in battery-backed non-volatile RAM. The DM128 contains its own Real Time Clock for time and date stamping of events and faults. The time and date are set via the Technician Interface.

The DM128 does not require external power for communications.

The DM128 is processor based and it interfaces with the HVLM128. It performs self-testing and housekeeping functions for the module.

A.15.4 Operation

During the power up initialisation period following a system reset (and provided no faults are detected), a WESTRACE module writes the following data to its fault code latch:

- backplane address;
- software version number;
- clear fault code values.

The DM128 polls each module in turn to read this information and it only stores changes to the information. The DM128 stores the changes it sees first, and since it polls each of the WESTRACE modules in turn, the

stored change may not be the first that occurred. In other words, changes recorded in one cycle are in the order they were read, not necessarily the order in which they occurred.

A.15.5 Configuration

The DM128 is fitted with links or switches as depicted in figure A.63 (later modules have only soldered links preset to 4800 bps).

Configure the module for the installation using:

- links — if switch SW1 is not fitted;
- switches — if switch SW1 is fitted.

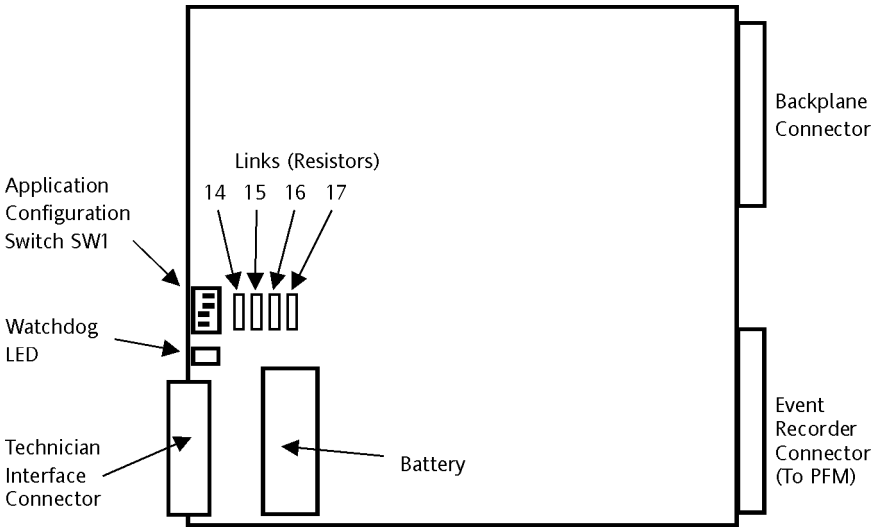

Figure A.63: Layout—DM 128

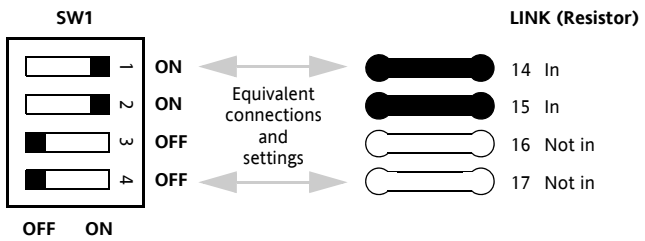

Figure A.64: Links or SW1 Switches—Default Settings—DM128

The SW1 switches 1, 2, 3, and 4 are connected in parallel with the links LK14, LK15, LK16 and LK17, respectively. If a module is fitted with SW1 switches, always use the switches in preference to the links. A switch 'On' corresponds to a link 'In'.

For full detail of the configuration applicable to an installation, refer to the folders in the Signalling Equipment Room. The default settings for the links LK14, LK15, LK16 and LK17 parallel to the power supply are described in the sections that follow. Although links are described, use the equivalent switches (see figure A.64) if SW1 is present.

A.15.5.1 Data Transfer Rate

The data transfer rates for the event recorder interface and the technician interface are configured by LK14 and LK15. The links are set as follows:

Data Transfer Rate	LK14	LK15
1200 bps	Out	Out
2400 bps	In	Out
9600 bps	Out	In
4800 bps (default)	In	In

Table A66: Data Transfer Rate — Setting — DM128

A.15.5.2 Mnemonic Selection Default

The language used by the DM128 is configured by LK16. The link is set as follows:

Printed / Displayed	LK16
Mnemonic Names (default)	Out
Mnemonic Numbers	In

Table A67: Mnemonic Language — Setting — DM128

A.15.5.3 Command Echo Default

The echoing of commands by the DM128 is configured by LK17. The link is set as follows:

Commands	LK17
Echo Commands (default)	Out
Commands Not Echoed	In

Table A68: Echo Command — Setting — DM128

A.15.5.4 Battery Installation

A battery is used to maintain data in non-volatile memory during normal operation. The DM128 is shipped with the battery disconnected so LK18 (operate/ship jumper) must be moved to the 'operate' position before the system is powered up.

To prolong battery life, LK18 should be moved to the 'ship' position if the module is to be taken out of service and put into storage, but only after any data has been extracted.

Dual battery plugs are provided so that the data in non-volatile memory is maintained while changing the battery. The replacement battery should be fitted to the second battery plug before removing the original (flat) battery. This will ensure power is always available to the non-volatile memory.

Caution: ***Do not leave both batteries connected for any longer than necessary to affect the change or you might reduce the life of the new battery.***

Handling Lithium Batteries

Observe the instructions elsewhere in this manual.

A.15.6 Indications

A.15.6.1 Start Up

None.

A.15.6.2 Operation

The module will commence flashing the green watchdog LED to indicate the module is operational and working correctly.

Ignore the red LED that is close to the green Watchdog LED.

A.15.6.3 Fault Codes

None

A.15.7 External Connections

External Connections to the DM128 are made via the SIO232PFM for the Event Recorder and via the front of the DM module for the Technician Interface.

A.15.7.1 Event Recorder Interface

The SIO232 PFM External Connectors are a DB25 plug and socket for RS232 interface, and a 2 way plug and socket Klippon type BLA/SLA (not used).

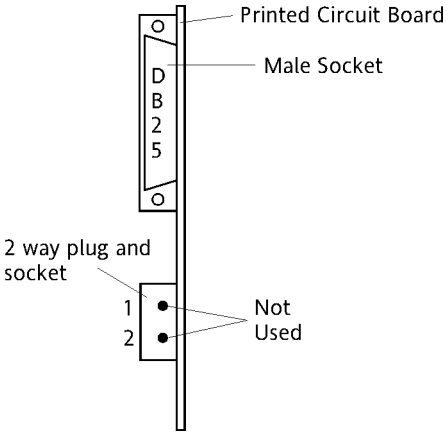

Figure A.65: External Connections—SIO232 PFM—DM128

Pin	Function
2	Transmit Data (TxD)
5	Clear to Send (CTS)
7	Signal Ground (GND)

Table A69: DB25 Pinout—Event Recorder Interface—SIO232 PFM—DM128

Signal

The Signal is simplex asynchronous, data output only, and is selectable from 1200 bits/s or 4800 bits/s. It comprises 1 start bit, 7 data bits, 1 parity bit, even, and 1 stop bit.

A.15.7.2 Technician Interface

The Technician Interface is a DB25 connector on the front edge of the DM module.

Pin	Function
2	Transmit Data (TxD)
3	Receive Data (RxD)
7	Signal Ground (GND)

Table A70: DB25 Pinout—Technician Interface—DM128

Signal

The Signal is Duplex Asynchronous, selectable from 1200 bits/s or 4800 bits/s and comprises 1 start bit, 7 data bits, 1 parity bit, even, and 1 stop bit.

A.15.7.3 Cabling Details

A cable with one of the following configurations will allow the connection of a personal computer to either the technician interface or the event recorder interface.

STANDARD CABLE

DM128 Module DB25 Female Pin		Personal Computer DB25 Female Pin
2	----------	3
3	----------	2
7	----------	7

DM128 Module DB25 Female Pin		Personal Computer DB9 Female Pin
2	----------	2
3	----------	3
7	----------	5

MoviolaW CABLE

DM128 Module DB25 Female Pin		Personal Computer (COM2) DB25 Female Pin		Personal Computer (COM1) DB25 Female Pin
2	----------	3		
7	----------	7	----------	7
8	----------		----------	2
24	----------		----------	3

DM128 Module DB25 Female Pin		Personal Computer (COM2) DB9 Female Pin		Personal Computer (COM1) DB9 Female Pin
2	----------	2		
7	----------	5	----------	5
8	----------		----------	3
24	----------		----------	2

These cables are suitable for MoviolaW 95 & MoviolaW NT

Figure A.66: Interface Cable Configuration—DM128

A.16 Power Supply Unit (PSU)

A.16.1 Description

The PSU converts the incoming 24 V supply to the voltage levels required for by all WESTRACE modules.

A.16.2 Particulars

The PSU comprises a single printed circuit board.

A.16.3 Characteristics of PSU 24

Input Voltage Range 20–30 Vdc

Output Voltages as shown:

+ 5 Vdc	@	5 A max
+12 Vdc	@	0.5 A max
–12 Vdc	@	0.5 A max
+12 V Power	@	2.5 A max

Only one PSU can be installed per system housing, however additional PSUs may (optionally) be installed in other housings in multiple housing installations.

The PSU has a pre-assigned position on the VLE backplane. All other positions are occupied by other modules or blanker cards.

A.16.4 Function

The PSU generates the internal power supply voltages, and contains the System Reset line for other VLE modules.

The PSU is not processor based and therefore does not perform self-tests and does not participate in Health Monitoring functions.

The absence of any voltage, or a departure from the voltage specification will lead to the system reset line becoming active which will force a system reset.

A.16.5 Configuration

None

A.16.6 Indications

The PSU contains five red LEDs, which indicate the presence of the input and output voltages. All LEDs should be illuminated when power is applied to the system.

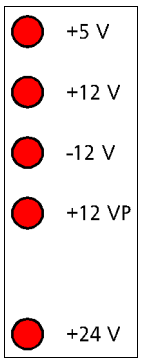

Figure A67: Power Indicator LEDs—PSU

A.17 Protection and Filter Modules (PFMs)

A.17.1 Description

PFMs are used to isolate the clean internal WESTRACE environment from the 'dirty' external electrical environment by providing screening, filtering and overvoltage protection.

The WESTRACE housing must be fully enclosed and earthed to protect the internal environment from external EMI. Inputs to the system, and outputs from the system have to pass through this barrier so an input/output module specific PFM is used to isolate WESTRACE from external interference. By screening incoming and outgoing signals in this way, the effects of conducted EMI are considerably reduced.

As the PFM is a vital module. PCB tracks are arranged so that short circuits between adjacent tracks will not cause a wrong side failure.

A.17.2 Configuration

None.

A.17.3 Indications

None.

A.18 VLE Backplane

A.18.1 Description

The VLE Backplane is used to interconnect all system modules in the VLE. It comprises a single printed circuit board with parallel tracks and female DIN connectors which straddle those tracks. WESTRACE modules plug into the DIN connectors.

There may be up to four housings and VLE backplanes in a single WESTRACE installation. Each backplane is fitted with DB37 connectors for connection to other VLE backplanes. Special cabling is used for interconnecting backplanes where more than one system backplane is required.

A.18.2 Configuration

Refer to the circuit book in the Signal Equipment Room for information regarding the link settings on the backplane.

A.18.3 Indications

None.

A.19 Blanker Card

A.19.1 Description

Blanker cards are used to maintain continuity of vital signals across the VLE backplane. A blanker card and a PFM blanker plate must be fitted in any unused input/output module slot.

A.19.2 Configuration

None.

A.19.3 Indications

None.

A.20

A.21 Housing Systems

There are four system configurations of WESTRACE. The maintenance technician may need to check that the cables (EC1, EC2 etc) are correctly fitted and that the links (LK1, LK2, LK3 and LK4) are either installed or not. Compare figures A.68 to A.71 with the actual installations.

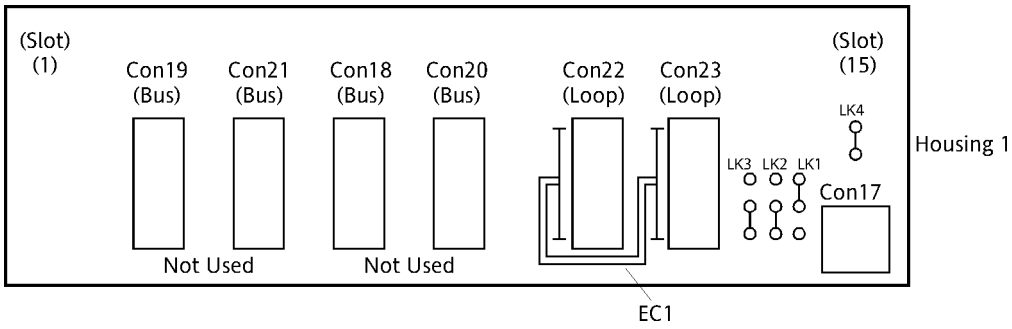

Figure A.68: Single Housing System

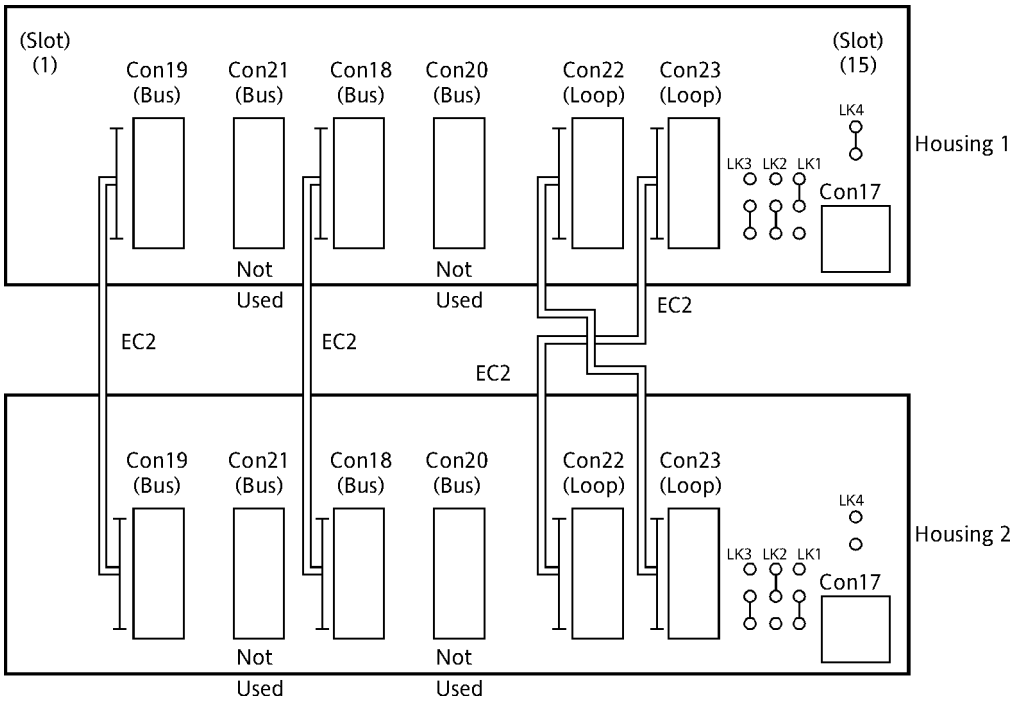

Figure A.69: Two Housing System

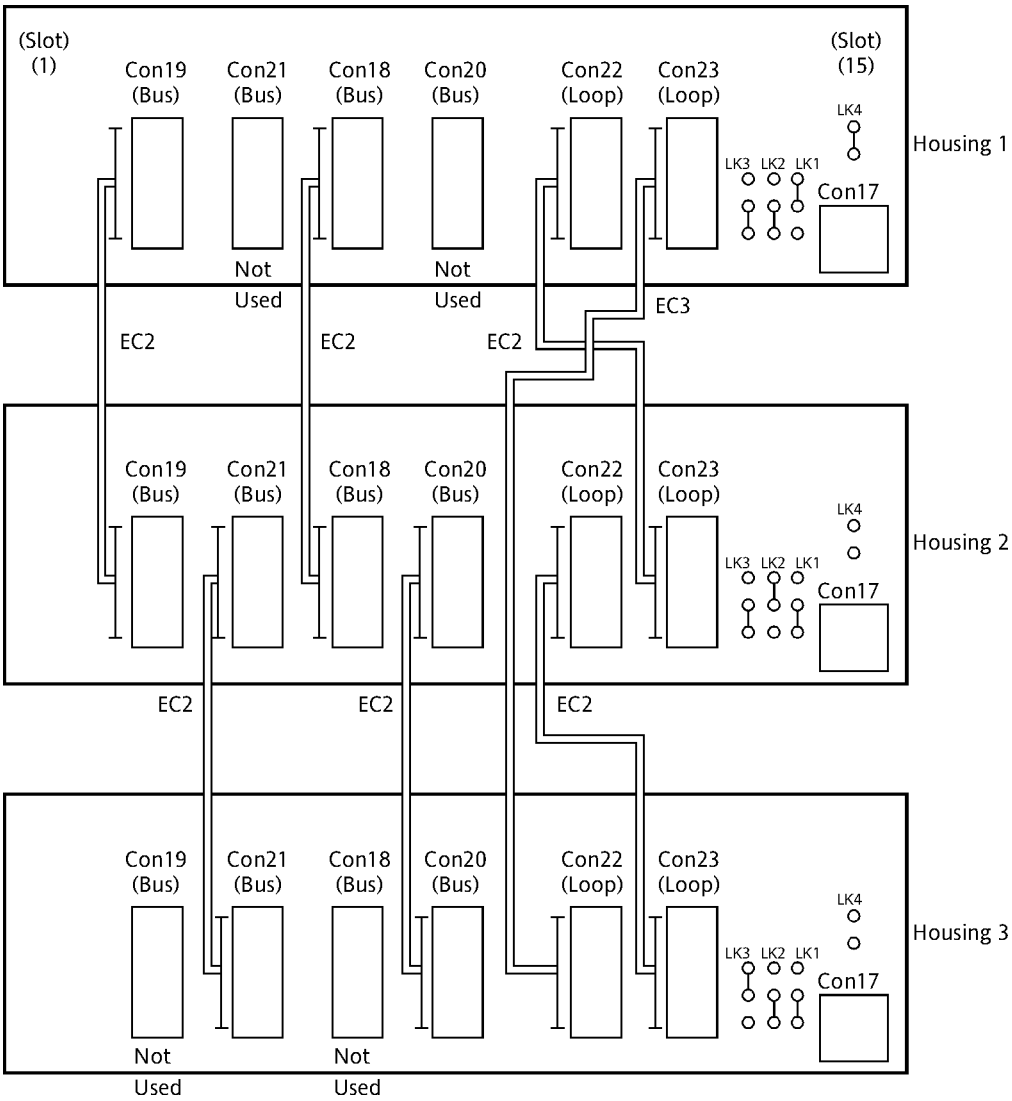

Figure A.70: Three Housing System

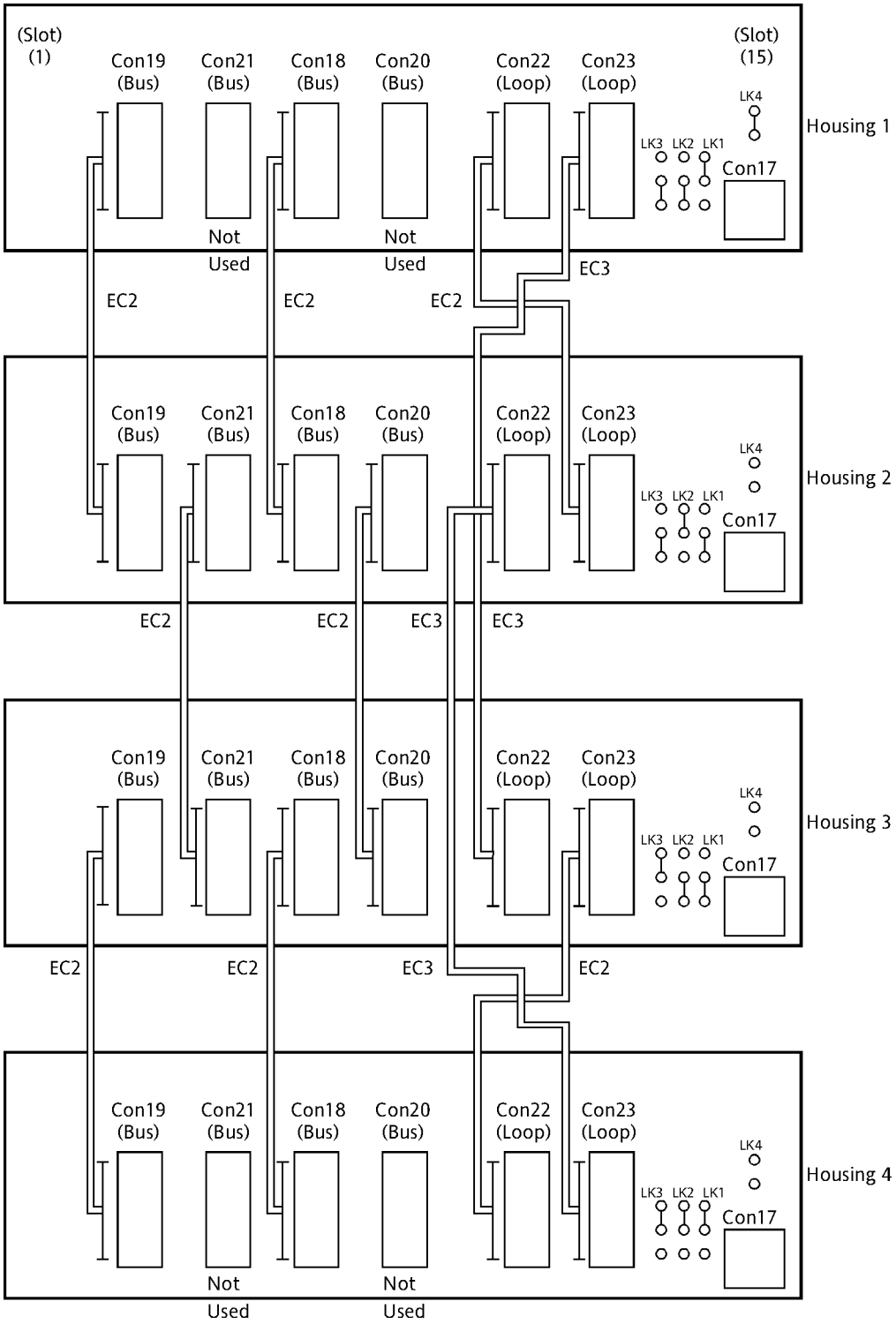

Figure A.71: Four Housing System

A.22

APPENDIX B—DIAGNOSTIC MODULE TECHNICIAN INTERFACE

This appendix describes the fundamental features of the Diagnostic Module Technician Interface.

The information herein only applies to the DM and DM128 Diagnostic Modules.

B.1 General Description

The Diagnostic Module has two serial ports for system diagnostics:

- *Event Recorder*—serial port at the rear of the Diagnostic Module.

  This interface provides a continual stream of data containing change-of-state information about the operation of the installation. It can be connected to a PC running MoviolaW, a dumb terminal, serial printer or mass storage device.
- *Technician Interface*—serial port at the front of the Diagnostic Module.

  This interface provides access to the information stored in the Diagnostic Module. Access is through the use of commands entered on a terminal or through a PC running MoviolaW.

  Commands entered through a terminal are concluded by pressing the ENTER or RETURN key. Commands entered through MoviolaW are via a Windows NT dialog box and the command is sent by using the appropriate control button.

Note: ***The command echo default switch SW1/4 on the DM128 module must be set to the OFF position to execute these functions. There is no equivalent switch on the DM module.***

B.2 Event Recorder Interface

The Event Recorder monitors the following WESTRACE Installation information:

- CLEAR — Clear Stored Information.
- DATE_TIME — Diagnostic Module Date and Time Reference
- EVENT — VLE Mnemonic States.
- EVENT — Overflow of Event buffer
- FAULT — WESTRACE System Fault Information.
- FAULT — Overflow of Fault buffer
- MODULE — WESTRACE Module Information
- VLE_DATA — VLE Status Information.

B.2.1 CLEAR

The Clear Information is generated by a `CLEAR` command sent to the Technician Interface.

A typical response is:

```
CLEAR 23:MAY at 13:56:00 Event NVRam Cleared
```

The response contains the current date and time followed by what information was cleared.

B.2.2 DATE_TIME

The Date Time information is generated when the date or time is changed by a command sent to the Technician Interface at midnight.

A typical response is:

```
DATE_TIME  21:MAY at 00:00:00

DATE_TIME  21:JUL at 12:09:54 Year 91
```

The information contains the current date and time. The year is also displayed when the date or time is changed.

B.2.3 EVENT

The Event Information is generated whenever a mnemonic state changes or a buffer overflow occurs.

For example:

```
EVENT    13:MAR at 04:05:10 - 0010 Changes
            OP2J-0,  OP2JR-1,  OP9JR-1,    OP1-1,
            OP2-0,   OP3-1,    OP4-0,      OP5-0,
            HGE-0,    DGE-1
```

The information contains the current date and time followed by the number of changes, and the logic states which changed with their new state.

```
EVENT    09:DEC at 01:08:04 NVRam Overflow. Events lost
```

The information contains the current date and time followed by what information has been overflowed or lost.

B.2.4 FAULT

The Fault Information is generated whenever a WESTRACE fault is detected or a buffer overflow occurs.

For example:

```
FAULT    11:DEC at 11:35:17 NVC232    is 01H
            in Housing 1 at Slot 12 with Software Version 1
```

The information contains the current date and time followed by the module name, the fault description, details of the module location and software version.

```
FAULT    06:JAN at 12:08:43 NVRam Overflow. Faults lost
```

The information contains the current date and time followed by what information has been overflowed or lost.

B.2.5 MODULE

The module information is generated once all of the details have been received by the Diagnostic Module from the VLM/HVLM.

For example:

```
MODULE   12:DEC at 10:00:51, 03 Modules in Installation
         DM -------------------  with Software Version 01
         VLM/HVLM in Housing 1 at Slot 03 with Software
                                                  Version 01
         NVC       in Housing 1 at Slot 04 with Software
                                                  Version 02
```

The information contains the current date and time followed by the number of modules in the installation and each module's details.

B.2.6 VLE_DATA

The VLE status information will be displayed during various phases of operation.

For example:

```
VLE_DATA    23:JUL at 08:00:24 Address 123456, Version 01,
               Logic States 0200, During Initialisation
```

The information contains the current date and time followed by the installation address and version number, the number of mnemonics (logic state) used and phase of operation.

```
               Logic States 0234, During Normal Operation
```

B.3 Technician Interface

When the power is applied to the diagnostic module an identification message is output as shown below:

```
TECHNICIAN INTERFACE

(HE for Help)>
```

The Technician Interface responds the following commands. The commands are entered by typing the first two characters of the command. Letters following and including the * should not be entered.

- CL*EAR	Clear Diagnostic Module NVRam.
- CO*NFIG	Display installation configuration information
- DA*TE	Display and Set the Diagnostic Module Date and/ or time
- DI*SPLAY	Display Mnemonic states
- EV*ENT	Display Diagnostic Module events
- FA*ULT	Display Diagnostic Module faults

- HE*LP	Display Diagnostic Module Help.
- MO*DULE	Display WESTRACE modules
- PR*INT	Print WESTRACE mnemonic states
- VL*E	Display WESTRACE installation status information

Commands which are being processed by the Diagnostic Module are subject to the following control key codes:

<ctrlS>	suspend command
<ctrlQ>	resume command
<ctrlX>	abort command.

B.3.1 CLEAR

The Clear command allows Diagnostic Module non-volatile RAM data areas to be cleared. The data areas are event data and fault data.

The following are valid commands:

CL	clears all logged faults and events.
CL EV	clears all events logged in event buffer.
CL FA	clears all faults logged in faults buffer.

Input and responses are shown below, the responses appear both on the technician interface and the event recorder.

```
CL<CR>
CLEAR 23:MAY at 13:56:00 Event  NVRam Cleared
CLEAR 23:MAY at 13:56:00 Fault  NVRam Cleared

CL EV<CR>
CLEAR 24:MAY at 13:56:00 Event  NVRam Cleared

CL FA<CR>
CLEAR 25:MAY at 13:56:00 Fault  NVRam Cleared
```

B.3.2 CONFIGURATION

The Configuration command allows configuration information to be displayed.

The following are valid commands:

CO	displays the installation configuration data

Input and responses are shown below, the responses appear on the technician interface only.

```
CO<CR>
CONFIG CED Information
      Installation Name:            SOUTH MELBOURNE
      Installation Address:         001122
      Configuration Data Version: 1
```

The configuration information is displayed for the name, address and version.

B.3.3 DATE_TIME

The Date_Time command allows the day, month, year and/or the hour, minute, seconds to be displayed or changed.

The following are valid commands:

`DA`	displays the current date
`DA DD:MMM:YY`	sets date
`DA HH:MM:SS`	sets time
`DA DD:MMM:YY,HH:MM:SS`	sets both date and time

Input and responses are shown below, the responses appear on the technician interface only.

```
DA<CR>
DATE_TIME  02:JUN at 10:05:00

DA 21:MAY:95<CR>
DATE_TIME  21:MAY at 10:05:00 Year 95

DA 08:00:01<CR>
DATE_TIME  21:MAY at 08:00:01 Year 95

DA 22:JUL:91,10:00:04<CR>
DATE_TIME  22:JUL at 10:00:04 Year 91
```

B.3.4 DISPLAY

The Display command allows the current logic elements to be displayed.

The following are valid commands:

`DI`		displays all elements
`DI`	`<nnn>`	particular elements
`DI`	`<mnemonic>`	state of a particular mnemonic
`DI`	`<nnn>,<nnn>`	range of elements

Input and responses are shown below, the responses appear on the technician interface only.

```
DI<CR>
STATES   Range 0001 to 1000
         001 1001011010100101001010110101001010100000101001010 0
         051 1001011010100101001010110101001010100000101001010 0
         ... ..................................................
         ... ..................................................
         951 1001011010100101001010110101001010100000101001010 0

DI OPCR<CR>
STATES   OPCR    1
```

```
D1 101<CR>
STATES   Range 0101 to 0101
         101 10010101010100000101010101011111001011111111000011

DI 710,765<CR>
STATES   Range 0710 to 0765
         701 11000000000010100101011010100101010000010100101001
         751 01111111111111111111110000000000000010010111011000
```

Each line contains a logic state number followed by 50 logic states. The logic state refers to the first logic state on a line.

B.3.5 EVENT

The Event command allows the history of events to be displayed.

The following are valid commands:

EV	info on events
EV <nnn>	particular event number
EV <nnn>, <nnn>	range of events
EV DD:MMM	all events on a particular date

Input and responses are shown below, the responses appear on the technician interface only.

```
EV<CR>
EVENT    No Entries

EV<CR>
EVENT    Details from 023 to 022 (circular buffer full)

EV 17<CR>
EVENT    017 13:MAR at 04:05:10 - 0003 Changes
            OPJ-1,   OP9J-0,  OP9JR-1

EV 17,19<CR>
EVENT    017 13:MAR at 04:05:10 - 0003 Changes
            OPJ-1,   OPJR-0,  OP9JR-1
EVENT    018 13:MAR at 05:10:58 - 0003 Changes
            DGE-1,    HGE-0,  HGEJR-1
EVENT    019 14:MAR at 09:09:09 - 0008 Changes
            OP2J-1,  OP2JR-0,  OP9JR-1,    OP1-0,
            OP2-1,    OP3-0,    OP4-1,    OP5-0

EV 21:DEC<CR>
EVENT    078 21:DEC at 10:09:10 - 0001 Changes
            HGE-0
EVENT    080 21:DEC at 10:09:11 - 0001 Changes
            HGE-1
```

The first line specifies the event record number, date, time and number of changes. The subsequent lines display the logic states which changed with the new logic state displayed.

B.3.6 FAULT

The Fault command allows fault entries to be displayed.

The following are valid commands:

FA		info on faults
FA	<nnn>	particular fault number
FA	<nnn>,<nnn>	range of faults
FA	DD:MMM	all faults on a particular date

Input and responses are shown below, the responses appear on the technician interface only.

```
FA<CR>
FAULT    No Entries

FA<CR>
FAULT    Details from 005 to 004 (circular buffer full)

FA 5<CR>
FAULT    005 11:DEC at 11:35:17 NVC232    is 01H
            in Housing 1 Slot 34 with Software Version 01

FA 7,10<CR>
FAULT    007 13:JAN at 00:09:54 VPIM      is 2EH
            in Housing 1 Slot 34 with Software Version 01
FAULT    008 02:SEP at 23:13:13 VLOM50    is 01H
            in Housing 1 Slot 33 with Software Version 01
FAULT    009 13:NOVat15:20:14 VTC232      is 2DH
            in Housing 2 Slot 32 with Software Version 03
FAULT    010 29:FEB at 03:33:15 VLM/HVLM       is DCH
            in Housing 2 Slot 02 with Software Version 03

FA 23:MAY<CR>
FAULT    043 23:MAYat12:00:00 VLM/HVLM is DCH
            in Housing 1 Slot 03 with Software Version 02
```

The information contains the fault record number, date and time, module type and fault description, followed by the module information.

B.3.7 HELP

The Help command gives information on all commands their function and their parameters.

The following are valid commands:

HE		General help information
HE	<value>	Help information on particular command

Where <value> is an abbreviated command.

For example:

```
HE MO<CR>
```

B.3.8 MODULE

The Module command allows module entries to be displayed.

The following are valid commands:

MO	information on all modules

Input and responses are shown below, the responses appear on the technician interface only.

```
MO<CR>
MODULE   Modules in Range 00 to 03
         00   DM  -------------------  with Software Version 01
         01 VLM/HVLM      in Housing 1 at Slot 03 with Software
                                                        Version 02
         02 VPIM          in Housing 1 at Slot 04 with Software
                                                        Version 01
         03 NVC232        in Housing 1 at Slot 05 with Software
                                                        Version 02
```

The range of modules to be displayed is shown initially. Information relating to each module of the range then appears on separate lines.

B.3.9 PRINT

The Print command allows the logic states corresponding to mnemonics states to be printed.

The following are valid commands:

PR		all elements
PR	<nnnn>	particular element number
PR	<mnemonic>	state of a particular mnemonic
PR	<nnnn>,<nnnn>	range of elements

Input and responses are shown below, the responses appear on the technician interface only.

```
PR<CR>
STATES   Range 0001 to 1000
         001 10010110101001010010101101010010101000001010010100
         051 10010110101001010010101101010010101000001010010100
         951 10010110101001010010101101010010101000001010010100

PR 100<CR>
STATES   Range 0100 to 0100
         051 10010101010110100101010101010101010100101010101010

PR NOPCR<CR>
STATES   NOPCR   1

PR 505,575<CR>
STATES   Range 0505 to 0575
         501 10001001011100101001010110101001010100001010010100
         551 10010110101010110100010101000000010100101001010101110
```

Each line contains a logic state number followed by 50 logic states. The logic state refers to the first logic state on a line.

B.3.10 VLE

The VLE command displays the diagnostic status information.

The following is the valid command:

`VL`	displays status information

Input and responses are shown below, the responses appear on the technician interface only.

```
VL<CR>
VLE_DATA    Address 123456, Version 01,
```

Appendix C—Diagnostic Module Logging Package

This appendix contains details of the Diagnostic Module Logging Package.

C.1 General Description

The WESTRACE Diagnostic Module Logging Package is a PC based front-end to the WESTRACE Diagnostic Module. It provides:

- Maintenance access to both serial ports of the DM simultaneously;
- Transfer of logged events from the Event Recorder Interface to the PC's hard disk;
- A Technician Interface to enable commands to be sent to the DM.

WESTRACE systems that include a DM128 may use MoviolaW as an alternative to the WESTRACE Diagnostic Module Logging Package. MoviolaW provides Microsoft Windows-based diagnostic and logging applications.

This section describes the WESTRACE Diagnostic Module Logging Package only, not MoviolaW. For information about MoviolaW see the First Line Maintenance Manual and the MoviolaW User Manual.

C.2 Hardware Requirements

The PC hardware requirements for running the WESTRACE Diagnostic Module Logging Package are these:

- An IBM-compatible personal computer (PC), with an 80386 (or later) central processor;
- DOS version 3.3 or later;
- At least 640kB of RAM;
- A hard disk for event logging;
- A 720kB or 1.44 MB floppy disk drive.

C.3 Installation

To install the package, copy the file `LOG.EXE` into the sub directory in which you want the package to reside. All disk event logging will be placed in this sub-directory.

C.4 Running the Package

To run the package, enter the following command at the DOS prompt in the directory where the package resides:

```
LOG -E<com_port>,<int_level>,<baud> -T<com_port>,<int_level>,<baud>
```

Where:

`-E`	is the event recorder interface port on the PC
`-T`	is the technician interface port on the PC

`com_port`	is the PC serial communications COM port that you want to use. Valid options are COM1, COM2, COM3 or COM4.
`int_level`	is the PC interrupt level for the COM port to be used. Valid options are 3, 4, 5 or 7.
`baud`	is the data transfer rate of the interface. Valid options are 1200 or 4800. Ensure that the data transfer rate selected is compatible with the setup on the DM installed.

For example:

To set up the PC to use COM1 for the event recorder interface and COM2 for the technician interface with both interfaces operating at 4800 bps, use the following command:

```
LOG -ECOM1,4,4800 -TCOM2,3,4800
```

Note: ***A small batch file may be written to execute this command.***

If only one serial port is available on the PC then both interface configurations should be set up identically.

C.5 Event Logging

The package provides a facility for logging all the data from the event recorder interface. This facility can be turned on and off by using the command ALT T, see section C.6.

The name of disk file receiving event logging data is displayed in the top left corner of the event recorder part of the screen. The log filename comprises the PC's current system date and the extension `.LOG`.

If the logging package is restarted a number of times in one day and logging is performed on these separate occasions, the new logging data is appended to the existing file. The package will create a new logging file if none exists. If lengthy periods of logging are conducted over several days, the package will create a new logging file at 00:00 hours on each day.

Note: ***The PC time may differ slightly from the DM time. If you are checking data which was logged at either end of the day you should also check the data recorded by previous or next day's log file as appropriate.***

C.6 Commands

The following commands are available for controlling the operation of the package. These commands are invoked by pressing the ALT key and then, while still depressing the ALT key, pressing the letter key on the keyboard such that both the ALT key and the letter key are depressed simultaneously.

C.6.1 ALT H

This command will display help information in the technician interface part of the screen. The help information comprises a list of the available commands.

C.6.2 ALT D

This command will invoke the DOS command interrupter and present a DOS prompt. To return to the package you must type `EXIT` at the DOS prompt.

For example:

```
C:\>exit
```

C.6.3 ALT T

This command will toggle the disk event recording on and off. The current status of the logging is displayed in the technician part of the screen.

C.6.4 ALT X

This command will exit you from the package and return you to the DOS prompt.

C.6.5 Diagnostic Module Commands

Commands to the Diagnostic Module via the Technician Interface are entered by typing them on the keyboard. The DM prompt '>' will appear on the Technician Interface part of the screen. You may need to press ENTER a few times to get the DM to display the prompt. All DM commands are available except those which use control characters. Refer to the Diagnostic Module Technician interface for further information regarding DM commands.

APPENDIX D—MOVIOLAW

This appendix contains an overview of using MoviolaW as a service tool for WESTRACE.

D.1 General Description

MoviolaW is an excellent tool for commissioning and maintaining WESTRACE based systems.

How MoviolaW is used will depend upon:

- The rail network and WESTRACE installation to which MoviolaW is connected;
- The type of problem or fault under consideration;
- Personal experience with the systems.

The purpose of MoviolaW is to:

- Monitor WESTRACE events and other railway signal logic in near real time;
- Collect the data from WESTRACE and then play it back at the user's convenience.

The purpose of this section is to provide tips and techniques on using MoviolaW for maximum effectiveness. The MoviolaW User Manual has specific instructions for operating MoviolaW. All of this information should be adapted to suit the task and personal knowledge of the system.

D.2 Installation and Hardware Requirements

MoviolaW can be connected to a local WESTRACE system or through a modem or local area network to a remote WESTRACE system. A local MoviolaW system is usually dedicated to the local WESTRACE whereas a remote MoviolaW can connect, at various times, to one or more WESTRACE systems. In all cases, the WESTRACE system must be fitted with a DM128, an NVC/DM, an NCDM or similar diagnostic module.

An NVC/DM is required if the WESTRACE system is to dial-up MoviolaW. An NCDM is required for a local area network connection.

MoviolaW is normally installed on a dedicated personal computer (PC).

D.3 Operational Overview

MoviolaW collects and displays events it receives from the diagnostic module(s) in a WESTRACE system. An event is generated every time something changes state in the monitored system. MoviolaW adds events to an event log in the order they are received from WESTRACE.

D.3.1 Real Time or Replay

Real time mode—called 'Indications' mode which is a nearly real time display of events as they happen. A green bar is displayed, bottom right hand side of the screen, while MoviolaW is receiving data from WESTRACE.

Replay mode—replays event stored in the log so that they can be observed off-line. A red bar is displayed, bottom right hand side of the screen. In this mode, MoviolaW is receiving data from WESTRACE in the background.

Events can be replayed:

- forward or backward;
- slower, faster or at the original recording rate.

D.3.2 Faults and Failures

Failures—are problems with equipment external to WESTRACE and will only be indicated if allowed by the local application configuration.

- MoviolaW detects failures by associating them with defined combinations of its inputs;

  Conversely, MoviolaW cannot detect failures that are not defined, therefore some failures may not be observed;
- Other mnemonics may provide limited information on failures.

Faults—are problems with the WESTRACE equipment that have been logged by the diagnostic module.

- Use the Faults or Failures windows to identify equipment problems;
- See Chapter 7 of this manual for information on interpreting fault codes;
- See Appendix A of this manual for the meaning of the fault codes generated by WESTRACE modules;

  Remember that each WESTRACE module will produce a fault code when the system shuts down. You must analyse the logged data to find the faulty module that triggered the shut-down. Use the Replay mode to replay events leading up to shut down time.

D.3.3 Track Diagram

The track diagram is a graphical representation of the section of railway connected to the WESTRACE system. Physical features such as track, points and signals are represented by graphical elements and the diagram in its entirety provides a convenient overview of the railway.

The diagram is often useful for picking when there has been an operational problem although often it doesn't provide full details of the problem.

Use the track diagram to observe the operation of any area of interest.

Use the replay facility to:

- Determine the time of a problem;
- Step through each cycle surrounding a problem;

Use other techniques described later to reduce the scope of the problem.

D.3.4 Events Window

This window displays the 100 (can be altered) most recent changes of state of the Interlocking's mnemonics (variables), in historical order. It can operate in either 'Indications' or 'Replay' mode.

The state of a mnemonic is represented thus:

0	represents	de-energised
1	"	energised.

Use the window to:

- Monitor change of state of inputs, outputs and internal states as they occur (indicator mode);
- Step through cycle by cycle to observe what has happened (replay mode);
- Isolate variables with a changed state by eliminating all that remain steady.

D.3.5 Variables Window

This window displays all of the Interlocking's mnemonics (variables) in alphanumeric order together with the variable's current state. It can operate in either 'Indications' or 'Replay' mode.

The state of a mnemonic is represented thus:

0	represents	de-energised
1	"	energised.

Use the window to:

- Check the current state of any variable;
- Determine if there is a short cut to finding the cause of a problem.

D.3.6 Faults Window

This window displays the last 50 faults that occurred in the interlocking. Any significant fault (that results in WESTRACE shutting down) is marked with a red arrow.

Use the window to see:

- The time and date of a fault;
- The affected driver;
- A description of the fault and the associated fault code.

D.3.7 Failures Window

This window displays faults in the interlocking as they occur. Faults are shown in chronological order and they disappear from the window as they are resolved.

Use the window to see:

- The time and date of a failure;
- A description of the failure.

D.3.8 Operations Window

This window displays a list of operations performed by a WESTRACE when the WESTRACE includes an NVC/DM or NCDM.

Use the window to see:

- The time and date of an operation;
- The associated driver;
- The operation code for the operation.

D.3.9 Commands Window

This window displays a list of commands sent from the Control Centre to the interlocking.

Use the window to see:

- The time and date of a command;
- The command itself.

D.3.10 Reports Window

This window can display five different reports chosen from a dialog box:

- **Variables Report**—provides details of selected variables during a selectable time interval. A choice from three types of Variables Report is available:
  - Show initial status and changes;
  - Count changes to one;
  - Count changes to zero;
- **Fault Report**—provides details of faults that occurred during a selectable time interval;
- **Failure Report**—provides details of failures during a selectable time interval. A choice from two types of Failure Report is available:
  - Faults that happened;
  - Faults repaired.
- **Commands Report**—provides details of commands sent from the Control Centre during a selectable time interval;
- **Operations Report**—provides details of operations executed in a WESTRACE that contains an NVC/DM or NCDM during a selectable time period;

Reports can be useful for determining how many times a variable changed state or whether a variable indicates a possible failure.

For example:

- Loss of point detection;
- Track circuit bobbing;
- Control lever operated.

D.3.11 Hardware Window

This window lists all of the hardware modules installed at the monitored site.

Use the window to:

- Determine the type of diagnostic module feeding information to MoviolaW;
- Compare the presence and position of WESTRACE hardware with what should be there according to the GCSS printout.

D.3.12 Housing Window

This window graphically display all of the hardware modules fitted to WESTRACE housings installed at the monitored site. This window can be used for the same purposes as the Hardware Window.

D.3.13 DM128 Driver Window

This window displays communications between WESTRACE and MoviolaW (local only).

The standard window has two parts:

- An upper window displaying WESTRACE events received from the diagnostic module;
- A lower window displaying all other communications between MoviolaW and WESTRACE.

Use the window to:

- Check communication activity between MoviolaW and WESTRACE;
- Open a dialog box and send commands to the diagnostic module.

  See Appendix B in this manual for information about diagnostic module commands.

Note: ***Do not close this window. It must remain in a minimised state to maintain MoviolaW-WESTRACE communications.***

D.4 Communication with NVC/DM or NCDM

D.4.1 Passwords

Communication with an NVC/DM or NCDM through a serial diagnostic port or NCDM through the network requires the use of passwords. Every NVC/DM or NCDM has default passwords in its Non-vital Configuration. It may also have been configured with other passwords that override the defaults.

To communicate with a particular NVC/DM or NCDM, MoviolaW must have the appropriate passwords in its `.ini` file. If these passwords are not correct, MoviolaW has a menu for changing them.

D.4.2 Dial Out Numbers for NVC/DM or NCDM

The NVC/DM or NCDM (NVLM) dials out if it logs a fault which has not yet been uploaded to MoviolaW. The NVLM will try to configured telephone numbers at defined intervals until connection is successful. As soon as the upload is complete, NVLM hangs up.

These telephone numbers and the NVLM serial diagnostic ports to be used are set through MoviolaW.

Note: ***The telephone numbers of a 'dial out only' port can be set though another diagnostic port.***

D.4.3 NVC/DM Driver Window

This window displays communications between WESTRACE and MoviolaW when the WESTRACE includes an NVC/DM or NCDM.

The window has two parts:

- An upper part displaying the state WESTRACE mnemonics;
- A lower part displaying all other communications between MoviolaW and WESTRACE.

Use the window to:

- Check communication activity between MoviolaW and WESTRACE;
- Open a dialog box and send commands to the NVC/DM or NCDM module.

Note: ***Do not close this window. It must remain in a minimised state to maintain MoviolaW-WESTRACE communications.***

D.5 Telemetry Statistics for NVC/DM or NCDM

Telemetry statistics are only available when the WESTRACE system is fitted with an NVC/DM or NCDM.

a) Open the Tests dialog box from the NVC/DM Driver window;

b) Select Get Port Statistics or Get Module Statistics;

c) Enter Port Number;

d) Wait for message 'Received Msgs'.

Other options available for step **b** are:

- Get Event Number;
- Get Fault Number
- Get Operation Number;
- Get Snapshot;
- Get Events;
- Get Faults
- Get Operations;
- Get CED;
- Set CED;
- Get CED Summary;
- Login;
- Logout;
- Clear Event Buffer;
- Clear Fault Buffer;
- Clear Operation Buffer;
- Set Time and Date;
- Get Time and Date;
- Set Password;
- Set Telephone Number;
- Get Telephone Number;
- Get Module Information;
- Vital Bar Command;
- Get Status;
- Get Installation Address;
- Get Logged Data;
- Reset Statistics.

Further options for NCDM (only) are these:

- Get VLM6 Statistics;
- Reset VLM6 Statistics;
- Get VLM6 Channel Statistics;
- Get Network Session Statistics.

APPENDIX E—GETLOG UTILITY

This appendix describes the use of the GETLOG utility in extracting logged data from an NVC/DM or NCDM.

E.1 Introduction

GETLOG is a simple DOS command line utility for extracting logged data from an NVC/DM or NCDM. This section describes how it is used.

E.2 Operation

GETLOG has three main modes of operation:

Status displays NVC/DM or NCDM status and VLM status, then exit.

Upload displays status, then upload some or all previously logged events, faults or operations, then continuously poll for and display new log data until a key is pressed.

Menu displays status, then display a menu allowing certain diagnostic commands to be sent.

GETLOG is invoked at the DOS command line. See section E.3 for details.

E.2.1 Status Display

The sample below shows typical information displayed when GETLOG is run. This information provides gives a quick overview of the current WESTRACE system status.

```
Next Fault:          8
Next Operation:      11
Next Event:          81
Installation Addr:   0xaadd84
Date/Time:           21/07/2000 17:36:35.5
CED Version:         1
CED Size:            2560
VLM CED Version:     1
VLM CED Size:        131072
VLE Phase:           APPDEL
Modules:
  Unknown            Addr:c1  SW Ver:0a
  Unknown            Addr:31  SW Ver:04
  Unknown            Addr:51  SW Ver:06
  NVCDM              Addr:79  SW Ver:04
```

In the example above:

- Eight faults have been logged (Fault #0 to Fault #7); the next fault to be logged will be Fault #8;

  Also 11 operations have been logged (Operation #0 to Operation #10), and 81 events have been logged (Event #0 to Event #80);
- The WESTRACE installation address is AADD84 (hex);

  Unlike the installation address value displayed in GCSS, the value reported by GETLOG includes the three parity bits, so it should match the value set by the 24 links on the vital backplane card;
- The current NVC/DM or NCDM time is as shown;
- The NVC/DM or NCDM CED data version is 1 and the size of the CED

is 2560 bytes (rounded up to the nearest 128 bytes);

- The HVLM128 CED data version is 1 and the size is 131072 bytes (ie. 128 kbyte);
- The VLE Phase is currently Application Delay;
- There are four WESTRACE modules installed, with the specified backplane addresses and software versions;

  GETLOG does not currently extract the module types from the VLM CED, hence all module types (apart from the NVC/DM or NCDM) are shown as 'Unknown'.

Note: ***CED is an old term. I now only applies to the original VLM module now known as VLM1.***

Elsewhere in this manual, a VLM CED is known as 'Vital PROM Data' and an NVC/DM or NCDM CED is known as 'Non-vital Configuration'.

E.2.2 Upload Display

The sample below shows fault, operation and event data which has been extracted from the NVC/DM or NCDM. Faults are always listed first, then operations, then events.

Note: ***GETLOG does not distinguish between NVC/DM and NCDM in what it displays.***

The following information is listed for each fault:

- Fault number;
- Date/time;
- Module backplane address (in this example all faults are NVC/DM or NCDM internal faults);
- Fault code, and for NVC/DM or NCDM faults, a translation of the fault code into English.

The following information is listed for each operation:

- Operation number;
- Date/time;
- Operation code and a translation of the operation code into English;
- Any additional logged data.

The following information is listed for each event:

- Event number;
- Date/time;
- Mnemonic name (with 'NV_' prefix for non-vital and 'V_' for vital) and value (1 for energised, 0 for de-energised);

  Mnemonic names are only displayed if the **–i** option was used to specify a CED image file.

```
FLT 0: 21/07/2000 17:24:15.0 NVCDM-79 0800 NVRAM LOST
FLT 1: 21/07/2000 17:24:36.8 NVCDM-79 3019 PORT 3 MODULE 1 TIMEOUT
FLT 2: 21/07/2000 17:24:46.8 NVCDM-79 2001 PORT 2 TIMEOUT
FLT 3: 21/07/2000 17:35:23.8 NVCDM-79 3019 PORT 3 MODULE 1 TIMEOUT
FLT 4: 21/07/2000 17:35:33.8 NVCDM-79 2001 PORT 2 TIMEOUT
FLT 5: 21/07/2000 17:35:40.0 NVCDM-79 2000 PORT 2 OK

OPR 0: 21/07/2000 17:24:15.0  0900 WESTRACE RESTART ''
OPR 1: 21/07/2000 17:24:29.0  0600 VLM STATUS CHANGED '0'
OPR 2: 21/07/2000 17:25:22.1  0600 VLM STATUS CHANGED '1'
OPR 3: 21/07/2000 17:27:26.3  0600 VLM STATUS CHANGED '2'
OPR 4: 21/07/2000 17:35:02.0  0900 WESTRACE RESTART ''
OPR 5: 21/07/2000 17:35:15.9  0600 VLM STATUS CHANGED '0'
OPR 6: 21/07/2000 17:35:40.2  0101 LOGIN FAILED 'P2 password'
OPR 7: 21/07/2000 17:35:50.0  0100 LOGIN 'P2 read'
OPR 8: 21/07/2000 17:36:09.1  0600 VLM STATUS CHANGED '1'
OPR 9: 21/07/2000 17:36:21.2  0104 FORCED LOGOUT 'P2'

EVT 0: 21/07/2000 17:24:15.0  Restart Record
EVT 1: 21/07/2000 17:24:15.0  NV_NVCDMOK = 1
EVT 2: 21/07/2000 17:24:15.0  NV_PORTSOK = 1
EVT 3: 21/07/2000 17:24:15.0  NV_NAPPDEL = 1
EVT 4: 21/07/2000 17:24:15.0  NV_NSTRDEL = 1
EVT 5: 21/07/2000 17:24:16.7  NV_nvrom1 = 1
EVT 6: 21/07/2000 17:24:16.7  NV_nvrom2 = 1
EVT 7: 21/07/2000 17:24:16.7  NV_nvrom3 = 1
EVT 8: 21/07/2000 17:24:16.7  NV_nvrom4 = 1
EVT 9: 21/07/2000 17:24:16.7  NV_nvrom5 = 1
EVT 10: 21/07/2000 17:24:16.7  NV_nvrom6 = 1
EVT 11: 21/07/2000 17:24:16.7  NV_nvrom7 = 1
EVT 12: 21/07/2000 17:24:16.7  NV_nvrom8 = 1
EVT 13: 21/07/2000 17:24:19.8  NV_NSTRDEL1 = 1
EVT 14: 21/07/2000 17:24:29.1  V_NVCSEL = 1
EVT 15: 21/07/2000 17:24:29.1  V_OPCRFLT = 1
EVT 16: 21/07/2000 17:24:29.1  V_PIOFLT = 1
EVT 17: 21/07/2000 17:24:29.1  V_CONFLT = 1
EVT 18: 21/07/2000 17:24:30.5  NV_vpim2 = 1
EVT 19: 21/07/2000 17:24:30.5  NV_vpim5 = 1
EVT 20: 21/07/2000 17:24:30.5  NV_vpim7 = 1
EVT 21: 21/07/2000 17:24:30.5  NV_nvrom2 = 0
EVT 22: 21/07/2000 17:24:30.5  NV_nvrom5 = 0
EVT 23: 21/07/2000 17:24:30.5  NV_nvrom7 = 0
EVT 24: 21/07/2000 17:24:46.8  NV_PORTSOK = 0
EVT 25: 21/07/2000 17:25:22.2  V_STRDEL = 1
EVT 26: 21/07/2000 17:25:22.2  V_INTDET = 1
EVT 27: 21/07/2000 17:25:22.2  V_INTDET1 = 1
EVT 28: 21/07/2000 17:25:22.2  V_nvrom1 = 1
EVT 29: 21/07/2000 17:25:22.2  V_nvrom3 = 1
EVT 30: 21/07/2000 17:25:22.2  V_nvrom4 = 1
EVT 31: 21/07/2000 17:25:22.2  V_nvrom6 = 1
EVT 32: 21/07/2000 17:25:22.2  V_nvrom8 = 1
EVT 33: 21/07/2000 17:25:22.2  V_vpim2 = 1
EVT 34: 21/07/2000 17:25:22.2  V_vpim5 = 1
EVT 35: 21/07/2000 17:25:22.2  V_vpim7 = 1
EVT 36: 21/07/2000 17:25:25.2  V_STRDEL1 = 1
EVT 37: 21/07/2000 17:25:25.7  V_APPDEL = 1
EVT 38: 21/07/2000 17:26:17.2  NV_NAPPDEL1 = 1
EVT 39: 21/07/2000 17:27:25.8  V_APPDEL1 = 1
EVT 40: 21/07/2000 17:35:02.0  Restart Record
EVT 41: 21/07/2000 17:35:02.0  NV_NVCDMOK = 1
EVT 42: 21/07/2000 17:35:02.0  NV_PORTSOK = 1
EVT 43: 21/07/2000 17:35:02.0  NV_NAPPDEL = 1
EVT 44: 21/07/2000 17:35:02.0  NV_NSTRDEL = 1
EVT 45: 21/07/2000 17:35:03.7  NV_nvrom1 = 1
```

In the example above:

- At 17:24:15.0 the WESTRACE is restarted;

  The first fault indicates the information stored in NVRAM has been lost, possibly due to the lithium battery being flat. A special event, a "Restart Record" is logged at this time to indicate that the state of all mnemonics is assumed to be de-energised. Also logged at this time are events for all non-vital mnemonics with an initial state of energised;
- At 17:24:16.7 the first cycle of non-vital logic executes, and some mnemonics change state as a consequence;
- At 17:24:19.8 the non-vital 3-second NSTRDEL1 timer expires;
- At 17:24:29.1 the first message is received from the VLM containing the initial vital states;

  An event is logged for any energised state, and an operation is logged to indicate that the VLM status is now 0 (ie. initialisation);
- At 17:24:36.8 module 1 on port 3 times out so a fault is logged;
- At 17:24:46.8 port 2 (a diagnostic port) times out;

  As a consequence the non-vital PORTSOK mnemonic is cleared;
- At 17:25:22.1 the VLM status changes to 1 (application delay);
- At 17:27:25.8 the vital APPDEL1 timer expires, and the VLM status changes to 2 (normal working);
- At 17:35:02.0 the WESTRACE restarts.

E.2.3 Menu Functions

The following is the GETLOG menu:

```
1. Set Time
2. Get Earliest Snapshot
3. Get Latest Snapshot
4. Get Non Vital Port and Module Statistics
5. Clear Log Buffers
6. Clear Non Vital Port and Module Statistics
7. Get VLM6 Vital Port Statistics
8. Get VLM6 Vital and Non Vital Channel Statistics
9. Get Non Vital Network Session Statistics
10. Clear VLM6 Vital Port and Channel Statistics
99. Quit
```

These menu commands produce the following results:

- '1' sets the NVC/DM or NCDM time equal to the current PC time.
- '2' or '3' displays a snapshot of vital and non-vital states.

  This snapshot corresponds to the state of the NVC/DM or NCDM's event buffer, either at the start or the end.

  A typical snapshot display is as follows:

```
Non-vital Snapshot Prior to Event 104
   NV_NVCDMOK=1    NV_PORTSOK=0 NV_TIMESYNCOUT=0 NV_TIMESYNCIN=0
   NV_NAPPDEL=1   NV_NAPPDEL1=1     NV_NSTRDEL=1   NV_NSTRDEL1=1
 NV_RESSTATEA=0  NV_RESSTATEB=0   NV_RESSTATEC=0  NV_RESSTATED=0
 NV_RESTIMERA=0 NV_RESTIMERA1=0   NV_RESTIMERB=0 NV_RESTIMERB1=0
       NV_abc=0        NV_def=0         NV_ghi=0      NV_vpim1=0
     NV_vpim2=1      NV_vpim3=1       NV_vpim4=1      NV_vpim5=1
     NV_vpim6=1      NV_vpim7=1       NV_vpim8=0     NV_nvrom1=1
```

```
    NV_nvrom2=0     NV_nvrom3=0     NV_nvrom4=0     NV_nvrom5=0
    NV_nvrom6=0     NV_nvrom7=0     NV_nvrom8=1


Vital Snapshot Prior to Event 104
      V_NOPCR=0      V_NVCSEL=1        V_0LOIC=0        V_1LOIC=0
      V_2LOIC=0       V_3LOIC=0        V_4LOIC=0        V_5LOIC=0
      V_6LOIC=0       V_7LOIC=0        V_0LOOC=0        V_1LOOC=0
      V_2LOOC=0       V_3LOOC=0        V_4LOOC=0        V_5LOOC=0
      V_6LOOC=0       V_7LOOC=0       V_EXOPCR=0      V_OPCRFLT=1
     V_PIOFLT=1      V_RCOVER=0       V_MYMODE=0      V_SBYSTAT=0
    V_SSWITCH=0      V_CONFLT=1      V_RESLATA=0      V_RESLATB=0
     V_APPDEL=1     V_APPDEL1=1       V_STRDEL=1      V_STRDEL1=1
     V_INTDET=1     V_INTDET1=1       V_RESTMA=0      V_RESTMA1=0
     V_RESTMB=0     V_RESTMB1=0       V_RESTMC=0      V_RESTMC1=0
     V_RESTMD=0     V_RESTMD1=0         V_t1in=0        V_t1out=0
       V_t2in=0       V_t2out=0       V_nvrom1=1       V_nvrom2=0
     V_nvrom3=0      V_nvrom4=0       V_nvrom5=0       V_nvrom6=0
     V_nvrom7=0      V_nvrom8=1        V_vpim1=0        V_vpim2=1
      V_vpim3=1       V_vpim4=1        V_vpim5=1        V_vpim6=1
      V_vpim7=1       V_vpim8=0
```

- ‘4’ displays telemetry statistics for each port and S2 Address.

  These show number of:

  - messages transmitted;
  - messages received;
  - line errors (eg bad CRC);
  - overload errors and number of data errors (badly formatted or inconsistent messages).

  A typical statistics display follows below; (note that in this example port 3, a WSA/S2 master port, has sent 3844 messages to S2 Address 1 but has received no replies—this would cause an S2 Address timeout fault).

```
Port 1  -
Port 2  TX:108    RX:109    LineErr:0      OvldErr:0      DataErr:0
Port 3  TX:7682   RX:3840   LineErr:0      OvldErr:0      DataErr:0
 Module 1   TX:3844   RX:0      Retry:0      DataErr:0
 Module 7   TX:3843   RX:3842   Retry:0      DataErr:0
Port 4  TX:3845   RX:7692   LineErr:0      OvldErr:0      DataErr:0
 Module 7   TX:3848   RX:3848   Retry:0      DataErr:0
Port 5  -
Port 6  -
Port 7  -
```

- ‘5’ clears all logged fault, operation and event data on the NVC/DM or NCDM.
- ‘6’ resets non-vital port and S2 Address statistics to zero;
- ‘7’, ‘8’, ‘9’ and ‘10’ can only be used when WESTRACE has a VLM6 and an NCDM.

Note: ***Module is equivalent to ‘S2 address’ in the example above.***

E.3 Command Line Parameters

GETLOG is controlled by entering a combination of the command line parameters described in the sections that follow. All command line parameters are case sensitive and can be entered in any order separated but at least 1 blank character.

Type `getlog` with no parameters to display a brief list of the available parameters.

Type `getlog` with the parameters listed in sections E.3.1 to E.3.5 to achieve the desired objectives.

E.3.1 Mode Selection Options

–s selects Status mode

–m selects Menu mode

–f, –o, –e selects Upload mode.
The parameters cause the following to be displayed:

- **-f** faults,
- **-o** operations
- **-e** events.

Each may be followed by a record number to start at; if no number is specified, then only new data is uploaded (i.e. data logged after getlog started running).

Example:

```
getlog -f37 -o
```

will display faults in the NVC/DM or NCDM buffer starting at fault #37, and any faults or operations which occur while getlog is running. No events will be displayed.

Another example:

```
getlog -f0 -o -e
```

will display all faults in the NVC/DM or NCDM buffer, and any faults, operations or events which occur while getlog is running. This setting is equivalent to what the NVC/DM or NCDM MoviolaW driver does.

E.3.2 Functional Options

–v read vital CED and status information as well as non-vital

–nN assume NVC/DM or NCDM is at backplane address N (hex)—if specified then NVC/DM or NCDM fault codes are displayed in English

–**i**S read non-vital mnemonics from file S_nvcdm.img (if –v specified, also read vital mnemonics from S.img)

–**d** debug mode, display all messages sent and received

E.3.3 File Output Options

OutFile copy displayed output to specified file (log data, snapshot or statistics)

–**c** output log data to file in CSV format (for spreadsheet import, allows faults, events and operations to be merged and sorted by date/time, for example)

E.3.4 Link Configuration

–**b**N selects baud rate (choose from 1200, 2400, 4800, 9600, 19200, 57600; default is 57600)

–**c**N selects PC COM port (default is 2)

–**t**N sets polling rate in msec (default is 1000)

E.3.5 Protocol Configuration

–**a**N selects NVC/DM or NCDM diagnostic port address (default is 1)

–**pr**S login for read using password S (default is WESTRACE)

–**pw**S login for write using password S (default is WESTRACE)

The default is to login for read if neither –**pr** nor –**pw** is specified.

APPENDIX F—NGETLOG UTILITY

This appendix describes the use of the NGETLOG utility in extracting logged data from an NCDM via a network.

F.1 Introduction

NGETLOG is a simple DOS command line utility for extracting logged data from an NCDM. This section describes how it is used.

F.2 Operation

NGETLOG has three main modes of operation:

Status display NCDM status and VLM6 status, then exit.

Upload display status, then upload some or all previously logged events, faults or operations, then continuously poll for and display new log data until a key is pressed.

Menu display status, then display a menu allowing certain diagnostic commands to be sent.

NGETLOG is invoked at the DOS command line. See section F.3 for details.

F.2.1 Status Display

The sample below shows typical information displayed when NGETLOG is run. This information provides gives a quick overview of the current WESTRACE system status.

```
Next Fault:          8
Next Operation:      11
Next Event:          81
Installation Addr:   0xaadd84
Date/Time:           21/07/2000 17:36:35.5
CED Version:         1
CED Size:            2560
VLM CED Version:     1
VLM CED Size:        131072
VLE Phase:           APPDEL
Modules:
  Unknown            Addr:c1  SW Ver:0a
  Unknown            Addr:31  SW Ver:04
  Unknown            Addr:51  SW Ver:06
  NCDM               Addr:79  SW Ver:04
```

In the example above:

- Eight faults have been logged (Fault #0 to Fault #7); the next fault to be logged will be Fault #8;

  Also 11 operations have been logged (Operation #0 to Operation #10), and 81 events have been logged (Event #0 to Event #80);
- The WESTRACE installation address is AADD84 (hex);

  Unlike the installation address value displayed in GCSS, the value reported by NGETLOG includes the three parity bits, so it should match the value set by the 24 links on the vital backplane card;
- The current NCDM time is as shown;
- The NCDM Non-vital Configuration data version is 1 and the size of

the Non-vital Configuration is 2560 bytes (rounded up to the nearest 128 bytes);

- The VLM6 Non-vital Configuration data version is 1 and the size is 131072 bytes (ie. 128 kbyte);
- The VLE Phase is currently Application Delay;
- There are four WESTRACE modules installed, with the specified backplane addresses and software versions;

  NGETLOG does not currently extract the module types from the VLM6 Non-vital Configuration, hence all module types (apart from the NCDM) are shown as 'Unknown'.

Note: ***CED is an old term. It now only applies to the original VLM module now known as VLM1.***

Elsewhere in this manual, a VLM CED is known as 'Vital PROM Data' and an NVC/DM or NCDM CED is known as 'Non-vital Configuration'.

F.2.2 Upload Display

The sample below shows fault, operation and event data which has been extracted from the NCDM

The following information is listed for each fault:

- Fault number;
- Date/time;
- Module backplane address (in this example all faults are NCDM internal faults);
- Fault code, and for NCDM faults, a translation of the fault code into English.

The following information is listed for each operation:

- Operation number;
- Date/time;
- Operation code and a translation of the operation code into English;
- Any additional logged data.

The following information is listed for each event:

- Event number;
- Date/time;
- Mnemonic name (with 'NV_' prefix for non-vital and 'V_' for vital) and value (1 for energised, 0 for de-energised);

  Mnemonic names are only displayed if the **–i** option was used to specify a Non-vital Configuration image file.

```
OPR  0: 5/02/2003 14:13:30.7  0202 OPERATION BUFFER CLEARED 'P11'
OPR  1: 5/02/2003 14:13:30.7  0201 FAULT BUFFER CLEARED 'P11'
OPR  2: 5/02/2003 14:13:31.2  0200 EVENT BUFFER CLEARED 'P11'
OPR  3: 5/02/2003 14:13:48.0  0900 WESTRACE RESTART ''
OPR  4: 5/02/2003 14:13:51.5  0100 LOGIN 'P11S1 write'
```

```
OPR  5: 5/02/2003 14:14:06.9  0600 VLM STATUS CHANGED '0'
OPR  6: 5/02/2003 14:14:59.6  0600 VLM STATUS CHANGED '1'

EVT  0: 5/02/2003 14:13:48.0  Restart Record
EVT  1: 5/02/2003 14:13:48.0  NV_NCDMOK = 1
EVT  2: 5/02/2003 14:13:48.0  NV_SERPORT1OK = 1
EVT  3: 5/02/2003 14:13:48.0  NV_SERPORT2OK = 1
EVT  4: 5/02/2003 14:13:48.0  NV_VLMPORTOK = 1
EVT  5: 5/02/2003 14:13:48.0  NV_NETPORTOK = 1
EVT  6: 5/02/2003 14:13:48.0  NV_NAPPDEL = 1
EVT  7: 5/02/2003 14:13:48.0  NV_NSTRDEL = 1
EVT  8: 5/02/2003 14:13:48.0  NV_NCONFLT = 1
EVT  9: 5/02/2003 14:13:50.1  NV_SERPORT1OK = 0
EVT 10: 5/02/2003 14:13:50.1  NV_SERPORT2OK = 0
EVT 11: 5/02/2003 14:13:53.2  NV_NSTRDEL1 = 1
EVT 12: 5/02/2003 14:14:06.9  V_NVCSEL = 1
EVT 13: 5/02/2003 14:14:06.9  V_OPCRFLT = 1
EVT 14: 5/02/2003 14:14:06.9  V_PIOFLT = 1
EVT 15: 5/02/2003 14:14:06.9  V_CONFLT = 1
EVT 16: 5/02/2003 14:14:59.7  V_STRDEL = 1
EVT 17: 5/02/2003 14:14:59.7  V_INTDET = 1
EVT 18: 5/02/2003 14:14:59.7  V_INTDET1 = 1
EVT 19: 5/02/2003 14:15:02.2  V_STRDEL1 = 1
EVT 20: 5/02/2003 14:15:02.7  V_APPDEL = 1

FLT  0: 5/02/2003 14:15:40.2  Unknown-b9  b019
FLT  1: 5/02/2003 14:15:44.2  Unknown-b9  b018

OPR  7: 5/02/2003 14:15:40.2  0104 FORCED LOGOUT 'P11S1'
OPR  8: 5/02/2003 14:15:44.2  0100 LOGIN 'P11S1 write'

EVT 21: 5/02/2003 14:15:50.2  NV_NAPPDEL1 = 1

OPR  9: 5/02/2003 14:17:03.3  0600 VLM STATUS CHANGED '2'

EVT 22: 5/02/2003 14:17:02.8  V_APPDEL1 = 1
EVT 23: 5/02/2003 14:18:40.9  V_trig1 = 1
EVT 24: 5/02/2003 14:18:40.9  V_trig2 = 1
EVT 25: 5/02/2003 14:18:40.9  V_trig3 = 1
EVT 26: 5/02/2003 14:18:40.9  V_vpim1 = 1
EVT 27: 5/02/2003 14:18:41.9  NV_ntrig1 = 1
EVT 28: 5/02/2003 14:18:41.9  NV_ntrig2 = 1
EVT 29: 5/02/2003 14:18:41.9  NV_ntrig3 = 1
EVT 30: 5/02/2003 14:18:41.9  NV_vpim1 = 1
EVT 31: 5/02/2003 14:19:02.9  V_trig1 = 0
EVT 32: 5/02/2003 14:19:02.9  V_trig2 = 0
EVT 33: 5/02/2003 14:19:02.9  V_trig3 = 0
EVT 34: 5/02/2003 14:19:02.9  V_vpim1 = 0
EVT 35: 5/02/2003 14:19:03.9  NV_ntrig1 = 0
EVT 36: 5/02/2003 14:19:03.9  NV_ntrig2 = 0
EVT 37: 5/02/2003 14:19:03.9  NV_ntrig3 = 0
EVT 38: 5/02/2003 14:19:03.9  NV_vpim1 = 0
EVT 39: 5/02/2003 14:19:07.9  V_trig1 = 1
EVT 40: 5/02/2003 14:19:07.9  V_trig2 = 1
EVT 41: 5/02/2003 14:19:07.9  V_trig3 = 1
EVT 42: 5/02/2003 14:19:07.9  V_vpim1 = 1
EVT 43: 5/02/2003 14:19:08.9  NV_ntrig1 = 1
EVT 44: 5/02/2003 14:19:08.9  NV_ntrig2 = 1
EVT 45: 5/02/2003 14:19:08.9  NV_ntrig3 = 1
EVT 46: 5/02/2003 14:19:08.9  NV_vpim1 = 1
```

In the example above:

- At 14:13:48.0 the WESTRACE is restarted;
  A special event, a 'Restart Record' is logged at this time to indicate

that the state of all mnemonics is assumed to be de-energised. Also logged at this time are events for all non-vital mnemonics with an initial state of energised;

- At 14:13:53.2 the non-vital NSTRDEL1 timer expires;
- At 14:14:06.9 the first message is received from the VLM6 containing the initial vital states.

  An event is logged for any energised state, and an operation is logged to indicate that the VLM6 status is now 0 (ie. initialisation);
- At 14:14:59.6 the VLM6 status changes to 1 (application delay);
- At 14:15:40:2 a fault occurred forcing WESTRACE to terminate the network connection;
- At 14:15:44:2 the network connection was re-established;
- At 14:15:50.2 the non-vital APPDEL1 timer expires;
- At 14:17:02.8 the vital APPDEL1 timer expires, and the VLM6 phase changes to 2 (normal working) at 14:17:03.3;
- At 14:18:40.9 the first cycle of vital logic executes, and some mnemonics change state as a consequence;
- At 14:18:41.9 the first cycle of non-vital logic executes, and some mnemonics change state as a consequence.

F.2.3 Menu Functions

The following is the NGSETLOG menu:

```
1. Set Time
2. Get Earliest Snapshot
3. Get Latest Snapshot
4. Get Non Vital Port and Module Statistics
5. Clear Log Buffers
6. Clear Non Vital Port and Module Statistics
7. Get VLM6 Vital Port Statistics
8. Get VLM6 Vital and Non Vital Channel Statistics
9. Get Non Vital Network Session Statistics
10. Clear VLM6 Vital Port and Channel Statistics
99. Quit
```

These menu commands produce the following results:

- ‘1’ sets the NCDM time equal to the current PC time.
- ‘2’ or ‘3’ displays a snapshot of vital and non-vital states.

  This snapshot corresponds to the state of the NCDM’s event buffer, either at the start or the end.

A typical snapshot display is as follows:

```
Non-vital Snapshot Prior to Event 104
    NV_NCDMOK=1    NV_PORTSOK=0 NV_TIMESYNCOUT=0 NV_TIMESYNCIN=0
   NV_NAPPDEL=1   NV_NAPPDEL1=1     NV_NSTRDEL=1   NV_NSTRDEL1=1
 NV_RESSTATEA=0  NV_RESSTATEB=0   NV_RESSTATEC=0  NV_RESSTATED=0
 NV_RESTIMERA=0 NV_RESTIMERA1=0   NV_RESTIMERB=0 NV_RESTIMERB1=0
       NV_abc=0        NV_def=0         NV_ghi=0      NV_vpim1=0
     NV_vpim2=1      NV_vpim3=1       NV_vpim4=1      NV_vpim5=1
     NV_vpim6=1      NV_vpim7=1       NV_vpim8=0     NV_nvrom1=1
    NV_nvrom2=0     NV_nvrom3=0      NV_nvrom4=0     NV_nvrom5=0
    NV_nvrom6=0     NV_nvrom7=0      NV_nvrom8=1
```

```
Vital Snapshot Prior to Event 104
      V_NOPCR=0      V_NVCSEL=1        V_0LOIC=0       V_1LOIC=0
      V_2LOIC=0       V_3LOIC=0        V_4LOIC=0       V_5LOIC=0
      V_6LOIC=0       V_7LOIC=0        V_0LOOC=0       V_1LOOC=0
      V_2LOOC=0       V_3LOOC=0        V_4LOOC=0       V_5LOOC=0
      V_6LOOC=0       V_7LOOC=0       V_EXOPCR=0     V_OPCRFLT=1
     V_PIOFLT=1      V_RCOVER=0       V_MYMODE=0     V_SBYSTAT=0
    V_SSWITCH=0      V_CONFLT=1      V_RESLATA=0     V_RESLATB=0
     V_APPDEL=1     V_APPDEL1=1       V_STRDEL=1     V_STRDEL1=1
     V_INTDET=1     V_INTDET1=1       V_RESTMA=0     V_RESTMA1=0
     V_RESTMB=0     V_RESTMB1=0       V_RESTMC=0     V_RESTMC1=0
     V_RESTMD=0     V_RESTMD1=0         V_t1in=0       V_t1out=0
       V_t2in=0       V_t2out=0       V_nvrom1=1      V_nvrom2=0
     V_nvrom3=0      V_nvrom4=0       V_nvrom5=0      V_nvrom6=0
     V_nvrom7=0      V_nvrom8=1        V_vpim1=0       V_vpim2=1
      V_vpim3=1       V_vpim4=1        V_vpim5=1       V_vpim6=1
      V_vpim7=1       V_vpim8=0
```

- ‘4’ displays telemetry statistics for each port and S2 Address.

  These show number of:

  - messages transmitted;
  - messages received;
  - line errors (eg bad CRC);
  - overload errors and number of data errors (badly formatted or inconsistent messages).

  A typical statistics display follows below; (note that in this example port 3, a WSA/S2 master port, has sent 3844 messages to S2 Address 1 but has received no replies—this would cause an S2 Address timeout fault).

```
Port 2  TX:108    RX:109    LineErr:0      OvldErr:0      DataErr:0
Port 3  TX:7682   RX:3840   LineErr:0      OvldErr:0      DataErr:0
   Module 1   TX:3844   RX:0      Retry:0      DataErr:0
   Module 7   TX:3843   RX:3842   Retry:0      DataErr:0
Port 4   -
Port 5   -
Port 6   -
Port 7   -
Port 8  TX:942    RX:1413   LineErr:0      OvldErr:0      DataErr:0
Port 9   -
Port 10  TX:473    RX:473    LineErr:0      OvldErr:0      DataErr:0
Port 11  TX:144    RX:144    LineErr:0      OvldErr:0      DataErr:0
```

Ports 10 and 11 correspond to ports A and B on the NCDM. See section A.11.2.2.

- ‘5’ clears all logged fault, operation and event data on the NCDM;
- ‘6’ resets all non-vital port and S2 Address statistics to zero;
- ‘7’ gets vital port statistics for the VLM6;

```
Port 10  TX:650873 RX:650873 LineErr:0      OvldErr:0      DataErr:0
```

Note: ***Module is equivalent to ‘S2 address’ in the example above.***

- ‘8’ gets vital and non-vital channel statistics for the VLM6;

```
NON Vital channel 1   TX:506    Total RX:506    Total Valid RX:506
Bad CRC or BCC RX:0      Bad Header RX:0      Bad Channel RX:0
```

```
Inconsistent RX:0      Bad Sequence RX:0      Out of Date RX:0
Invalid Length RX:0
```

- ‘9’ gets non-vital network statistics;

```
Getting net stats for protocol -> 1, module -> 1
Rx’d OK : Protocol 1  Session 1   TX:196    RX:196    DataErrors:0
paramter error
Getting net stats for protocol -> 2, module -> 0
paramter error
Getting net stats for protocol -> 3, module -> 0
paramter error
Getting net stats for protocol -> 4, module -> 0
Rx’d OK : Protocol 4  Session 0   TX:0      RX:0      DataErrors:0
paramter error
Getting net stats for protocol -> 7, module -> 0
paramter error
```

F.3 Command Line Parameters

NGETLOG is controlled by entering a combination of the command line parameters described in the sections that follow. All command line parameters are case sensitive and can be entered in any order separated but at least 1 blank character.

Type `NGETLOG` with no parameters to display a brief list of the available parameters.

Type `NGETLOG` with the parameters listed in sections F.3.1 to F.3.5 to achieve the desired objectives.

F.3.1 Mode Selection Options

–s selects Status mode

–m selects Menu mode

–f, –o, –e selects Upload mode.
The parameters cause the following to be displayed:

- **-f** faults,
- **-o** operations
- **-e** events.

Each may be followed by a record number to start at; if no number is specified, then only new data is uploaded (ie. data logged after NGETLOG started running).

Example:

```
NGETLOG -f37 -o
```

will display faults in the NCDM buffer starting at fault #37, and any faults or operations which occur while NGETLOG is running. No events will be displayed.

Another example:

```
NGETLOG -f0 -o -e
```

will display all faults in the NCDM buffer, and any faults, operations or events which occur while NGETLOG is running. This setting is equivalent to what the NCDM MoviolaW driver does.

F.3.2 Functional Options

–**v**	read Vital PROM Data and status information as well as Non-vital Configuration
–**n**N	assume NCDM is at backplane address N (hex)—if specified then NCDM fault codes are displayed in English
–**i**S	read non-vital mnemonics from file S_nvcdm.img (if –v specified, also read vital mnemonics from S.img)
–**d**	debug mode, display all messages sent and received

F.3.3 File Output Options

OutFile	copy displayed output to specified file (log data, snapshot or statistics)
–**c**	output log data to file in CSV format (for spreadsheet import, allows faults, events and operations to be merged and sorted by date/time, for example)

F.3.4 Link Configuration

–**c**S	use network IP S
-**t**N	set polling rate in ms/sec (default is 1000)

F.3.5 Protocol Configuration

–**z**N	use session N
–**a**N	selects NCDM diagnostic port address (default is 1)
–**pr**S	login for read using password S (default is WESTRACE)
–**pw**S	login for write using password S (default is WESTRACE)

The default is to login for read if neither –**pr** nor –**pw** is specified.

APPENDIX G—S2 TELEMETRY MODULES

WESTRACE may use S2 modems and associated motherboards to communicate vital and non-vital data to other sites or the remote control centre.

There are several different modules and line connections that can be used.

Refer to the WESTRONIC S2 First-line Maintenance Manual for configuration and maintenance details.

Appendix H—Communication Module Descriptions

This appendix describes the fundamental features of the communication equipment which is part of this system and used to transmit the WEST-ECT radio messages.

H.1 Communications Rack

H.1.1 Description

The Communications Rack is the external interface for the WESTECT Encoder that generates the broadcast radio messages that define route authorities. These radio messages are received by equipped trains in the vicinity. There is no return communication channel from the train.

The Communications Rack is a 3 U high 19 inch rack, and comprises two functions:

- Radio Control Module, RCM. (Made up from two PCBs fixed together);
- 2 Radios. (Both are either MOTOROLA SYNTRX or TAIT).

The basic arrangement is shown in the following diagram.

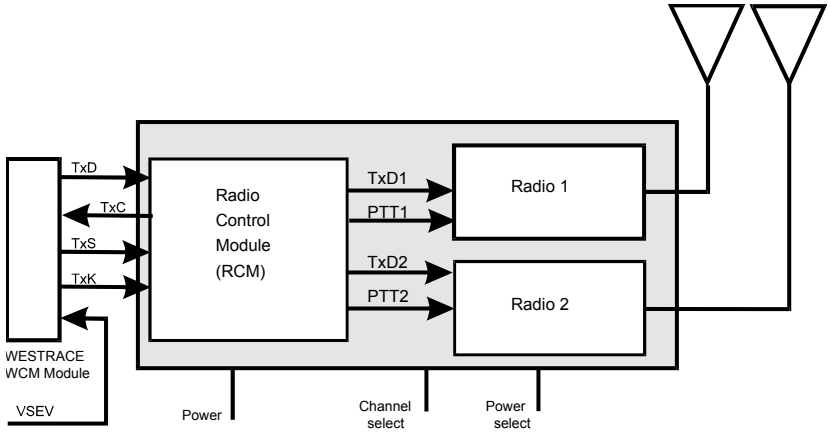

Figure H.1: Block Diagram of Communication Housing

H.1.2 Function

The WESTECT Communication Module (WCM) in the WESTECT Encoder provides serial data, handshake and radio control at RS232 levels. This is received by the RCM.

The RCM receives the data and modulates it using FFSK modulation, suitable for transmission over a voice grade channel. It modifies the control line levels suitable for the radios. The modulated data is provided to both radios. The RCM controls the Press to Talk (PTT) function on each radio such that the radios are keyed up alternatively. The RCM ensures that the PTT is activated in time for the radio to key up completely before data is sent and is only de-activated after the transmission has been completed.

Each radio in the Communications Rack is alternately selected for data transmission at a rate of once per second.

H.1.3 Operation

The purpose of the system is to generate and broadcast a data message that describes the routes set by the interlocking.

H.1.3.1 WESTECT Communication Module (WCM)

The WESTECT WCM module, described elsewhere, in conjunction with the complete Encoder, is responsible for generation of the data message.

The WCM will only output data if:

- the 24V VSEV supply is present on the rear connector of the WCM PFM, or;
- the Transmit Clock (TxC) is correctly supplied from the RCM, The TxC is a 1200 Hz (approx 833µs period) square wave. Normal level is approximately 1V.

The WCM generates the following RS232-C level signals:

- Transmit Select (TxS). This signal is used to select the radio to be keyed up for transmission. One radio is selected during the high output and the other during the low output (there is a small dead band introduced by the RCM to ensure that both radios are not keyed simultaneously);

  The period is approximately 1.6 s. This may vary dependant on the size of the encoder but should never be greater than 2 s;
- Transmit Key (TxK). This signal is used to key up the radios;
- Transmit Data (TxD). This signal contains the data to be transmitted.

  The data is encoded using bi-sync protocol and therefore the normal character formatting separation using start and stop bits cannot be seen.

H.1.3.2 Radio and Control Module (RCM)

The RCM module is responsible for modulation of the data signal and providing the control signals to the radios.

The RCM is powered from the encoder 24 V supply.

The RCM interfaces to the WCM using the signals described in the pervious section.

The RCM generates:

- The Transmit Clock (TxC) required by the WCM;
- Press to Talk (PTT) output to each radio;

  The PTT is generated from ANDing the TxS and TxK inputs for radio A and the !TxS and TxK inputs for radio B. The combination of these signals ensures a dead band between transmissions to ensure that one radio shuts down before the other radio is keyed up;

  The PTT signal at nominal 12V is supplied from the radio and is selected by an opto coupler on the RCM. The PTT signal will be typically 2V to 4V when a radio is keyed up;
- Modulated Data. This is fed out on a balanced 600 Ohm line. The data

is modulated using FFSK modulation in the voice frequency band.

H.1.3.3 Radios

There are two radios used in each installation. These transmit alternately as controlled by the TxS signal generated by the WCM. A receive function is not implemented although some radios used incorporate a receiver.

The radios are powered from a 12V supply.

The inputs are described in the previous sections.

Radios may be selected for one of 8 different frequencies. In practice, only 6 different frequencies are used.

The frequency for both radios is selected by commoning terminals on the internal terminal rail of the Communications Rack as detailed in tables H1 and H2.

Note: ***Table H1 refers to Westinghouse drawing No. 26103057. Table H2 refers to Westinghouse drawing No. 26103055.***

Make connections using wire links fitted with 0.25 inch quick connect lugs between the terminals shown to set the required transmit radio channels.

		Radio 1			Radio 2		
Channel	**Frequency (MHz)**	**S3 Conn 11**	**S2 Conn 10**	**S1 Conn 9**	**S3 Conn 15**	**S2 Conn 14**	**S1 Conn 13**
1	418.250	RGND[1]	RGND		RGND		
2	418.550	RGND		RGND	RGND		RGND
3	418.850	RGND			RGND		
4	418.875		RGND	RGND		RGND	RGND
5	418.900		RGND			RGND	
6	418.925			RGND			RGND

Table H1: Radio Channel Selection (TAIT Radios)

1. RGND is on terminals 3, 4, 5 & 6.

		Radio 1			Radio 2		
Channel	**Frequency (MHz)**	**S3 Conn 3**	**S2 Conn 2**	**S1 Conn 1**	**S3 Conn 20**	**S2 Conn 19**	**S1 Conn 18**
1	418.250	R1P[1]	R1P	1CSCOM[2]	R2P[3]	R2P	2CSCOM[4]
2	418.550	R1P	1CSCOM	R1P	R2P	2CSCOM	R2P

Table H2: Radio Channel Selection (Motorola Radios)

		Radio 1			Radio 2		
Channel	Frequency (MHz)	S3 Conn 3	S2 Conn 2	S1 Conn 1	S3 Conn 20	S2 Conn 19	S1 Conn 18
3	418.850	R1P	1CSCOM	1CSCOM	R2P	2CSCOM	2CSCOM
4	418.875	1CSCOM	R1P	R1P	2CSCOM	R2P	R2P
5	418.900	1CSCOM	R1P	1CSCOM	2CSCOM	R2P	2CSCOM
6	418.925	1CSCOM	1CSCOM	R1P	2CSCOM	2CSCOM	R2P

Table H2: Radio Channel Selection (Motorola Radios) ***(Continued)***

1. R1P is terminals 4,5 & g
2. 1CSCOM is terminals 9,10,11,12,13
3. R2P is terminals 21, 22, 23
4. 2CSCOM is terminals 26,27, 28,29,30p

Motorola radios may be configured by link selection as detailed in table H3 for either 1W or 5W transmit power.

The Tait radios are factory preset for operation at either 5W or 25W transmit power. Rated power output is 25W, however the range of adjustment is 5–25 W.

Motorola	Radio 1	Radio 2
1W	1PSEL (terminal 8 on Radio Terminal Rail) connected to 1CSCOMM (0V)	2PSEL (terminal 25 on Radio Terminal Rail) connected to 2CSCOMM (0V)
5W	1PSEL (terminal 8 on Radio Terminal Rail) left open circuit	2PSEL (terminal 25 on Radio Terminal Rail) left open circuit

Table H3: Setting of Motorola Radio Power Output

Some applications may use an rf attenuator in the radio output.

H.1.4 Configuration

H.1.4.1 Radio Channel

Select the radio channel designated for the specific encoder. Refer to tables H1 and H2.

H.1.4.2 Transmit Power

Select the power output designated tor the specific area Refer to table H3.

H.1.5 Indications

H.1.5.1 Start Up

- Remove 12 V power from the radios.
- Apply power to the Encoder.

- Wait 60 seconds after all Encoder green watchdog LEDs are flashing.
- Apply power to the radios.

The lower PCB of the RCM unit has a single green LED which dims slightly when either radio transmits. The LED should dim with a frequency of once every second. Dimming should begin to occur within 45 seconds of power up.

H.1.5.2 Operation

During correct operation, the RCM's LED will dim in time with each radio transition.

TAIT radios have a GREEN LED mounted on the chassis, that indicate power is on. A RED LED, also mounted on the chassis, illuminates when the radio is transmitting. It is therefore possible to observe that both radios are keyed up alternately.

MOTOROLA radios have no visible indication the radios are either powered or transmitting.

Both radios types should be warm to the touch when correctly operational.

H.1.5.3 Fault Codes

None.

H.2 Remote RCM

H.2.1 Description

The Remote RCM is the external interface for the WESTECT Encoder that generates the broadcast radio messages that define route authorities. These radio messages are received by equipped trains in the vicinity. There is no return communication channel from the train.

The remote RCM is installed near the WESTECT encoder. It is used when a communications rack with radios only is installed some distance from the encoder. Communication between the RCM and the Communication rack is via cable.

The basic arrangement is shown in the following diagram.

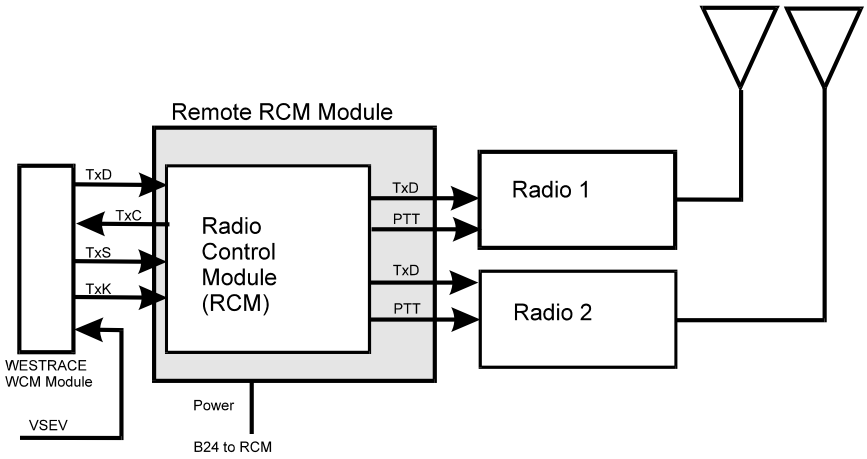

Figure H.2: Block Diagram of Communication Housing

H.2.2 Function

The WESTECT Communication Module (WCM) in the WESTECT Encoder provides serial data, handshake and radio control at RS232 levels. This is received by the RCM.

The RCM receives the data and modulates it using FFSK modulation, suitable for transmission over a voice grade channel. It modifies the control line levels suitable for the radios. The modulated data is provided to both radios. The RCM controls the Press to Talk (PTT) function on each radio such that the radios are keyed up alternatively. The RCM ensures that the PTT is activated in time for the radio to key up completely before data is sent and is only de-activated after the transmission has been completed

Each radio in the Communications Rack is alternately selected for data transmission at a rate of once per second.

H.2.3 Operation

The purpose of the system is to generate and broadcast a data message that describes the routes set by the interlocking.

A description of the whole communication system is included, even those this goes beyond the RCM. This is to assist in understanding the operation.

H.2.3.1 WESTECT WCM Module

The WESTECT WCM module, described elsewhere, in conjunction with the complete Encoder, is responsible for generation of the data message.

The WCM will only output data if:

- The 24V VSEV supply is present on the rear connector of the WCM PFM;
- The Transmit Clock (TxC) is correctly supplied from the RCM, The TxC is a 1200 Hz (approx 833ms period) square wave. Normal level is approximately 1V.

The WCM generates the following RS232-C level signals:

- Transmit Select (TxS). This signal is used to select the radio to be keyed up for transmission. One radio is selected during the high output and the other during the low output (there is a small dead band introduced by the RCM to ensure that both radios are not keyed simultaneously);

  The period is approximately 1.6 s. This may vary dependant on the size of the encoder but should never be greater than 2 s;
- Transmit Key (TxK). This signal is used to key up the radios;
- Transmit Data (TxD). This signal contains the data to be transmitted. The data is encoded using bisync protocol and therefore the normal character formatting separation using start and stop bits cannot be seen.

H.2.3.2 WESTECT Remote Radio and Communication Module

The RCM module is responsible for modulation of the data signal and providing the control signals to the radios.

The RCM is powered from the encoder 24 V supply.

The RCM interfaces to the WCM using the signals described in the previous section.

The RCM generates:

- The Transmit Clock (TxC) required by the WCM.
- Press to Talk (PTT) output to each radio.

  The PTT is generated from ANDing the TxS and TxK inputs for radio A and the !TxS and TxK inputs for radio B. The combination of these signals ensures a dead band between transmissions to ensure that one radio shuts down before the other radio is keyed up.

The PTT signal at nominal 12V is supplied from the radio and is selected by an opto coupler on the RCM. The PTT signal will be typically 2V to 4V when a radio is keyed up.

- Modulated Data. This is fed out on a balanced 600 Ohm line. The data is modulated using FFSK modulation in the voice frequency band.

H.2.4 Indications

H.2.4.1 Start Up

The lower PCB of the RCM unit has a single green LED which dims slightly when either radio transmits. The LED should dim with a frequency of once every second. Dimming should begin to occur within 45 seconds of power up.

H.2.4.2 Operation

During correct operation, the RCM's LED will dim in time with each radio transition.

TAIT radios have a GREEN LED mounted on the chassis, that indicate power is on. A RED LED, also mounted on the chassis, illuminates when the radio is transmitting. It is therefore possible to observe that both radios are keyed up alternately.

MOTOROLA radios have no visible indication the radios are either powered or transmitting.

Both radios types should be warm to the touch when correctly operational.

H.2.4.3 Fault Codes

None.

H.3

H.4 Remote Communications Rack

H.4.1 Description

The Remote Communications Rack is used to broadcast WESTECT encoder radio messages. It is connected to the Remote RCM. These radio messages are received by equipped trains in the vicinity. There is no return communication channel from the train.

The Remote Communications Rack is a 3 U high 19 inch rack, and comprises:

- 2 Radios. (Both are either MOTOROLA SYNTRX or TAIT).

This equipment is always used in conjunction with a Remote RCM module whenever the radios must be installed a significant distance from the WESTECT Encoder. The communications link between the Remote RCM and the Remote Communications Rack is suitable for use with communications cable. The high attenuation of the RF signal in the antenna coax cable means that the distance between the radios and the antennae should be kept to a minimum.

The basic arrangement is shown in the following diagram.

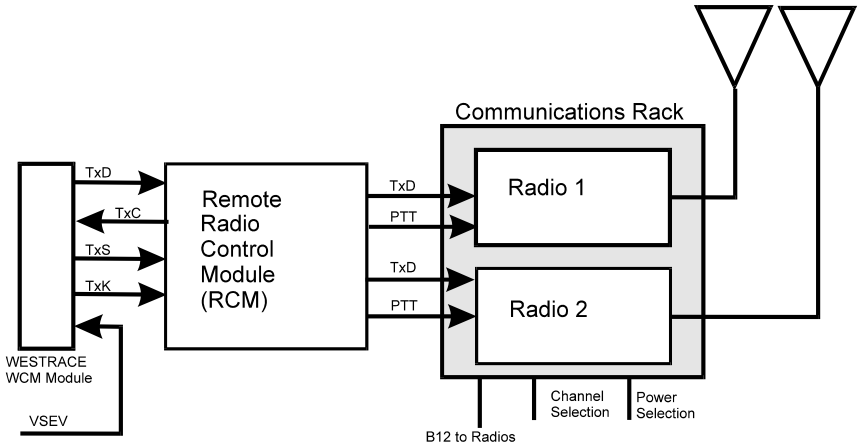

Figure H.3: Block Diagram of Communication Housing

H.4.2 Function

The WESTECT Communication Module (WCM) in the WESTECT Encoder provides serial data, handshake and radio control at RS232 levels. This is received by the RCM.

The RCM receives the data and modulates it using FFSK modulation, suitable for transmission over a voice grade channel. It modifies the control line levels suitable for the radios. The modulated data is provided to both radios. The RCM controls the Press to Talk (PTT) function on each radio such that the radios are keyed up alternatively. The RCM ensures that the PTT is activated in time for the radio to key up

completely before data is sent and is only de-activated after the transmission has been completed

Each radio in the Remote Communications Rack is alternately selected for data transmission at a rate of once per second.

H.4.3 Operation

The purpose of the system is to generate and broadcast a data message that describes the routes set by the interlocking. The complete interface will be described in the following paragraphs, even though this equipment only comprises the communication rack.

H.4.3.1 WESTECT WCM Module

The WESTECT WCM module, described elsewhere, in conduction with the complete Encoder, is responsible for generation of the data message.

The WCM will only output data if:

- The 24 V VSEV supply is present on the rear connector of the WCM PFM;
- The Transmit Clock (TxC) is correctly supplied from the RCM. The TxC is a 1200 Hz (approx 833ms period) square wave. Normal level is approximately 1 V.

The WCM generates the following RS232-C level signals:

- Transmit Select (TxS). This signal is used to select the radio to be keyed up for transmission. One radio is selected during the high output and the other during the low output (there is a small dead band introduced by the RCM to ensure that both radios are not keyed simultaneously);

  The period is approximately 1.6 s. This may vary dependant on the size of the encoder but should never be greater than 2 s;
- Transmit Key (TxK). This signal is used to key up the radios;
- Transmit Data (TxD). This signal contains the data to be transmitted. The data is encoded using bisync protocol and therefore the normal character formatting separation using start and stop bits cannot be seen.

H.4.3.2 WESTECT Radio and Control Module (RCM)

The RCM module is responsible for modulation of the data signal and providing the control signals to the radios.

The RCM is powered from the encoder 24 V supply.

The RCM interfaces to the WCM using the signals described in the previous section.

The RCM generates:

- The Transmit Clock (TxC) required by the WCM;

- Press to Talk (PTT) output to each radio;

  The PTT is generated from ANDing the TxS and TxK inputs for radio A and the !TxS and TxK inputs for radio B. The combination of these signals ensures a dead band between transmissions to ensure that one radio shuts down before the other radio is keyed up.

  The PTT signal at nominal 12V is supplied from the radio and is selected by an opto coupler on the RCM. The PTT signal will be typically 2V to 4V when a radio is keyed up.
- Modulated Data. This is fed out on a balanced 600 Ohm line. The data is modulated using FFSK modulation in the voice frequency band.

H.4.3.3 Remote Communication Rack—Radios

There are two radios used in each installation. These transmit alternately as controlled by the TxS signal generated by the WCM. A receive function is not implemented although some radios used incorporate a receiver

The radios are powered from a 12V supply.

The inputs are described in the previous sections.

Radios may be selected for one 8 different frequencies. In practice, only 6 different frequencies are used.

The frequency is selected by commoning terminals on the internal terminal rail of the Remote Communications Rack as detailed in tables H4 and H5.

Note: ***Table H4 refers to Westinghouse drawing No. 26103056. Table H5 refers to Westinghouse document WETZCTRM.***

Make connections using wire links fitted with 0.25 inch quick connect lugs between the terminals shown to set the required transmit radio channels.

		Radio 1			Radio 2		
Channel	**Frequency MHz)**	**S3 Conn 11**	**S2 Conn 10**	**S1 Conn 9**	**S3 Conn 15**	**S2 Conn 14**	**S1 Conn 13**
1	418.250	RGND[1]	RGND		RGND		
2	418.550	RGND		RGND	RGND		RGND
3	418.850	RGND			RGND		
4	418.875		RGND	RGND		RGND	RGND
5	418.900		RGND			RGND	
6	418.925			RGND			RGND%%

Table H4: Tait Radio Channel Selection

1. RGND is on terminals 3, 4, 5 & 6.

		Radio 1			Radio 2		
Channel	Frequency (MHz)	S3 Conn 3	S2 Conn 2	S1 Conn 1	S3 Conn 20	S2 Conn 19	S1 Conn 18
1	418.250	R1P[1]	R1P	1CSCOM[2]	R2P[3]	R2P	2CSCOM[4]
2	418.550	R1P	1CSCOM	R1P	R2P	2CSCOM	R2P
3	418.850	R1P	1CSCOM	1CSCOM	R2P	2CSCOM	2CSCOM
4	418.875	1CSCOM	R1P	R1P	2CSCOM	R2P	R2P
5	418.900	1CSCOM	R1P	1CSCOM	2CSCOM	R2P	2CSCOM
6	418.925	1CSCOM	1CSCOM	R1P	2CSCOM	2CSCOM	R2P

Table H5: Motorola Radio Channel Selection

1. R1P is terminals 4,5 & g
2. 1CSCOM is terminals 9, 10,11,12,13
3. R2P is terminals 21, 22, 23
4. 2CSCOM is terminals 26,27, 28,29,30p

Motorola radios may be configured by link selection for either 1W or 5W transmit power.

The Tait radios are factory preset for operation at either 5W or 25W transmit power (depending on how they are ordered).

H.4.4 Configuration

H.4.4.1 Radio Channel

Select the radio channel designated for the specific encoder. Refer to tables H4 and H5.

H.4.5 Indications

H.4.5.1 Start Up

The lower PCB of the RCM unit has a single green LED which dims slightly when either radio transmits. The LED should dim with a frequency of once every second. Dimming should begin to occur within 45 seconds of power up.

H.4.5.2 Operation

During correct operation, the RCM's LED will dim in time with each radio transition.

TAIT radios have a GREEN LED mounted on the chassis, that indicate power is on. A RED LED, also mounted on the chassis, illuminates when the radio is transmitting. It is therefore possible to observe that both radios are keyed up alternately.

MOTOROLA radios have no visible indication the radios are either powered or transmitting.

Both radios types should be warm to the touch when correctly operational.

H.4.5.3 Fault Codes

None.

H.5

APPENDIX I—REPAIR REQUEST FORM

This appendix provides a WESTRACE Repair Request form (2 pages) that you can print or photocopy.

Use this form:

- to record fault codes as seen on each module at the same instant;
- to record which module failed;
- as part of your internal fault records.

Send your faulty module for repair together with this completed form to:

Westinghouse Rail Systems Australia
179–185 Normanby Road, South Melbourne, Victoria 3205, Australia.
Tel: +61 3 9233 8794 Fax: +61 3 9233 8777

The WRSA repair centre will test the module and compare your fault codes with the test fault codes. Repair technicians may determine that the fault was caused by your system rather than the faulty module alone.

WESTRACE Repair Request

Part 1: Return Details

WRSA Reference

Contact Details

Name .....

Organisation .....

Address .....

.....

.....

Phone .....

Fax .....

Email .....

Return Details

Name .....

Organisation .....

Address .....

.....

.....

Phone .....

Fax .....

Email .....

Commercial

Are you claiming warranty? Yes ☐ No ☐

Your Order Number .....

Faulty Equipment Details

Installation Name .....

Installation Location .....

Date Equipment Installed .....

.....

Date of Equipment Fault .....

Date Faulty Equipment Returned .....

Faulty Equipment Type or Name .....

Faulty Equipment Serial No. .....

Replacement Equipment Serial No. .....

Fault Details

Please record all WESTRACE module fault indications on Part 2: Fault Report.

Further Details .....

.....

.....

.....

.....

.....

.....

Additional information attached ☐

WRSA Use Only

WRSA Date In .....

WRSA Repair No. .....

Repaired by .....

Returned .....

Return this form with the equipment for repair to
Westinghouse Rail Systems Australia
179–185 Normanby Road, South Melbourne, Victoria 3205, Australia
Tel: +61 3 9233 8794 Fax: +61 3 9233 8777

invensys
WESTINGHOUSE
rail systems australia

WESTRACE Repair Request

Part 2: Fault Report

WRSA Reference

Location .....

Interlocking ID ..... Fault Date ..... Fault Time .....

Organisation ..... Technician Name .....

Show all WESTRACE module fault indications (LEDs and alphanumerics) as seen at time of failure, and circle any modules replaced:

Housing 1

PSU	15	14	13	12	11	10	9	8	7	6	5	4	3	2	1
○	○	○	○	○	○	○	○	○	○	○	○	○	○	○	○
○	○	○	○	○	○	○	○	○	○	○	○	○	○	○	○
○	○	○	○	○	○	○	○	○	○	○	○	○	○	☐	○
○	○	○	○	○	○	○	○	○	○	○	○	○	○	☐	○
○	○	○	○	○	○	○	○	○	○	○	○	○	○	☐	○
	○	○	○	○	○	○	○	○	○	○	○	○	○	☐	○
	○	○	○	○	○	○	○	○	○	○	○	○	○		○
	○	○	○	○	○	○	○	○	○	○	○	○	○		○
Hex Code*	___	___	___	___	___	___	___	___	___	___	___	___	___	___	___

Housing 2

PSU	15	14	13	12	11	10	9	8	7	6	5	4	3	2	1
○	○	○	○	○	○	○	○	○	○	○	○	○	○	○	○
○	○	○	○	○	○	○	○	○	○	○	○	○	○	○	○
○	○	○	○	○	○	○	○	○	○	○	○	○	○	○	○
○	○	○	○	○	○	○	○	○	○	○	○	○	○	○	○
○	○	○	○	○	○	○	○	○	○	○	○	○	○	○	○
	○	○	○	○	○	○	○	○	○	○	○	○	○	○	○
	○	○	○	○	○	○	○	○	○	○	○	○	○	○	○
	○	○	○	○	○	○	○	○	○	○	○	○	○	○	○
Hex Code*	___	___	___	___	___	___	___	___	___	___	___	___	___	___	___

Housing 3

PSU	15	14	13	12	11	10	9	8	7	6	5	4	3	2	1
○	○	○	○	○	○	○	○	○	○	○	○	○	○	○	○
○	○	○	○	○	○	○	○	○	○	○	○	○	○	○	○
○	○	○	○	○	○	○	○	○	○	○	○	○	○	○	○
○	○	○	○	○	○	○	○	○	○	○	○	○	○	○	○
○	○	○	○	○	○	○	○	○	○	○	○	○	○	○	○
	○	○	○	○	○	○	○	○	○	○	○	○	○	○	○
	○	○	○	○	○	○	○	○	○	○	○	○	○	○	○
	○	○	○	○	○	○	○	○	○	○	○	○	○	○	○
Hex Code*	___	___	___	___	___	___	___	___	___	___	___	___	___	___	___

Housing 4

PSU	15	14	13	12	11	10	9	8	7	6	5	4	3	2	1
○	○	○	○	○	○	○	○	○	○	○	○	○	○	○	○
○	○	○	○	○	○	○	○	○	○	○	○	○	○	○	○
○	○	○	○	○	○	○	○	○	○	○	○	○	○	○	○
○	○	○	○	○	○	○	○	○	○	○	○	○	○	○	○
○	○	○	○	○	○	○	○	○	○	○	○	○	○	○	○
	○	○	○	○	○	○	○	○	○	○	○	○	○	○	○
	○	○	○	○	○	○	○	○	○	○	○	○	○	○	○
	○	○	○	○	○	○	○	○	○	○	○	○	○	○	○
Hex Code*	___	___	___	___	___	___	___	___	___	___	___	___	___	___	___

* Fault codes are listed in Appendix A of the *WESTRACE First-Line Maintenance Manual* and the *WESTRACE Application Manual*.

Was OPCR energised at the time of failure? Yes ☐ No ☐

Did the system re-start when reset? Yes ☐ No ☐ — Please attach a printout of the the relevant section of the log (eg use GETLOG or NGETLOG).

If not, when did it fail? When reset ☐ Before OPCR energised ☐ After OPCR energised ☐

Additional information attached ☐

GLOSSARY

2nd Negation Part of the *WESTRACE Backplane*. Provides a mechanism for vital WESTRACE modules to negate the system in the event of a fault being detected. See also *Negation*.

Application Logic The logic that defines how the inputs and outputs for a particular installation are related.

Approach Locking The locking which is applied after the signal has cleared to prevent the signal attempting to normalise a route in front of a train.

Aspect The current state shown by a signal, eg Stop, Caution, Proceed, Reduce Speed etc.

ATP Automatic Train Protection

AWS Automatic Warning System

Backplane Interconnects all *WESTRACE* modules, incorporates the Inter Module Bus, Fault Bus, Health Monitoring, 2nd Negation and various other interfaces.

BCC Block Checksum Character. A method for validating the integrity of digital data.

Boolean Logic A method to define and evaluate the logical relationship between digital inputs and outputs. An equation consists of terms which are combined using AND, OR and NOT operators.

bps Bits per second

Buried Earth A connection made to earth by means of driving, or burying one, or more earth rods or conductors.

CBI Computer Based Interlocking—a generic term applied to interlockings using microprocessors.

CCSS Configuration Check Sub-System—a *WESTRACE* software package that executes on an IBM compatible *PC*. It is used by Signal Engineers to verify that the *CED* fitted to an interlocking is the correct version and has not changed from the source data. Used for *VLM*-based systems.

CEC Configuration Element Card—the CEC is part of the *VLM*. The *PROMs* containing the *CED* are fitted to the CEC on VLM1-based systems.

CED Configuration Element Data—configuration data, application logic, module definitions and mnemonic names. The vital CED is stored in *PROMs* which are installed on the VLM1 or HVLM modules. 'Vital PROM Data' is the equivalent term when discussing later vital logic modules.

'Non-vital Configuration' is the term used when discussing non-vital data that is downloaded to the *NVC/DM* or *NCDM*.

CIM Communications Interface Module—part of a *NVC/DM*, provides the serial interfaces.

CIMFIM Communications Interface Module Filter Interface Module—part of a *CIM*, contains level translation and filtering electronics.

CIMPM Communications Interface Module Protection Module—part of a *CIM*, contains transient protection electronics.

CNVC Configurable Non-Vital Communication Module

Coil An internal logic state which forms the output of a logic rung.

Compilation The process of creating the *CED* from the source file information.

Contact An internal logic state which is used as an input to a logic rung.

Control System The interface between the signaller and the railway signalling system. It may take the form of the rail authority's central control centre, or a local hard wired panel, or a control computer.

Control Tables A method of representing the interlocking functions in a form which is commonly used by Railway Industry.

CRC Cyclic Redundancy Check—a method for validating the integrity of digital data.

CS Configuration System—a set of *WESTRACE* software packages that executes on an IBM compatible *PC* and an associated manual. The CS comprises the *CSS* and *CCSS*. Used for *VLM*-based systems.

CSS Configuration Sub-System—a *WESTRACE* software package that executes on an IBM compatible *PC*. Used by Signal Engineers to design and simulate Application Data for WESTRACE Vital Signalling Systems. Used for *VLM*-based systems. Has been superseded by *GCSS*.

CTSS *WESTECT ATP* Transponder Configuration Sub-System

Cycle [WESTRACE] *WESTRACE* is designed to operate cyclically. Each cycle comprises the major phases of accepting input data, evaluating the logic once, delivering output the data and performing health checks.

Cycle Time The time taken to execute one complete *WESTRACE* cycle. This will vary, unless fixed for hot standby purposes, according to the number of *I/O* modules connected and the logic evaluated.

Diagnostic Module See *DM*.

Diagnostic System See *MoviolaW*.

DM Diagnostic Module— a *WESTRACE* module that monitors and records all changes of state and fault information in the WESTRACE system. The DM has external interface ports for interrogation the system and for transmitting data. A collective term which includes the original DM and the DM128. To be replaced by the *NVC/DM* or *NCDM*.

DTC Direct Traffic Control—a computer-based train control system used to electronically manage and validate train movements in non-signalled territory.

DWL Data Word Length—specific to the *WSA/S2* protocol and indicates the number of data bits in a message.

EPROM Blowing Form A printed record of *EPROM* programming.

EPROM Programming The process of storing data in *EPROMs*.

EPROM Erasable Programmable Read-Only Memory—a type of *PROM*. Used to store the *CED* and module software on the *HVLM128*.

Equipment Room Any building, fixed, or transportable, other than a control centre, housing *WESTRACE* equipment.

Event A transition in the state of an *ILS*. All events are logged by *WESTRACE*.

Event Log *MoviolaW* creates event logs of the *WESTRACE* operation and stores these logs for a defined period. Events recorded in the event log can be replayed.

External Diagnostic System See *MoviolaW*.

EVTC Enhanced Vital Telemetry Continuous Module—a *WESTRACE* module used for vital communication (66 bit) between two WESTRACE systems. For new installations, EVTC modules are recommended in place of *VTC* modules.

Fail-Safe The attribute of a process or equipment that ensures that each and every failure or combination of failures results in the system attaining safe condition.

Modern safety engineering prefers the term 'safety critical' and to define safety integrity levels.

Fatal Fault A software or hardware fault which makes the continued operation of a module impossible. A fatal fault in a vital module will result in negation of the system before the safe operation of the railway is compromised. See also *Non-fatal Fault*.

Fault Bus Part of the *WESTRACE Backplane*. Provides a mechanism for WESTRACE modules to report fault codes to the *DM* or *NVC/DM*.

Fault Code An numerical code which a *WESTRACE* module displays on its front panel fault display and which is logged by the *DM* or *NVC/DM*. This code indicates a self-diagnosed fault in the module, or, in the case of the NVC/DM, an externally connected module. Phase 1 WESTRACE modules use 8 bit fault codes, while the NVC/DM use 16 bit codes.

Flash Memory Non-volatile computer memory which can be written to as well as read from during operation.

GCS Graphical Configuration System—a set of Windows-based *WESTRACE* applications and associated manuals. The GCS comprises the *GCSS* and the *ICS*. Used for all *WESTRACE* using *HVLM128* or later vital logic module based systems.

GCSS Graphical Configuration Sub-System—a Windows-based *WESTRACE* application used by Signal Engineers to enter data to define the functionality

of the WESTRACE system. Used for all *WESTRACE* using *HVLM128* or later vital logic module based systems.

GSIM Graphic Simulator —a Windows-based *WESTRACE* application that provides graphic on-screen simulation of Local Control Panels and the status of tracks and trackside equipment of the railway under simulation.

HDLC High-level Data Link Control protocol—a commonly used computer protocol for serial communication. The *WSA/S2* and protocol is based on HDLC.

Health Monitoring Part of the *WESTRACE Backplane*. Provides a mechanism for vital WESTRACE modules to check the health of each other.

Hot Standby The arrangement where two *WESTRACE* installations, a main and a standby, run in parallel. The standby system is able to automatically take over in the event of a fault.

Housing The physical unit used to hold the *WESTRACE* modules in an installation. Up to four housings may be interconnected within the one installation.

HVBC Hot Standby Vital Backplane Card—a small, half height, printed circuit board installed directly behind the lower connectors of the *HVLM128*.

HVLC Hot Standby Vital Logic card—is the central processing module for an *HVLM128*.

HVLM128 Hot Standby Vital Logic Module—a *WESTRACE* that controls the operation of each WESTRACE system. It performs all logic processing and supervises communication between each WESTRACE module and itself. Two systems using these modules may be operated as main and standby with automatic changeover on most failure situations.

HVLM128a Hot Standby Vital Logic Module—same as HVLM128 but with modified capacities.

HVLM PFM Hot Standby Vital Logic Module Protection and Filter module.

I/O Input and Output

I/O Assignments The allocation of mnemonics to specify inputs and outputs.

ICS Installation Check System—*WESTRACE* software used by the Signal Engineer to verify that the Configuration Data *PROMs* fitted to an installation are valid and are consistent with the approved design. Used for *HVLM128*-based systems.

IHCL Inter-HVLM Communications Link—a fibre-optic connection used in a hot standby system to transfer data between the main and standby *VLM*s.

INCL Inter NCDM Communications Link. A fibre-optic connection used in a Hot Standby system to transfer data between the main and standby NCDMs.

ILS Internal Logic State—a one-bit storage element which is associated with a mnemonic name.

Image File A copy of an installation's vital or non-vital *CED* stored on a *PC* for use by tools such as *MoviolaW*.

IMB Inter Module Bus—part of the *WESTRACE Backplane*. Provides general purpose parallel data communication between the *VLM* and other WESTRACE modules.

Initialisation (System) This is a time prior to normal operation when the installation determines the current state of the external inputs.

Installation A single physical *WESTRACE* system, comprising up to four standard WESTRACE housings.

A set of railway signalling application data.

Input The input to the *VLE*.

ISIM Interlocking Simulator—a *WESTRACE* tool that enables testing of railway signalling logic in the office prior to commissioning a system.

Ladder Logic A form of boolean logic that is used to define the application data. It consists of relay equivalent logic and is input using the *GCSS* or *CSS*.

Latches These are internal logic states within the installation logic and are shown as relay coils in the ladder logic. They do not have a physical input or output.

LEC Logic Evaluation Card—part of an *NVC/DM*. Performs all (non-vital) logic and communications processing.

LED Light Emitting Diode

Location Case A metal cabinet housing *WESTRACE* equipment.

MB Megabyte

Mnemonic Abbreviated names that consists of numbers and letters to represent particular logic states or functions.

Module Bit Allocation This is the process of allocating mnemonics to *I/O* bits on a module.

MoviolaW MoviolaW is a suite of Microsoft Windows based diagnostic tools for *WESTRACE* Vital Signalling Systems and other railway systems.

Multidrop A serial cable configuration where multiple slave devices are connected to a single cable coming from a master device. The cable can be a single line or loop configuration. See also *Point-to-point*.

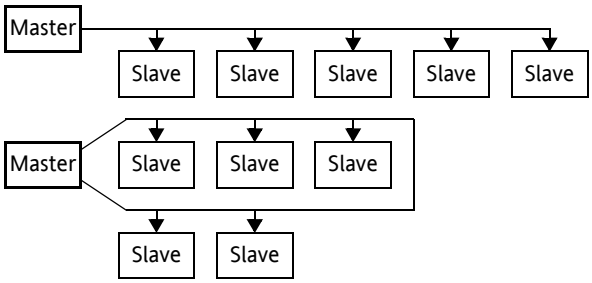

NCDC Network Communication Diagnostic Card—the NCDM's main circuit board.

NCD PFM or NCDC PFM Network Communication Diagnostic Protection and Filter Module

NCDM	Network Communications Diagnostic Module—comprises an NCDC and an NCD PFM.
Negation	Shutting the system down to a safe state.
Non-fatal Fault	Faults such in software, hardware or other equipment that do not compromise the safe operation of the railway. See also *Fatal Fault*.
Non-Vital Telemetry	The means of communicating non-vital data from the *WESTRACE* to an external system such as a local control panel or control centre.
NVC	Non-Vital Communication Module—a *WESTRACE* serial data module used for communicating serially between WESTRACE Installations and a non-vital control system or similar.
NVC/DM	Non-vital Control and Diagnostic Module
NVLM	An acronym representing non-vital logic modules such as the *NVC/DM* or *NCDM*.
OPC	Output Power Card—part of *VLM* and *HVLM128*. A circuit board that controls the *OPCR* and*VSEV*.
OPC-PFM	Output Power Card Protection and Filter Module.
OPCC	Output Power Control Card
OPCM	Output Power Control Module—comprises an *OPCC*, a *VBC* and an *OPC-PFM*.
OPCR	Output Power Control Relay (or followed relay)—used to isolate parallel outputs when the *WESTRACE* system cannot be guaranteed to be operating safely. This relay is used as the final arbiter of system safety.
Output	The output of the VLE, such as a relay or lamp output.
PC	Abbreviation for Personal Computer (historically, an “IBM compatible” personal computer).
PCGE	Personal Computer Graphic Editor—a *PC* based application used to create graphical display files used by *MoviolaW*, WESTCAD and *GSIM*.
PCM	Pulse Code Modulation
PFM	Protection and Filtering Module—used to isolate the internal WESTRACE environment from the external electrical environment by providing screening, filtering and over-voltage protection.
PIOFLT	Parallel Input Output Fault—a vital mnemonic representing a parallel input or output fault.
PM	Protection Module
Point-to-point	A cable configuration where a separate cable is used to link two systems. See also *Multidrop*.
Printouts	Output from a computer driven printer.

PRM	Portable Radio Monitor
PROM	Programmable Read-Only Memory—a computer memory device which retains its contents without power.
PROM Program Form	The printed record of *PROM* programming having taken place.
PROM Programming	The process used to store data into *PROM*s.
PSU	Power Supply Unit
PTM	Portable Transponder Module
RAM	Random Access Memory
RS232-C	An electrical interface standard used for serial connection of one device to another (*Point-to-point*) for the purpose of data communications.
RS422	An electrical interface standard that uses differential signal levels allowing operation over longer distances.
RS485	Electrically similar to *RS422* but also supports *Multidrop* operation.
RSE	Railway Signalling Equipment
RTC	Real Time Clock
Rung	A part of Ladder Logic. A rung is the group of logic (relay equivalent contacts) that control a latch or output (relay equivalent coil).
SDLC	Synchronous Data-Link Protocol—see *HDLC*.
SIL	Safety (or sometimes Software) Integrity Level
Simulation	Testing of the *WESTRACE* Application Logic on a *PC* or other device rather than the actual system.
Slot	This is a space in a housing where *WESTRACE* modules can be inserted. WESTRACE modules occupy one or more slots.
Source File	A file that contains the data that has been entered into the *GCSS* or *CSS*.
Surge Arrester	Any device for controlling electrical surges on circuits entering a location, including gas discharge arresters, semiconductor arresters, or arresters combining both types.
Telemetry	Data communication system. The process of transmitting data between two points.
Temporary Approach Control	The process of forcing a timed approach control on a signal to minimise entrance speed. The total process or applying, retaining and removing the control must allow it to be vital.
Time-of-Day Timer	A timer whose output is set at a particular time of day.

Timer	A device or circuit that provides time signals at regular, specified intervals for purposes of controlling a sequence of events or synchronising events in separate operations. Ladder logic uses software timers.
Timestamp	Indicates the date and time at which a logged event, fault or operation occurred.
Transfer States	A set of logic states that will be able to be transferred from the *NVC/DM* to the *VLM* and vice versa.
UHVBC	Universal Hot Standby Vital Backplane Card—interconnects the *VLC*, the *OPCC* and the *OPC-PFM*. Also contains links for setting the installation address.
VBC	Vital Backplane Card—interconnects the *VLC*, the *OPCC*, the *CEC* (original-*VLC* only) and the *OPC-PFM*. Also contains links for setting the installation address.
Vital	Pertaining to system safety. Used an adjective to describe a process, function or equipment that, when not operating correctly, can adversely affect the safety of a system.
Vital Bar	Generic term to refer to Vital Blocking and Temporary Approach Control.
Vital Blocking	Process used to prevent the Signalling System to allow sections of track being allowed to be occupied. The total process or applying, retaining and removing the block must allow the blocking to be vital
Vital Communications	Communication of data that required for the safe operation of the *WESTRACE* system. Vital communication is between WESTRACE systems.
VLC	Vital Logic Card—a general term for the original VLC, the *HVLC,* the *VLC5* and the *VLC6*.
VLC5	Vital Logic Card for the *VLM5*.
VLC6	Vital Logic Card for the *VLM6*.
VLE	Vital Logic Equipment—is the physical *WESTRACE* equipment, both vital and non-vital.
VLM	Vital Logic Module—*WESTRACE* which controls the operation of each WESTRACE system. It performs all logic processing and supervises communication between each WESTRACE module and itself. This is a collective term for the original *VLM1*, the *HVLM128*, the *VLM5* and the *VLM6*.
VLM1	Vital Logic Module1—the name given in the WRSA WESTRACE manuals to the original and largely superseded vital logic module which was known as the VLM.
VLM128	See HVLM128.
VLM128a	See HVLM128a.
VLM5	Vital Logic Module—has essentially the same functionality as the *HVLM128* but has a greater capacity.

VLM6 Vital Logic Module—has essentially the same capacity as the *VLM5* but can also provide vital communications over a network to connected *WESTRACE* systems when used in conjuction with an *NCDM*.

VLOM Vital Lamp Output Module—*WESTRACE* module used for driving relays or similar loads.

VPIM Vital Parallel Input Module—*WESTRACE* module used for accepting vital parallel inputs into a WESTRACE installation.

VROM Vital Relay Output Module—*WESTRACE* module used for driving signalling relays or similar loads.

VSEV Vital Serial Enable Voltage—a vital control voltage used to enable vital serial communications to and from a *WESTRACE* installation.

VTC Vital Telemetry Continuous Module—a *WESTRACE* module used for vital communication (17 bit) between two WESTRACE systems.

WCM *WESTECT* Communication Module—used to communicate signalling information from an interlocking or *WESTECT Encoder* to an *ATP* equipped train. It is used as part of the *WESTECT ATP* system.

WESTECT **WES**tinghouse automatic train Pro**TECT**ion.

WESTECT ATP WESTECT **A**utomatic **T**rain **P**rotection is a Westinghouse Rail Systems Australia proprietary system that overlays on a *WESTRACE* signalling system and prevents driver error from endangering the train.

WESTECT Encoder In its simplest form, a WESTECT Encoder comprises a *WESTRACE* system, a communications rack and an antenna system.

WESTRACE WESTRACE is an acronym for **WES**tinghouse **T**rain **R**adio **A**dvanced **C**ontrol **E**quipment. It is a modular, safety critical, programmable electronic signalling system that has been designed for safety control systems for Railway Signalling.

WESTRACE I/O Module General term for any module designed to be plugged into a slot in a *WESTRACE* housing, excluding diagnostic and logic processing modules.

WNC WESTRACE Network Communications—generic name for complete *WESTRACE* system using and *NCDM* to facilitate communications over an Ethernet network.

WNCM WESTRACE Network Communications Module—comprises the *VLM6* and *NCDM*.

WRSA Westinghouse Rail Systems Australia

WSA/S2 A serial telemetry protocol developed by Westinghouse Rail Systems Australia.

WSL/S2 A serial telemetry protocol developed by Westinghouse Signals Limited (UK).

Reader's Comments

Westinghouse Rail Systems Australia values your thoughts as the user of this document. We would be grateful to receive your views about this document and welcome any suggestions for improvement. Please send your comments to:

The Manager, Technology and Training
Westinghouse Rail Systems Australia
179–185 Normanby Road (Locked Bag 66), South Melbourne, VIC 3205

Phone +61 3 9233 8840 Fax +61 3 9233 8702 Email wrsa-training@wrsa.com.au

Document Name:

WESTRACE First-Line Maintenance Manual

WRTOFLMM-WRSI, Issue 10.0

Document Owner: _____

_____

Contact Name: _____

Address: _____

_____

_____

Email: _____

On a scale of 1 to 10, please rate this document for being suitable to your needs. A rating of 0 means this document is of no benefit; a rating of 10 means it is completely satisfactory for the intended purpose.

Rating: 0 5 10

no benefit **very useful**

Comments: _____

_____

_____

_____

_____

_____

_____

_____

Signed: _____ Dated: _____

Comments are continued on the following _____ pages.