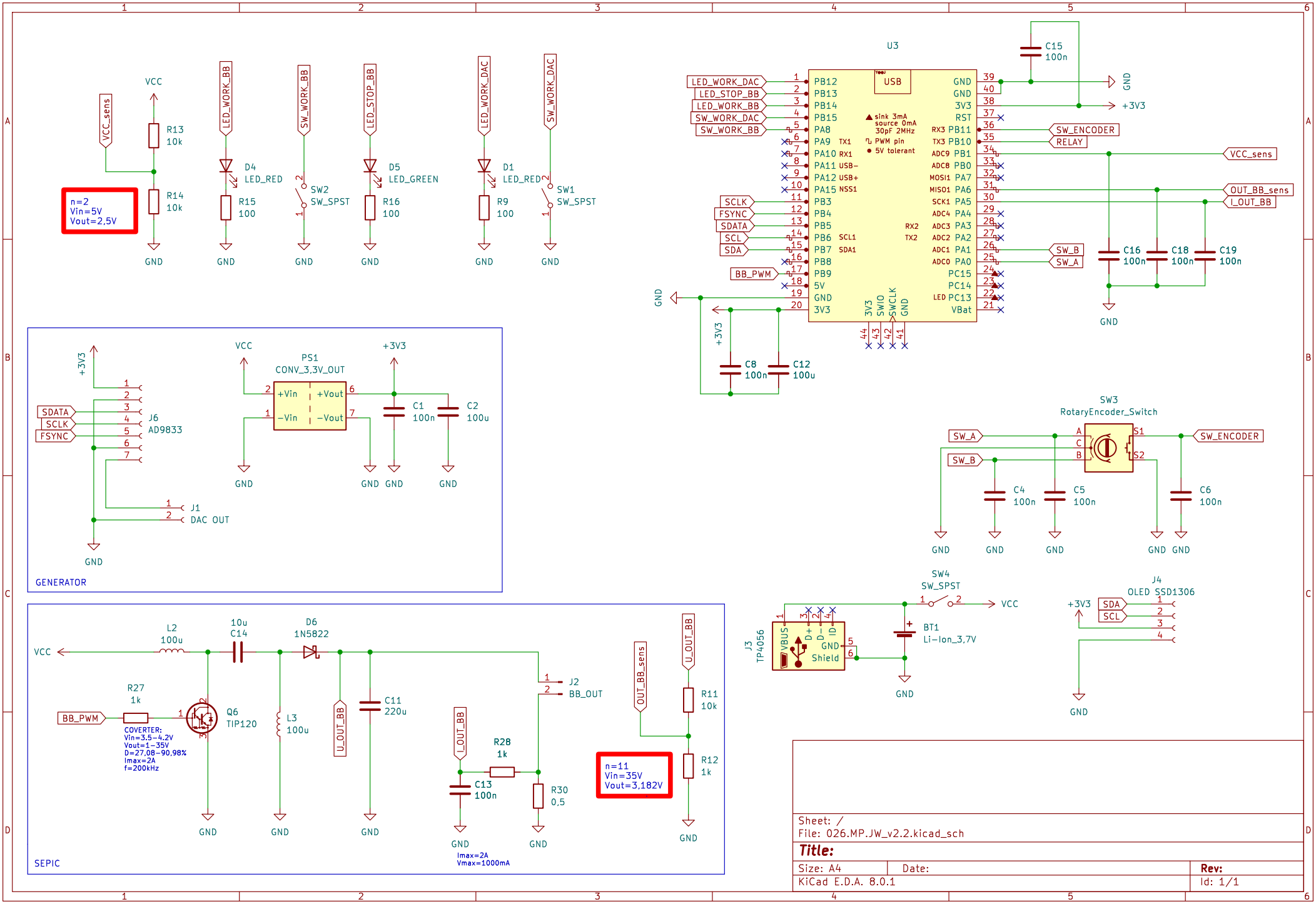
VCC_sens
VCC
R13
10k
R14
10k
n=2
Vin=5V
Vout=2,5V
GND
LED_WORK_BB
D4
LED_RED
R15
100
SW_WORK_BB
SW2
SW_SPST
LED_STOP_BB
D5
LED_GREEN
R16
100
LED_WORK_DAC
D1
LED_RED
R9
100
SW_WORK_DAC
SW1
SW_SPST
U3
USB
LED_WORK_DAC
LED_STOP_BB
LED_WORK_BB
SW_WORK_DAC
SW_WORK_BB
PB12
PB13
PB14
PB15
PA8
PA9 TX1
PA10 RX1
PA11 USB-
PA12 USB+
PA15 NSS1
PB3
PB4
PB5
PB6 SCL1
PB7 SDA1
PB8
PB9
5V
GND
3V3
SCLK
FSYNC
SDATA
SCL
SDA
BB_PWM
sink 3mA
source 0mA
30pF 2MHz
PWM pin
5V tolerant
GND
GND
3V3
RST
RX3 PB11
TX3 PB10
ADC9 PB1
ADC8 PB0
MOSI1 PA7
MISO1 PA6
SCK1 PA5
ADC4 PA4
ADC3 PA3
ADC2 PA2
ADC1 PA1
ADC0 PA0
PC15
PC14
LED PC13
VBat
RX2
TX2
3V3 SWIO SWCLK GND
SW_ENCODER
RELAY
VCC_sens
OUT_BB_sens
I_OUT_BB
SW_B
SW_A
C15
100n
C16
100n
C18
100n
C19
100n
C8
100n
C12
100u
GENERATOR
+3V3
J6
AD9833
SDATA
SCLK
FSYNC
J1
DAC OUT
PS1
CONV_3,3V_OUT
+Vin
-Vin
+Vout
-Vout
C1
100n
C2
100u
SW3
RotaryEncoder_Switch
A
C
B
S1
S2
C4
100n
C5
100n
C6
100n
SW4
SW_SPST
BT1
Li-Ion_3,7V
J3
TP4056
VBUS
D+
D-
ID
GND
Shield
J4
OLED SSD1306
SDA
SCL
SEPIC
L2
100u
10u
C14
D6
1N5822
R27
1k
BB_PWM
Q6
TIP120
COVERTER:
Vin=3.5-4.2V
Vout=1-35V
D=27,08-90,98%
Imax=2A
f=200kHz
L3
100u
U_OUT_BB
C11
220u
I_OUT_BB
R28
1k
C13
100n
R30
0,5
Imax=2A
Vmax=1000mA
J2
BB_OUT
OUT_BB_sens
R11
10k
R12
1k
n=11
Vin=35V
Vout=3,182V
Sheet: /
File: 026.MP.JW_v2.2.kicad_sch
Title:
Size: A4
Date:
Rev:
KiCad E.D.A. 8.0.1
Id: 1/1