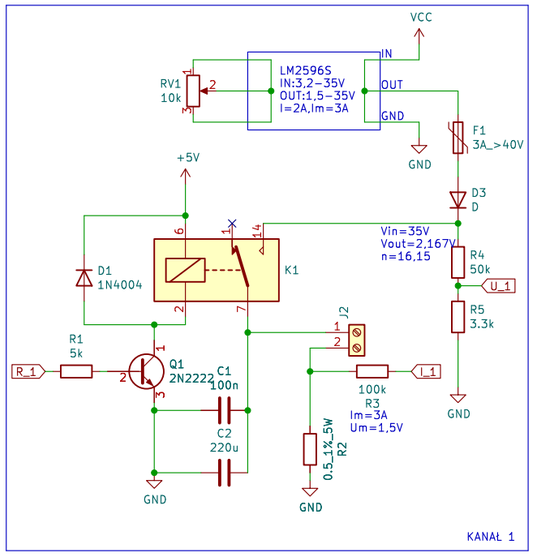

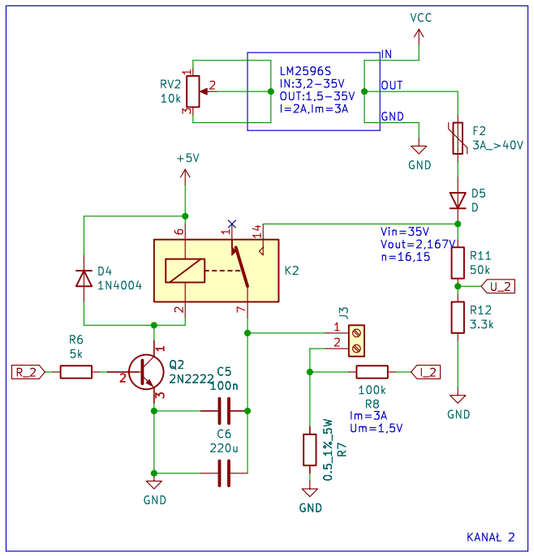

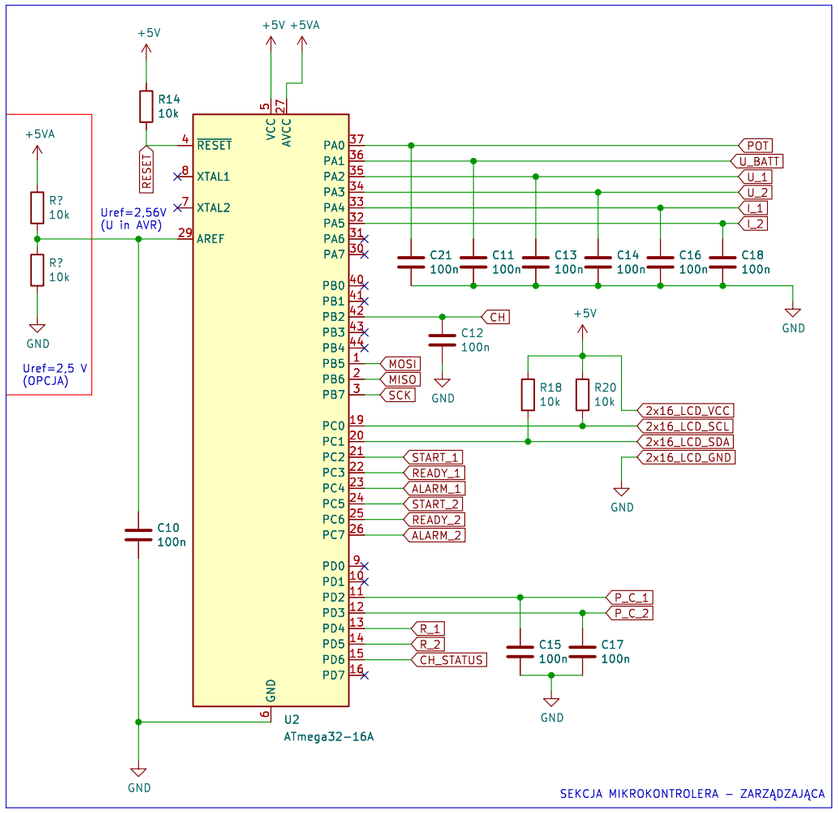

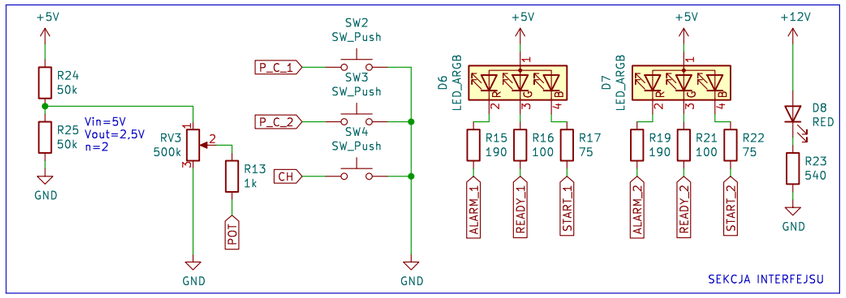

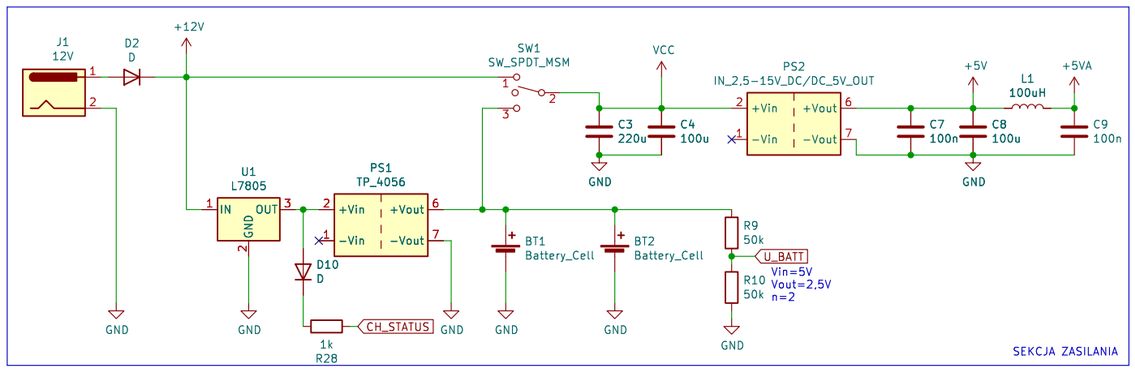

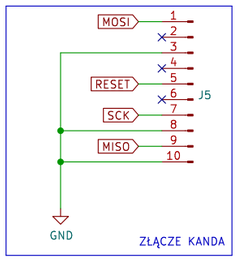

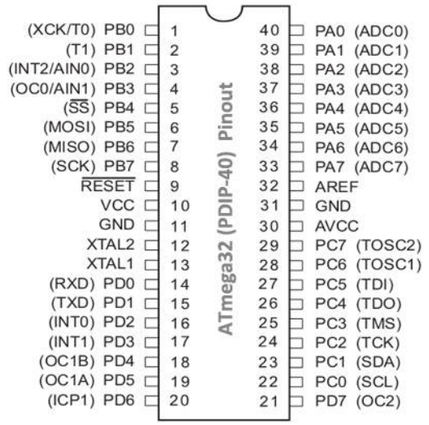

Uref= 2,56V

J.W.

Sheet: /
File: 01–DIAGRAM.kicad_sch

Title:

Size: A3	Date: 2023–08–27	**Rev: 00**
KiCad E.D.A. kicad 7.0.7		Id: 1/1