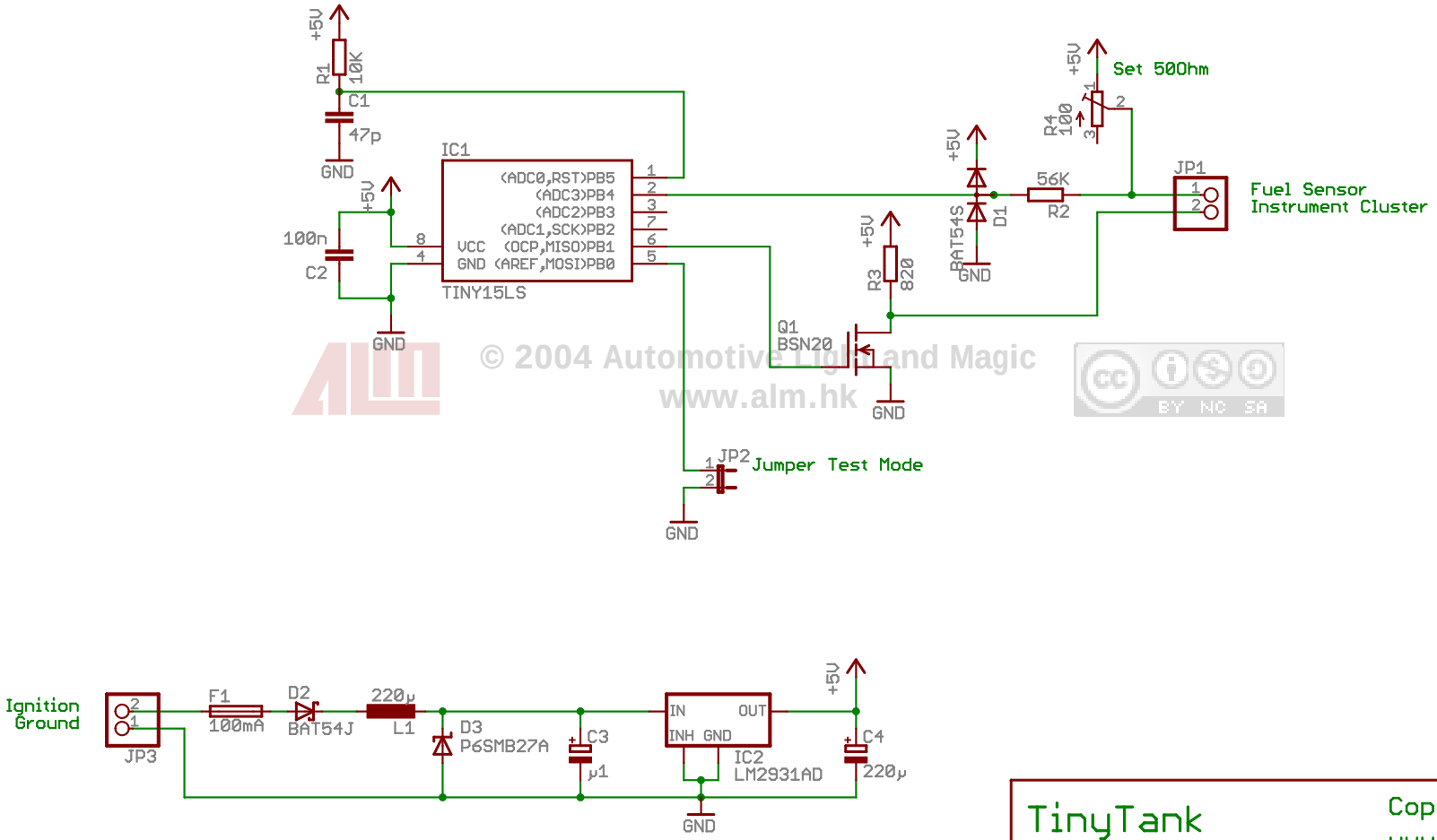

© 2004 Automotive Light and Magic
www.alm.hk
BY NC SA

TinyTank

Copyright 2004 ALM
www.alm.hk

TITLE: TinyTank

Document Number:

REV:

Date: 28.08.2004 19:32:10

Sheet: 1/1