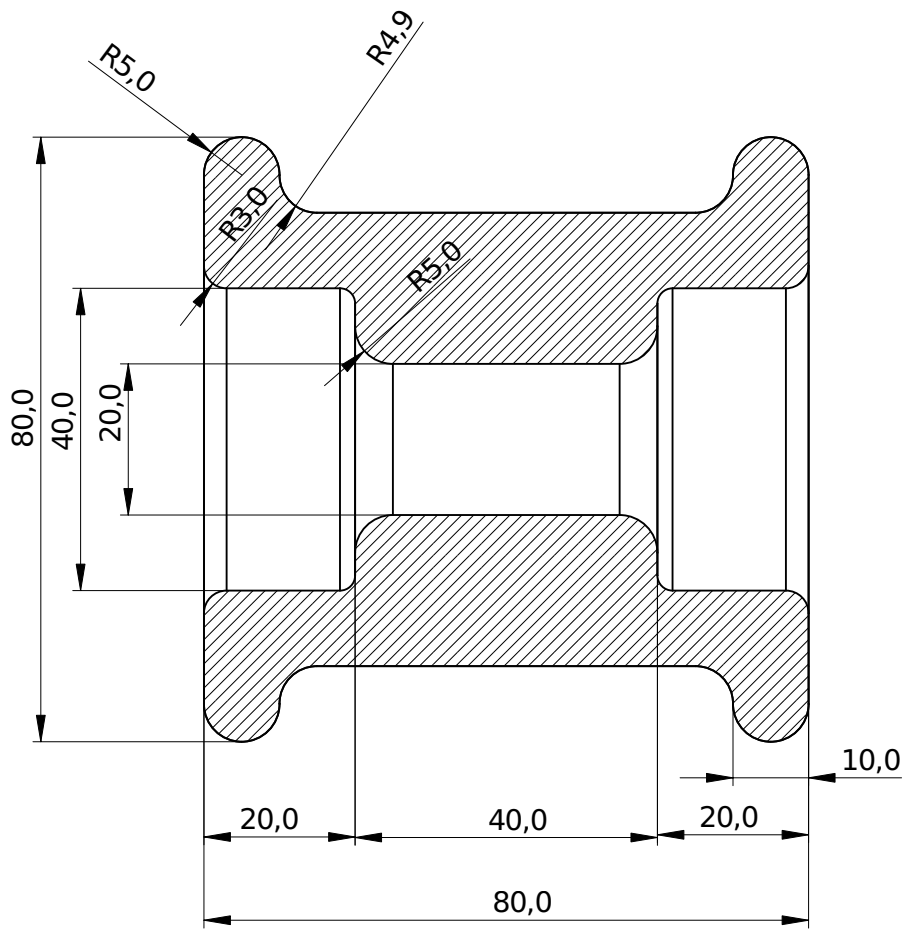

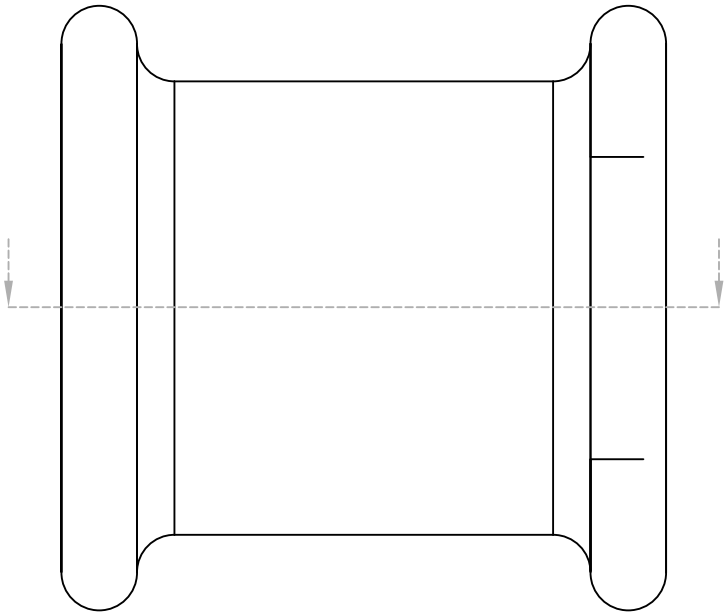

DESIGNED BY: Designed by Name DATE: Date		Title Subtitle		
SIZE A4				
SCALE Scale	WEIGHT (kg) Weight	DRAWING NUMBER Drawing number	SHEET Sheet	

This drawing is our property; it can't be reproduced or communicated without our written consent.

G	_
F	_
E	_
D	_
C	_
B	_
A	_