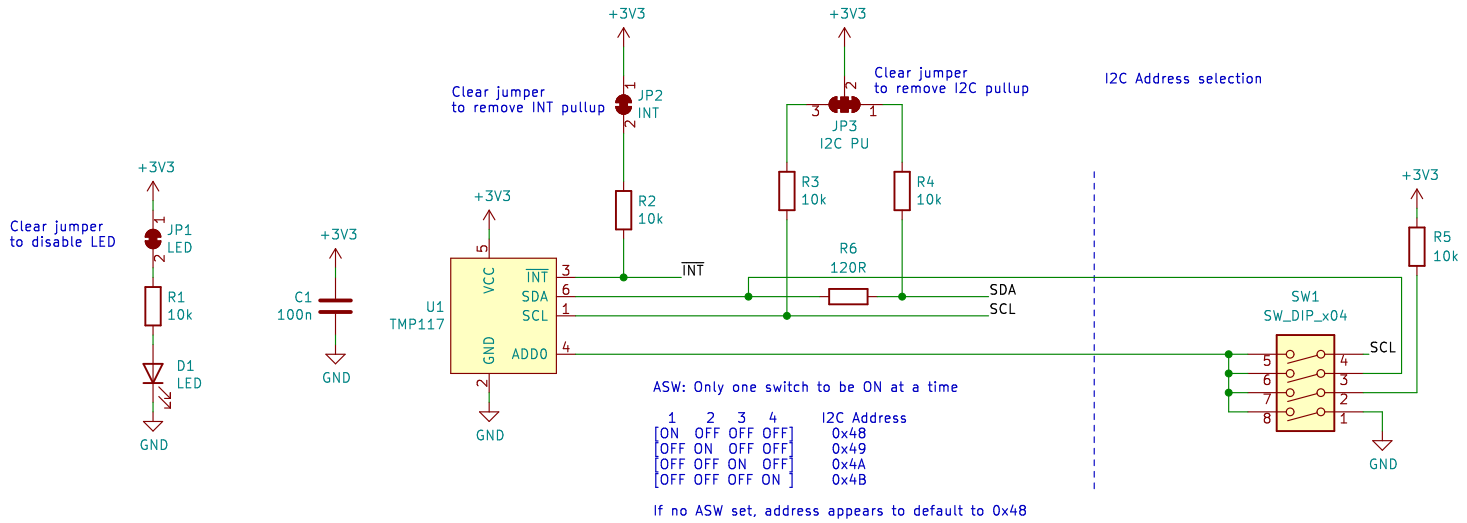

JST connectors

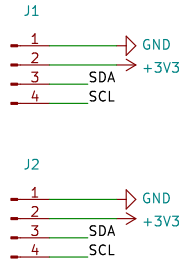

breakout header

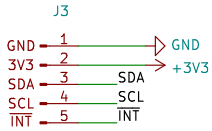

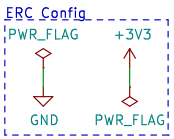

based off: https://www.sparkfun.com/products/15805
License: CCASAv4.0 http://creativecommons.org/licenses/by-sa/4.0
PiicoDev and the PiicoDev logo are trademarks of Core Electronics Pty Ltd.
Designed at Core Electronics by Michael Ruppe

Sheet: /
File: PiicoDev-Precision-Temperature-Sensor-TMP117.kicad_sch

Title: PiicoDev Precision Temperature Sensor TMP117

Size: A4	Date: 2022-03-21	Rev: 12
KiCad E.D.A. kicad (6.0.4)		Id: 1/1