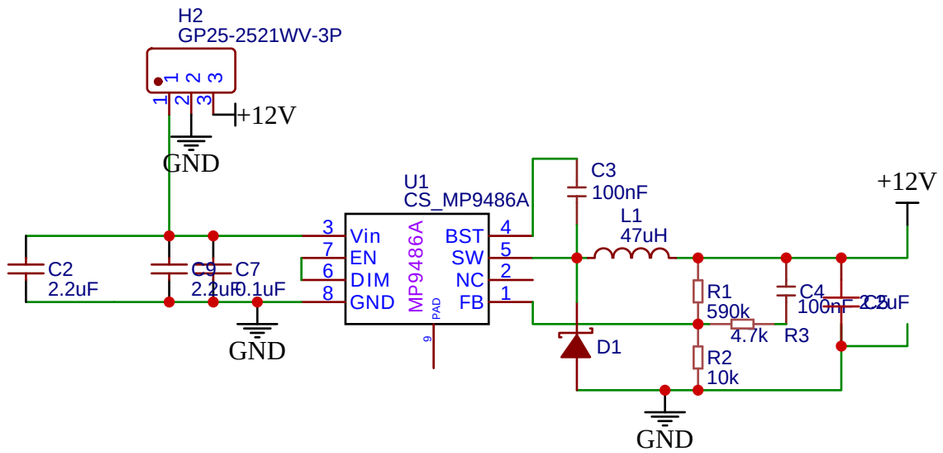

TITLE: MP9486A		REV: 1.0
EasyEDA	Company: RARP	Sheet: 1/1
	Date: 2020-09-05 Drawn By: 禡辈袅緩杁吹聃熂	