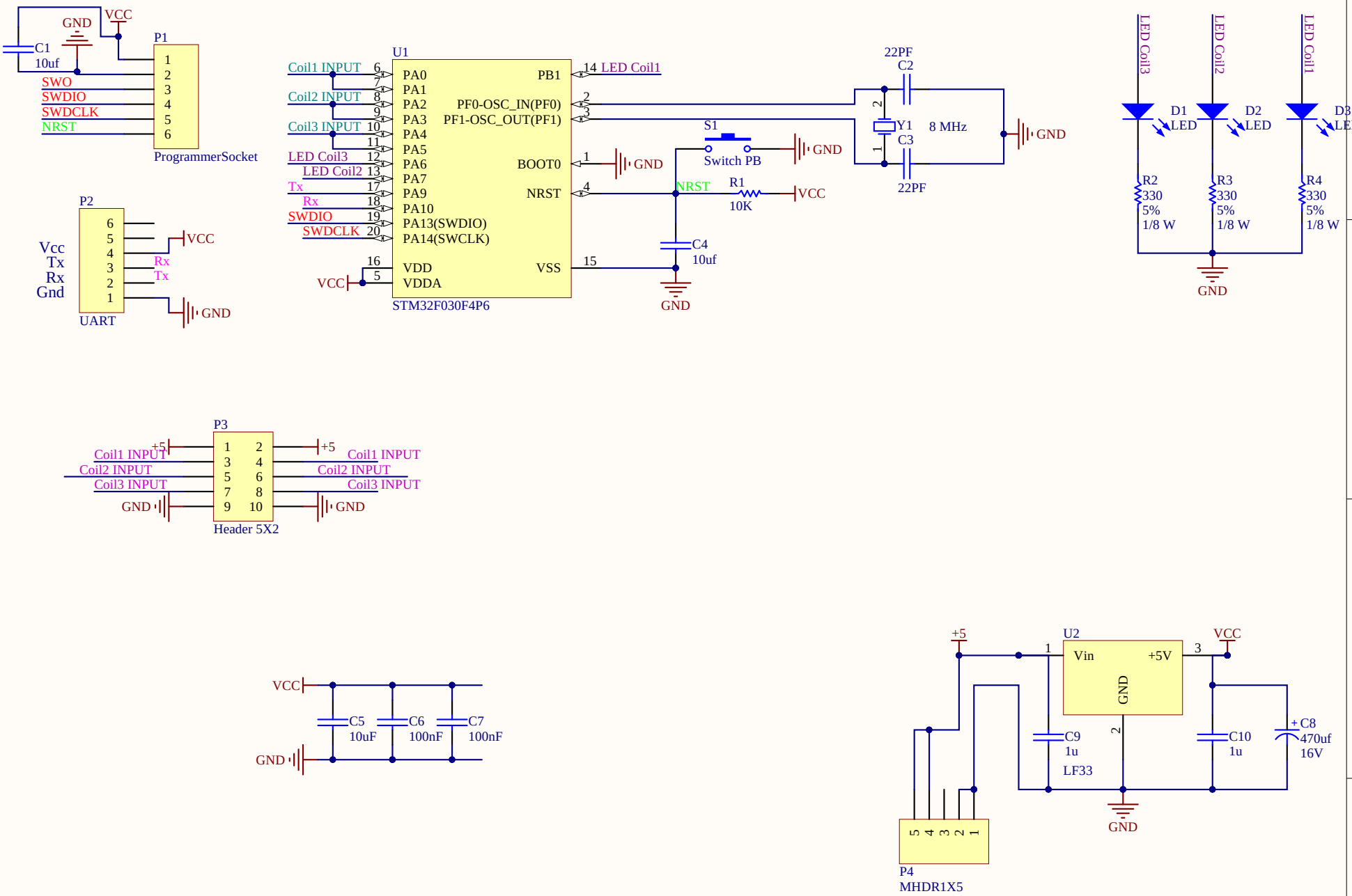

Title		
Size A	Number	Revision
Date: 8/12/2016		Sheet of
File: E:\W\..\Controll Board_SCH.SchDoc		Drawn By: