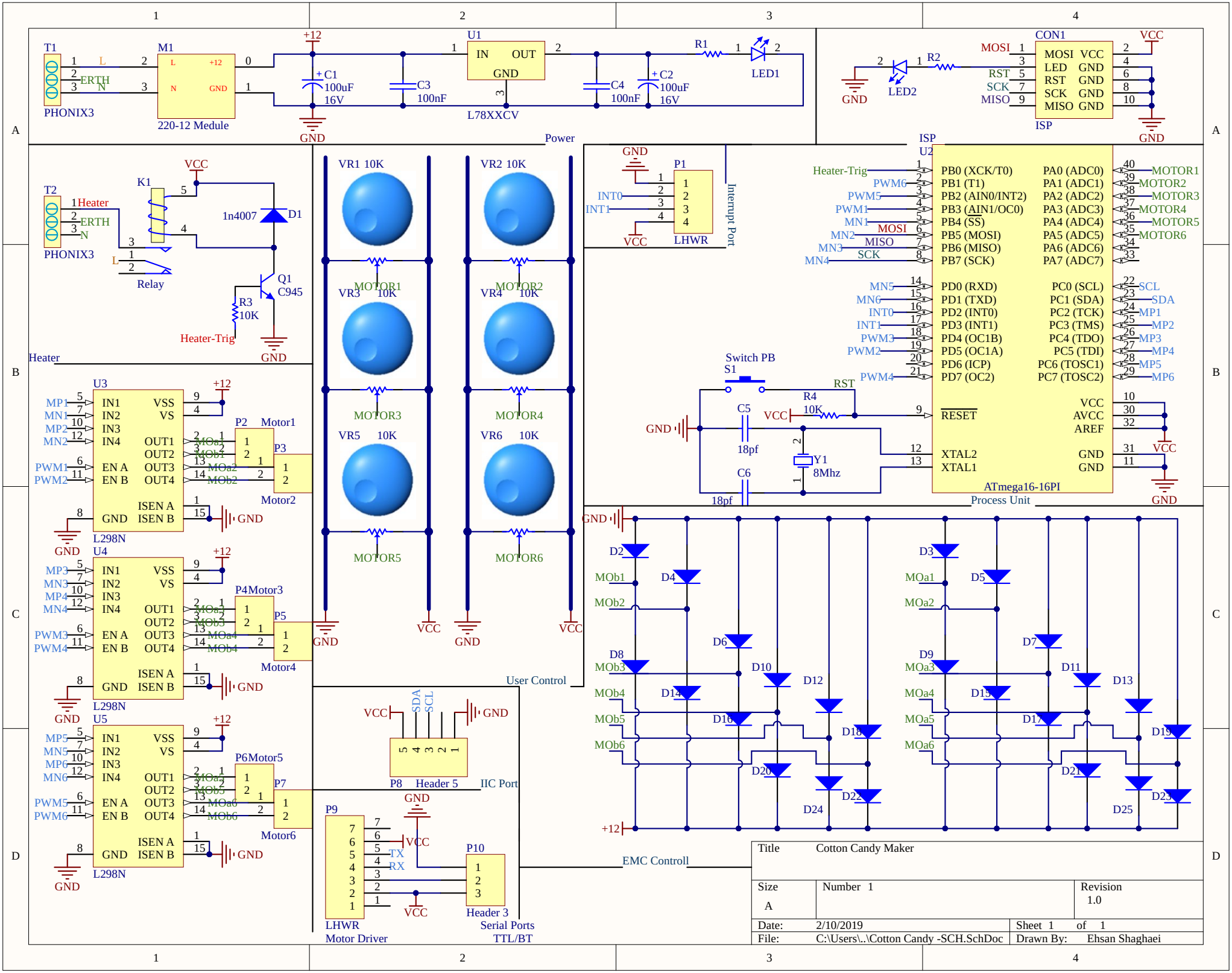
T1
PHONIX3
M1
220-12 Medule
+12
C1 100uF 16V
C3 100nF
U1
IN OUT GND
L78XXCV
C4 100nF
C2 100uF 16V
R1
LED1
GND
Power
CON1
MOSI MISO RST SCK
MOSI VCC LED GND RST GND SCK GND MISO GND
ISP
LED2
R2
VCC
T2
PHONIX3
1Heater
ERTH
N
K1
Relay
1n4007
D1
Q1
C945
R3 10K
Heater-Trig
Heater
VR1 10K
VR2 10K
VR3 10K
VR4 10K
VR5 10K
VR6 10K
MOTOR1
MOTOR2
MOTOR3
MOTOR4
MOTOR5
MOTOR6
P1
LHWR
INT0
INT1
Interrupt Port
U2
ATmega16-16PI
Process Unit
PB0 (XCK/T0)
PB1 (T1)
PB2 (AIN0/INT2)
PB3 (AIN1/OC0)
PB4 (SS)
PB5 (MOSI)
PB6 (MISO)
PB7 (SCK)
PD0 (RXD)
PD1 (TXD)
PD2 (INT0)
PD3 (INT1)
PD4 (OC1B)
PD5 (OC1A)
PD6 (ICP)
PD7 (OC2)
RESET
XTAL2
XTAL1
PA0 (ADC0)
PA1 (ADC1)
PA2 (ADC2)
PA3 (ADC3)
PA4 (ADC4)
PA5 (ADC5)
PA6 (ADC6)
PA7 (ADC7)
PC0 (SCL)
PC1 (SDA)
PC2 (TCK)
PC3 (TMS)
PC4 (TDO)
PC5 (TDI)
PC6 (TOSC1)
PC7 (TOSC2)
VCC
AVCC
AREF
GND
GND
Switch PB
S1
R4 10K
C5 18pf
C6 18pf
Y1 8Mhz
U3
L298N
U4
L298N
U5
L298N
IN1 IN2 IN3 IN4 EN A EN B
VSS VS
OUT1 OUT2 OUT3 OUT4
ISEN A ISEN B
P2 Motor1
P3 Motor2
P4 Motor3
P5 Motor4
P6 Motor5
P7 Motor6
User Control
P8 Header 5
IIC Port
SDA
SCL
P9
LHWR
Motor Driver
P10
Header 3
Serial Ports
TTL/BT
TX
RX
EMC Controll
D2 D3 D4 D5 D6 D7 D8 D9 D10 D11 D12 D13 D14 D15 D16 D17 D18 D19 D20 D21 D22 D23 D24 D25
MOb1 MOb2 MOb3 MOb4 MOb5 MOb6
MOa1 MOa2 MOa3 MOa4 MOa5 MOa6
Title Cotton Candy Maker
Size A
Number 1
Revision 1.0
Date: 2/10/2019
Sheet 1 of 1
File: C:\Users\..\Cotton Candy -SCH.SchDoc
Drawn By: Ehsan Shaghaei