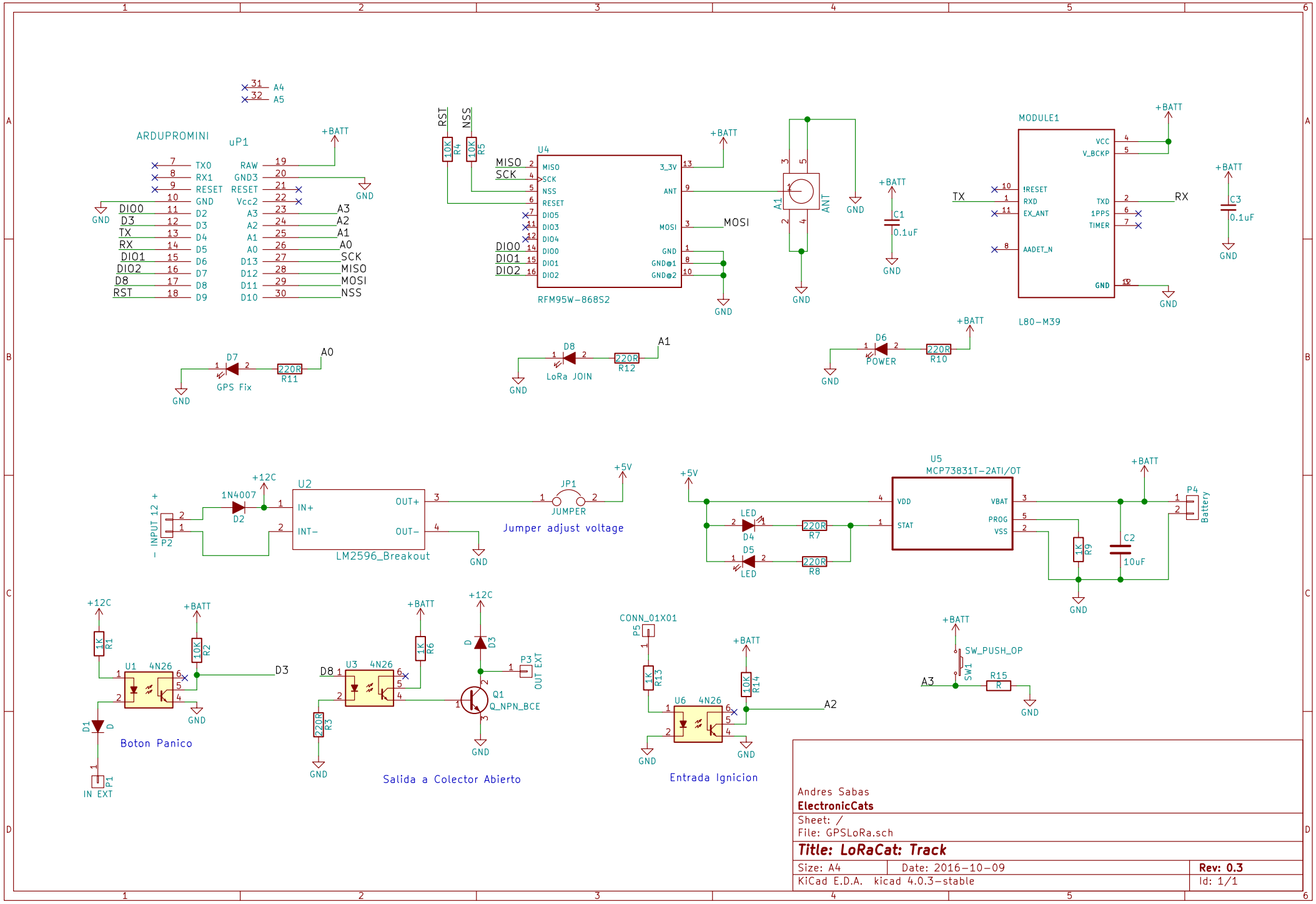
ARDUPROMINI
uP1
U4
RFM95W-868S2
MODULE1
L80-M39
U2
LM2596_Breakout
JUMPER
Jumper adjust voltage
U5
MCP73831T-2ATI/OT
Battery
Boton Panico
Salida a Colector Abierto
Entrada Ignicion
Andres Sabas
ElectronicCats
Sheet: /
File: GPSLoRa.sch
Title: LoRaCat: Track
Size: A4
Date: 2016-10-09
Rev: 0.3
KiCad E.D.A. kicad 4.0.3-stable
Id: 1/1