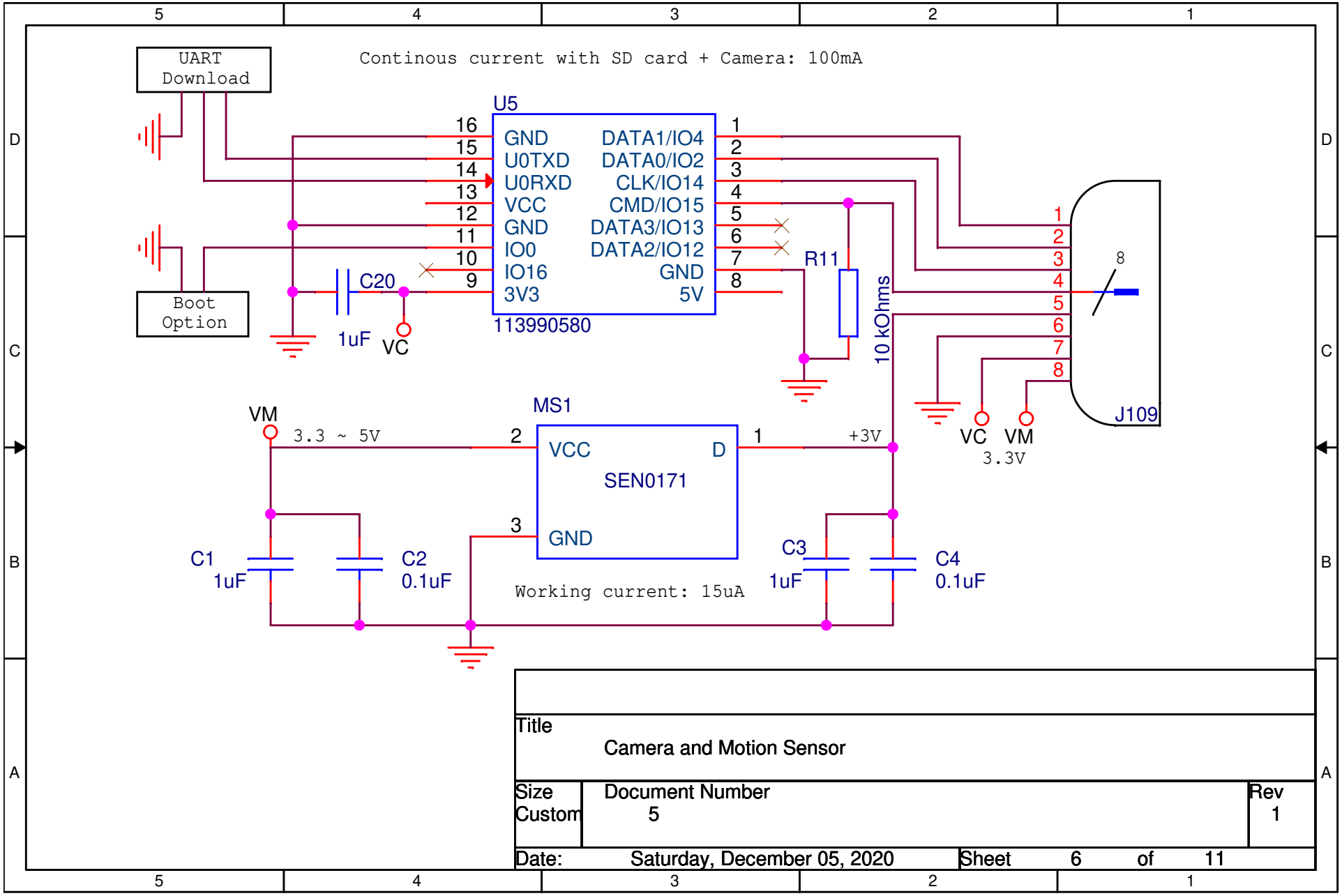

Title	Camera and Motion Sensor	
Size Custom	Document Number 5	Rev 1
Date: Saturday, December 05, 2020	Sheet 6 of 11	