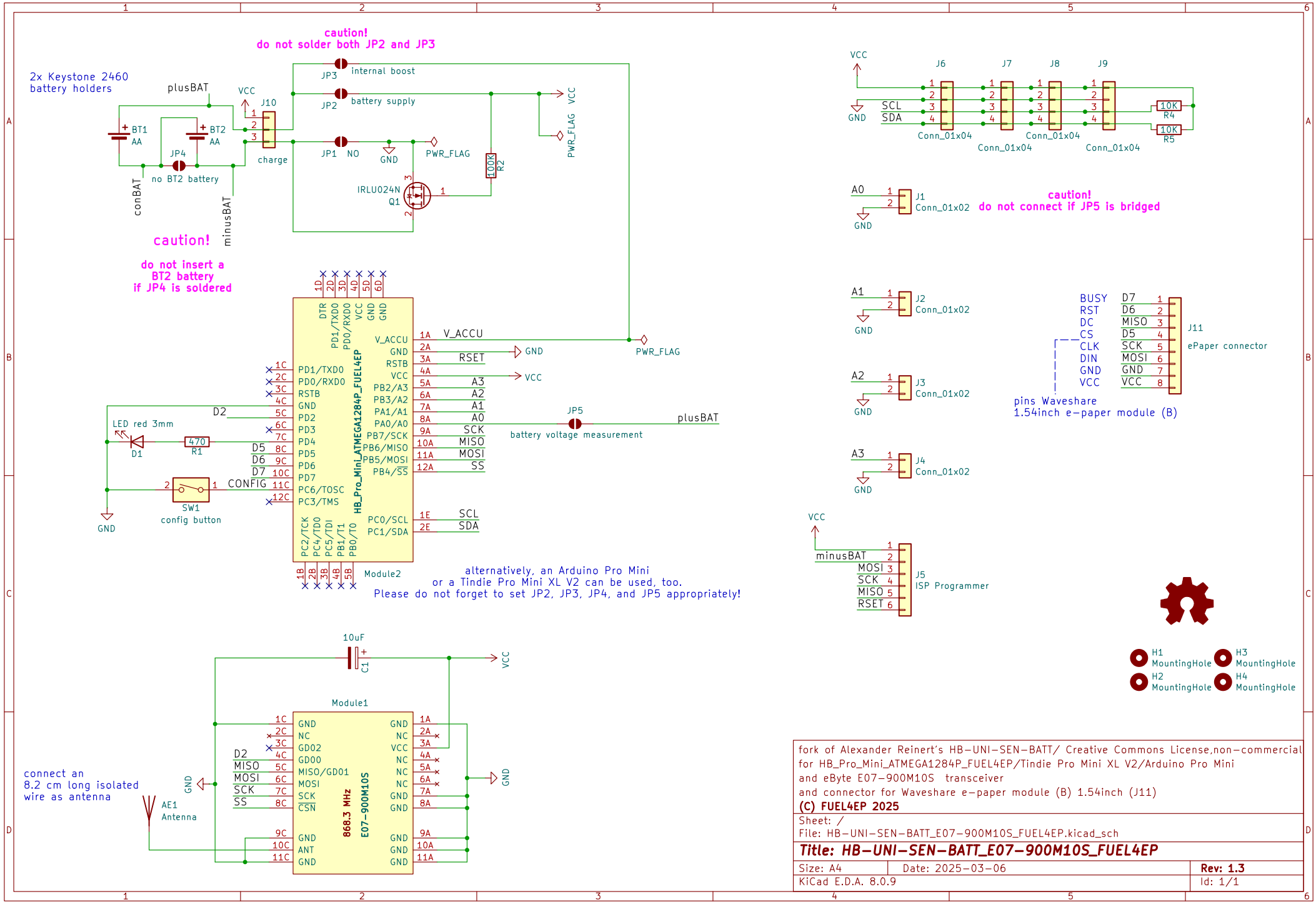

fork of Alexander Reinert's HB-UNI-SEN-BATT/ Creative Commons License,non-commercial
for HB_Pro_Mini_ATMEGA1284P_FUEL4EP/Tindie Pro Mini XL V2/Arduino Pro Mini
and eByte E07-900M10S transceiver
and connector for Waveshare e-paper module (B) 1.54inch (J11)

(C) FUEL4EP 2025

Sheet: /
File: HB-UNI-SEN-BATT_E07-900M10S_FUEL4EP.kicad_sch

Title: HB-UNI-SEN-BATT_E07-900M10S_FUEL4EP

Size: A4	Date: 2025-03-06	**Rev: 1.3**
KiCad E.D.A. 8.0.9		Id: 1/1