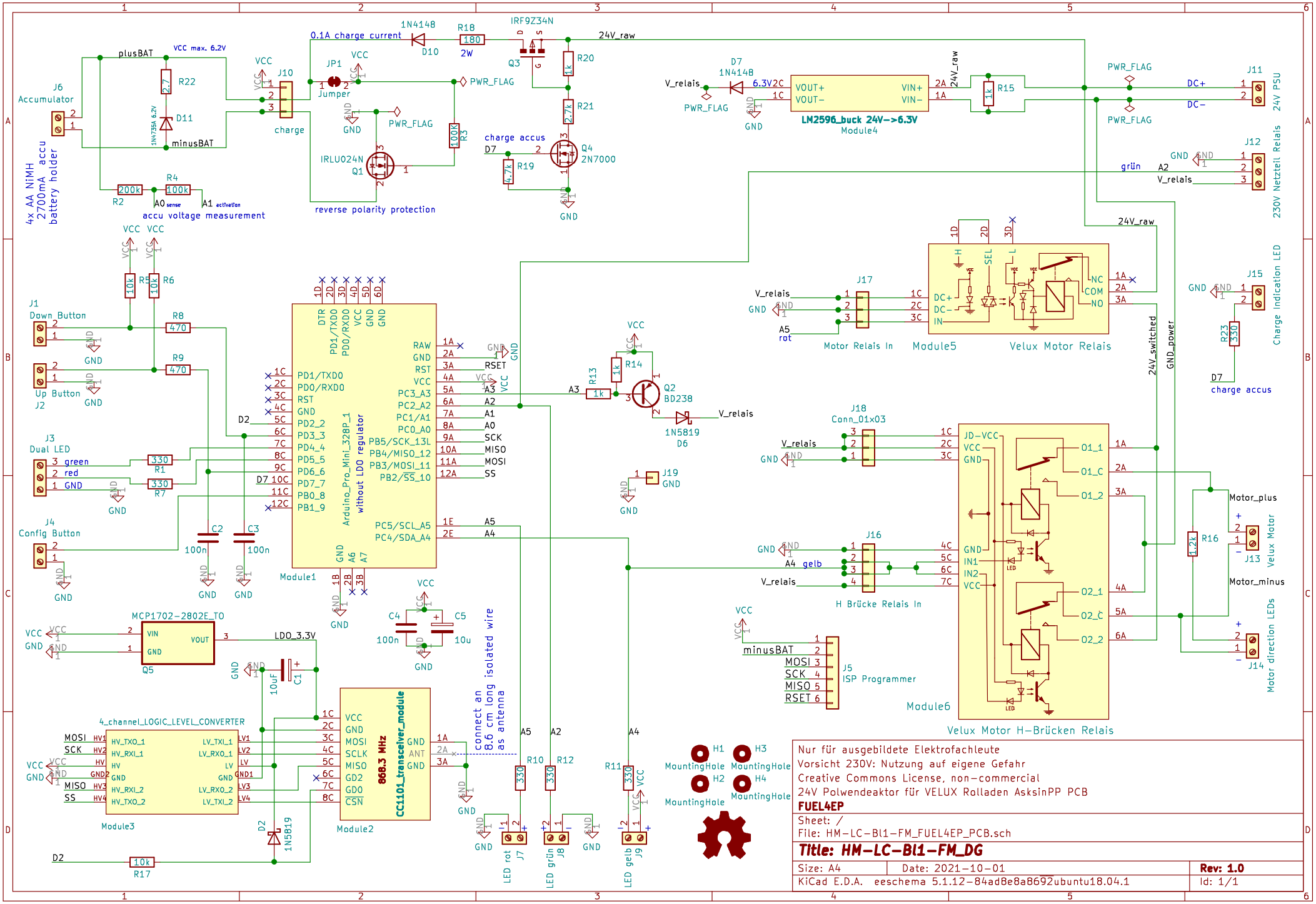
J6
Accumulator
4x AA NiMH
2700mA accu
battery holder
plusBAT
minusBAT
VCC max. 6.2V
R22
2.7
D11
1N4735A 6.2V
R2
200k
R4
100k
A0 sense
A1 activation
accu voltage measurement
J10
charge
0.1A charge current
1N4148
D10
R18
180
2W
IRF9Z34N
Q3
24V_raw
JP1
Jumper
PWR_FLAG
IRLU024N
Q1
R3
100k
reverse polarity protection
R20
1k
R21
2.7k
charge accus
D7
R19
4.7k
Q4
2N7000
D7
1N4148
V_relais
6.3V
LM2596_buck 24V->6.3V
Module4
VOUT+
VOUT-
VIN+
VIN-
R15
1k
J11
24V PSU
DC+
DC-
J12
230V Netzteil Relais
grün
A2
V_relais
J1
Down Button
J2
Up Button
J3
Dual LED
green
red
GND
R1
330
R7
330
J4
Config Button
R5
10k
R6
10k
R8
470
R9
470
C2
100n
C3
100n
Module1
Arduino_Pro_Mini_328P_1
without LDO regulator
DTR
PD1/TXD0
PD0/RXD0
RST
GND
PD2_2
PD3_3
PD4_4
PD5_5
PD6_6
PD7_7
PB0_8
PB1_9
RAW
RSET
VCC
PC3_A3
PC2_A2
PC1/A1
PC0_A0
PB5/SCK_13L
PB4/MISO_12
PB3/MOSI_11
PB2/SS_10
PC5/SCL_A5
PC4/SDA_A4
A6
A7
A3
A2
A1
A0
SCK
MISO
MOSI
SS
A5
A4
R13
1k
R14
1k
Q2
BD238
1N5819
D6
J19
GND
J17
Motor Relais In
Module5
Velux Motor Relais
NC
COM
NO
SEL
24V_switched
GND_power
J18
Conn_01x03
J16
H Brücke Relais In
A4 gelb
Module6
Velux Motor H-Brücken Relais
JD-VCC
O1_1
O1_C
O1_2
O2_1
O2_C
O2_2
IN1
IN2
J15
Charge Indication LED
R23
330
D7
charge accus
R16
1.2k
Motor_plus
Motor_minus
J13
Velux Motor
J14
Motor direction LEDs
MCP1702-2802E_TO
Q5
VIN
VOUT
LDO_3.3V
C1
10uF
C4
100n
C5
10u
J5
ISP Programmer
minusBAT
MOSI
SCK
MISO
RSET
4_channel_LOGIC_LEVEL_CONVERTER
Module3
HV_TXO_1
HV_RXI_1
HV
GND
HV_RXI_2
HV_TXO_2
LV_TXI_1
LV_RXO_1
LV
LV_RXO_2
LV_TXI_2
D2
1N5819
R17
10k
868.3 MHz
CC1101_transceiver_module
Module2
VCC
GND
MOSI
SCLK
MISO
GD2
GD0
CSN
ANT
connect an
8.6 cm long isolated wire
as antenna
R10
330
R12
330
R11
330
LED rot
J7
LED grün
J8
LED gelb
J9
H1
H2
H3
H4
MountingHole
Nur für ausgebildete Elektrofachleute
Vorsicht 230V: Nutzung auf eigene Gefahr
Creative Commons License, non-commercial
24V Polwendeaktor für VELUX Rolladen AsksinPP PCB
FUEL4EP
Sheet: /
File: HM-LC-Bl1-FM_FUEL4EP_PCB.sch
Title: HM-LC-Bl1-FM_DG
Size: A4
Date: 2021-10-01
Rev: 1.0
KiCad E.D.A. eeschema 5.1.12-84ad8e8a8692ubuntu18.04.1
Id: 1/1