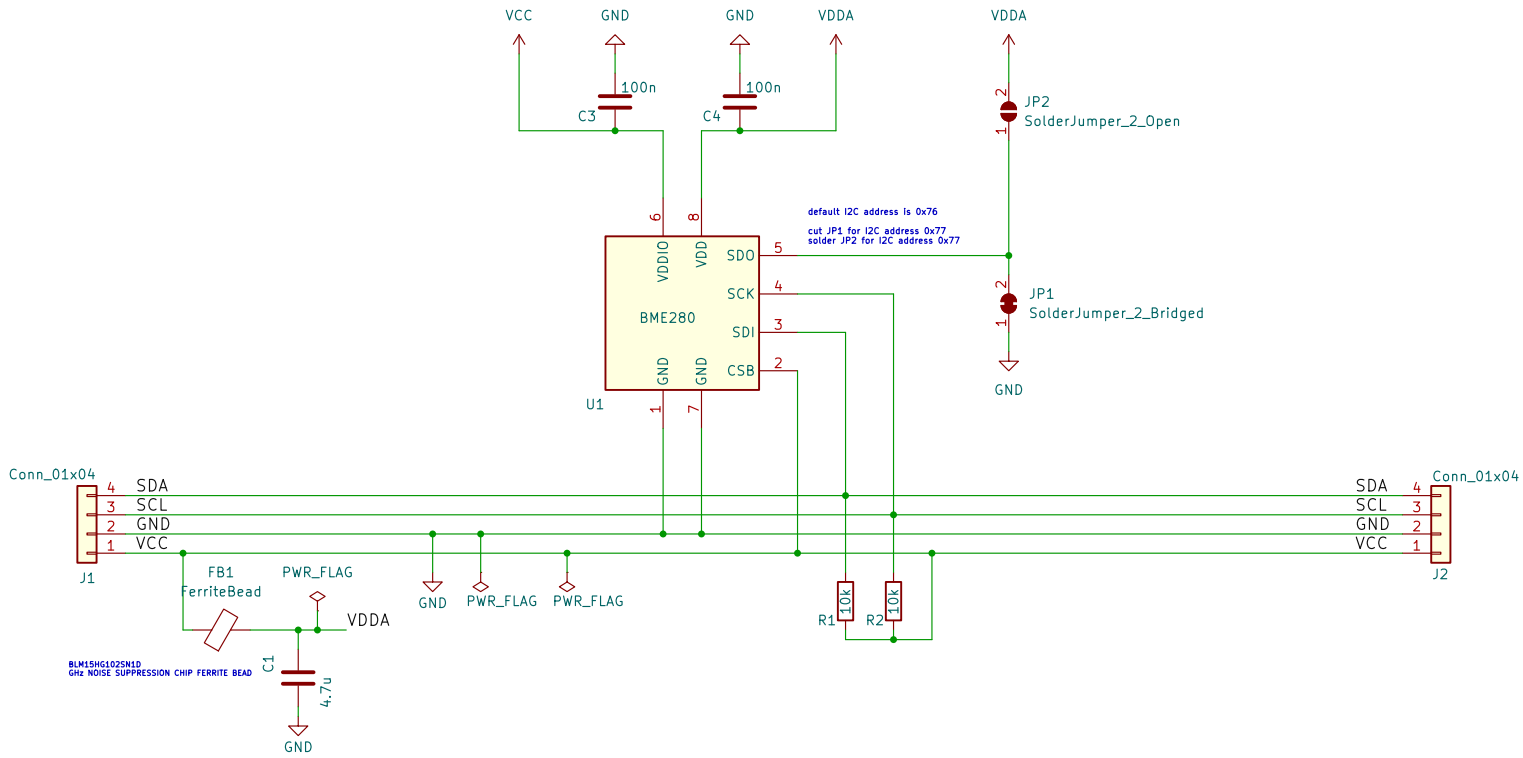

IMPORTANT: max. VCC voltage is 3.3V

default I2C address is 0x76

Creative Commons License, non-commercial
fitting to HB-UNI-SEN-BATT_ATMega1284P_E07-868MS10_FUEL4EP
FUEL4EP

Sheet: /
File: I2C_Module_BME280_FUEL4EP.kicad_sch

Title: I2C_Module_BME280_FUEL4EP

Size: A4	Date: 2024-09-30	**Rev: 1.5**
KiCad E.D.A. 8.0.5		Id: 1/1