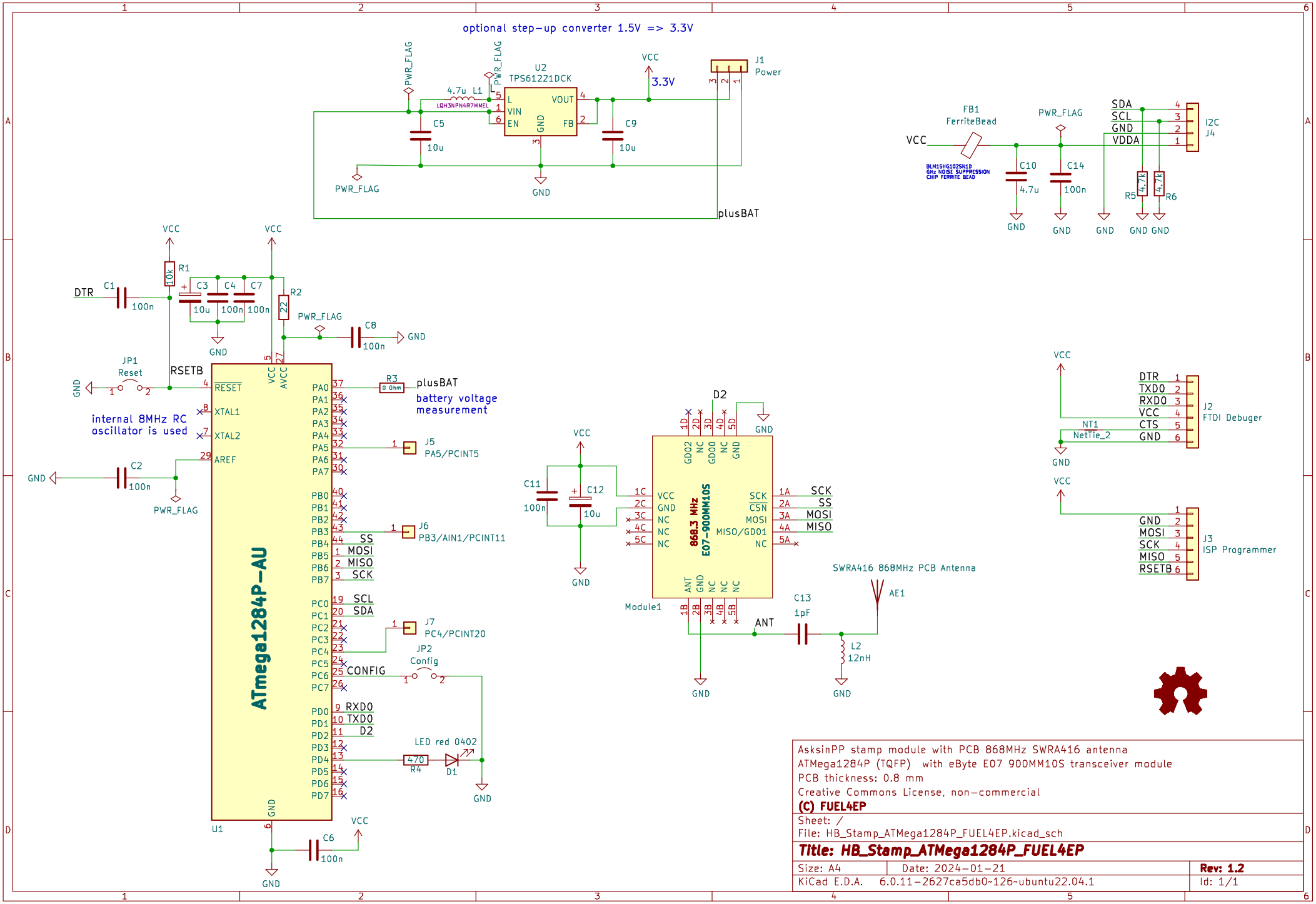

AsksinPP stamp module with PCB 868MHz SWRA416 antenna
ATMega1284P (TQFP) with eByte E07 900MM10S transceiver module
PCB thickness: 0.8 mm
Creative Commons License, non-commercial
(C) FUEL4EP

Sheet: /
File: HB_Stamp_ATMega1284P_FUEL4EP.kicad_sch

Title: HB_Stamp_ATMega1284P_FUEL4EP

Size: A4	Date: 2024-01-21	**Rev: 1.2**
KiCad E.D.A. 6.0.11-2627ca5db0~126~ubuntu22.04.1		Id: 1/1