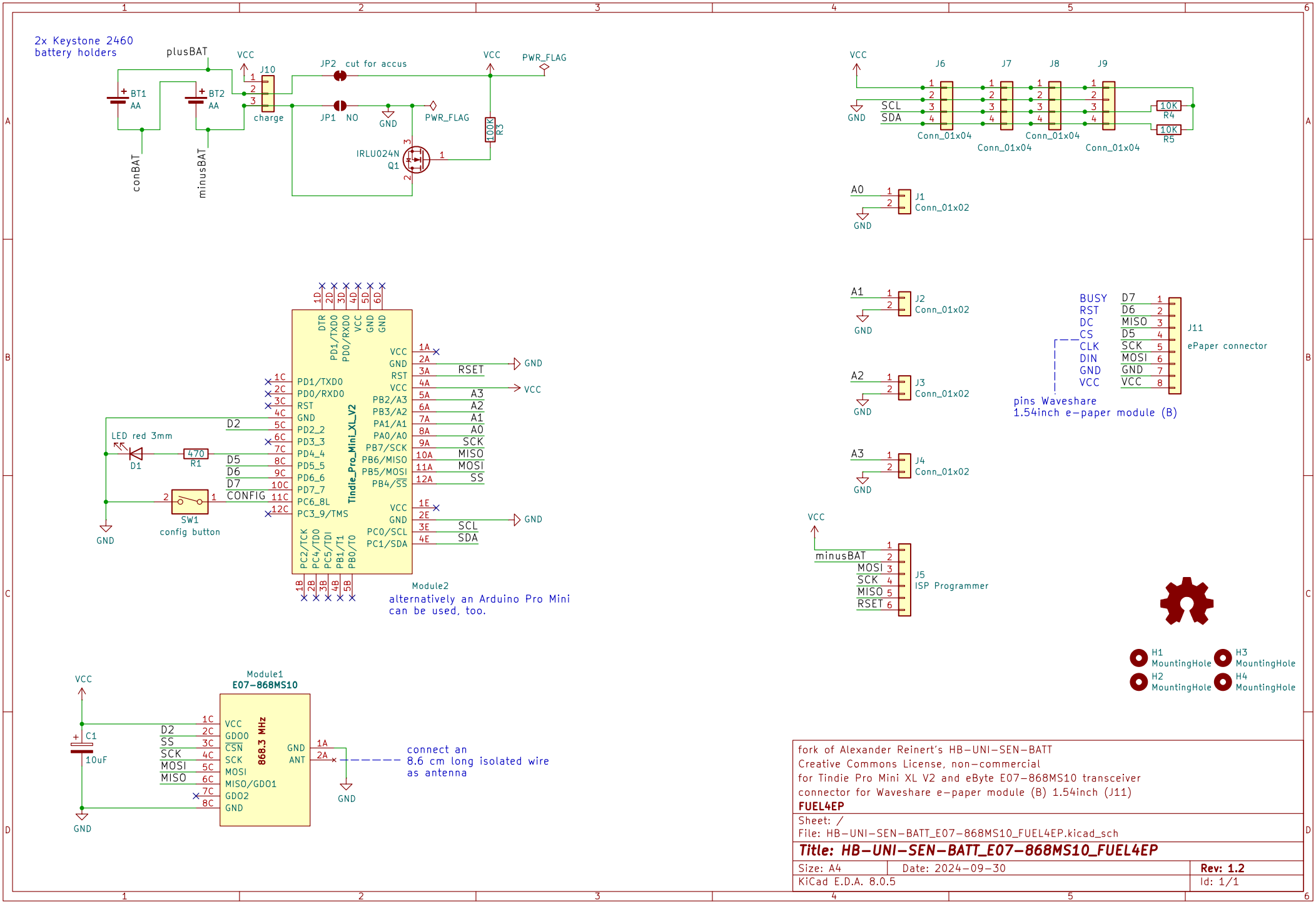

fork of Alexander Reinert's HB-UNI-SEN-BATT
Creative Commons License, non-commercial
for Tindie Pro Mini XL V2 and eByte E07-868MS10 transceiver
connector for Waveshare e-paper module (B) 1.54inch (J11)
FUEL4EP

Sheet: /
File: HB-UNI-SEN-BATT_E07-868MS10_FUEL4EP.kicad_sch

Title: HB-UNI-SEN-BATT_E07-868MS10_FUEL4EP

Size: A4	Date: 2024-09-30	**Rev: 1.2**
KiCad E.D.A. 8.0.5		Id: 1/1