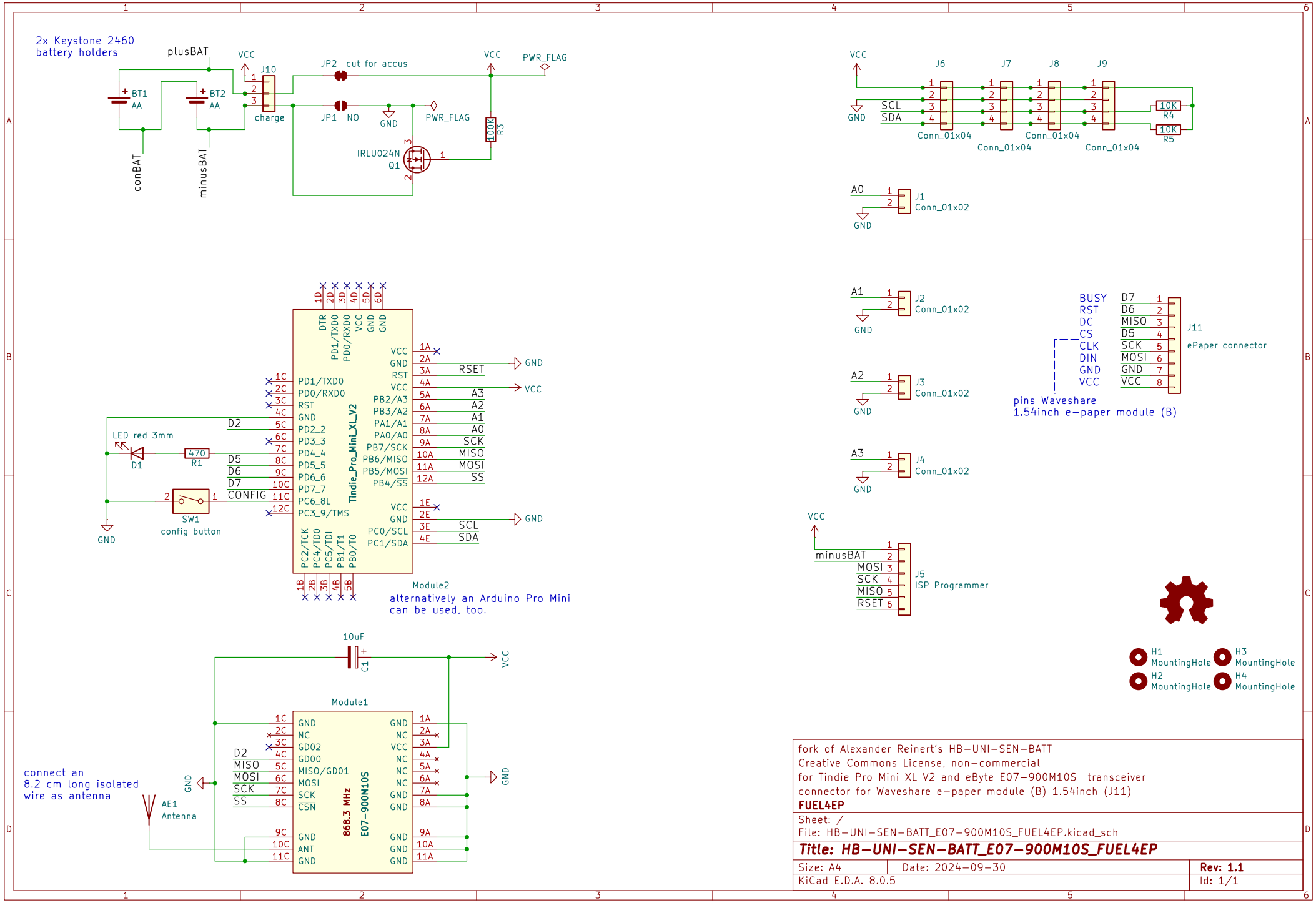


fork of Alexander Reinert's HB-UNI-SEN-BATT
Creative Commons License, non-commercial
for Tindie Pro Mini XL V2 and eByte E07-900M10S transceiver
connector for Waveshare e-paper module (B) 1.54inch (J11)

**FUEL4EP**

Sheet: /
File: HB-UNI-SEN-BATT_E07-900M10S_FUEL4EP.kicad_sch

**Title: HB-UNI-SEN-BATT_E07-900M10S_FUEL4EP**

| | | |
|---|---|---|
| Size: A4 | Date: 2024-09-30 | **Rev: 1.1** |
| KiCad E.D.A. 8.0.5 | | Id: 1/1 |