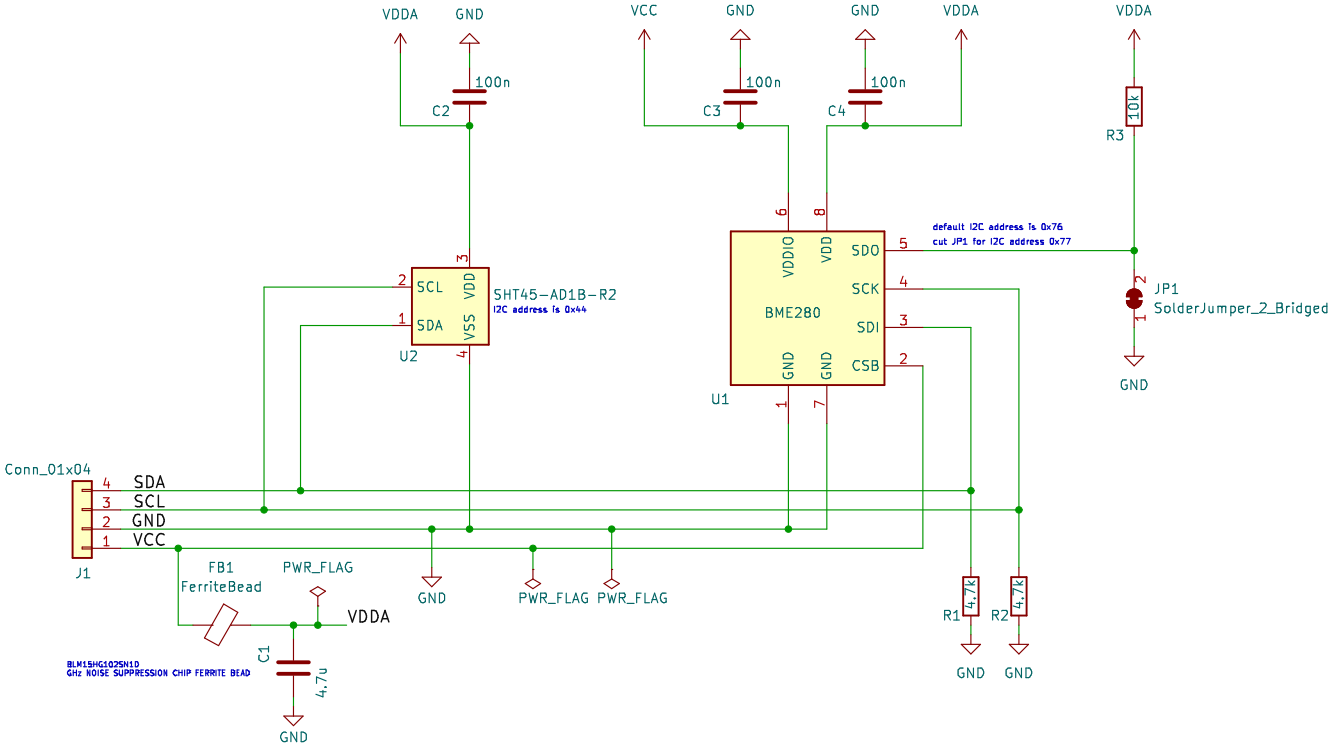

IMPORTANT: max. VCC voltage is 3.3V

default I2C address of the BME280 sensor is 0x76
I2C address of the SHT45 sensor is 0x44

Creative Commons License, non-commercial
fitting to HB_Stamp_ATMega1284P_FUEL4EP
FUEL4EP

Sheet: /
File: I2C_Module_SHT45_BME280_small_FUEL4EP.kicad_sch

Title: I2C_Module_SHT45_BME280_small_FUEL4EP

Size: A4	Date: 2024-01-14	**Rev: 1.1**
KiCad E.D.A. kicad 6.0.11-2627ca5db0~126~ubuntu22.04.1		Id: 1/1