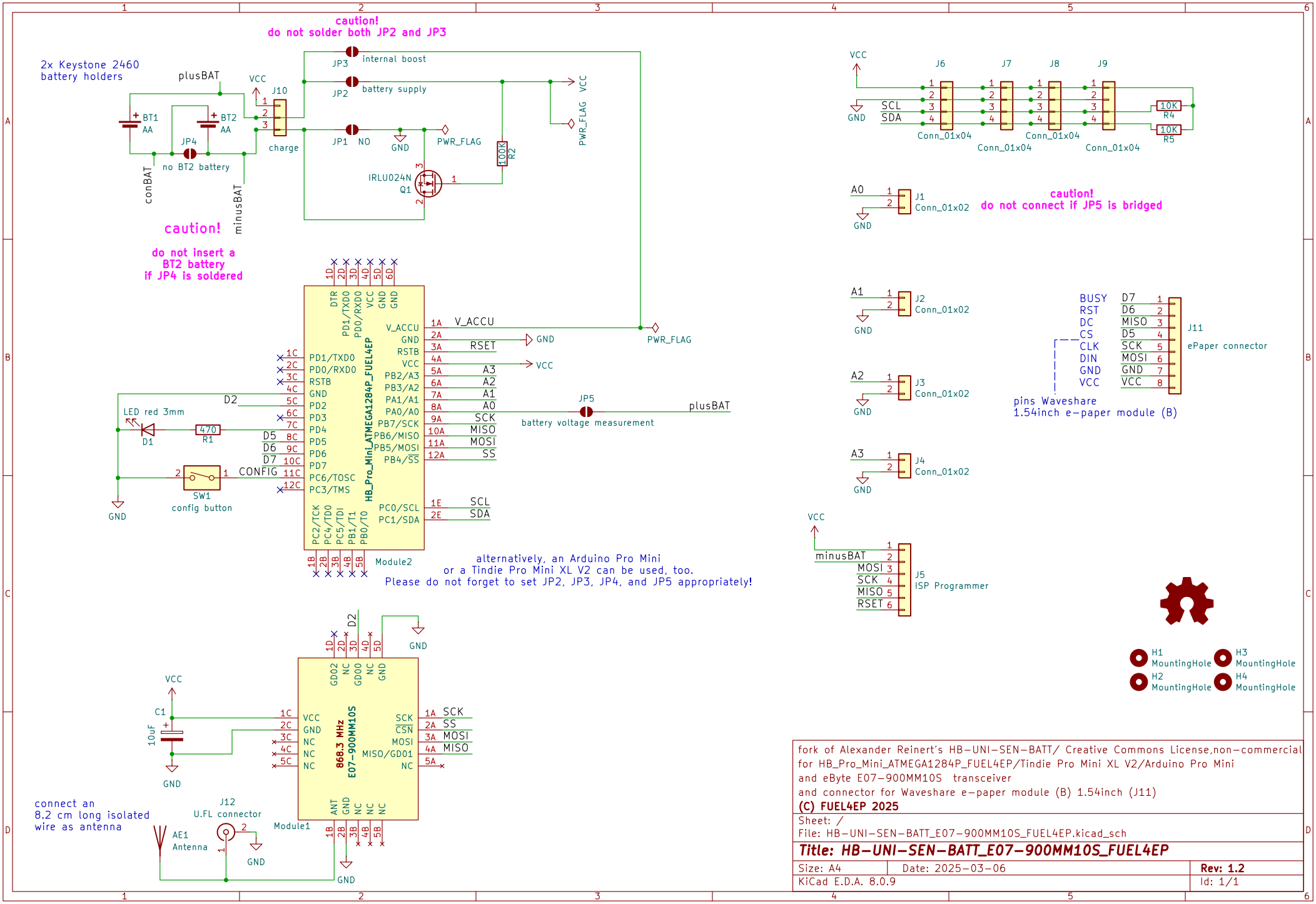
caution!
do not solder both JP2 and JP3
2x Keystone 2460
battery holders
plusBAT
VCC
J10
BT1
AA
BT2
AA
JP4
no BT2 battery
conBAT
minusBAT
charge
JP3
internal boost
JP2
battery supply
JP1
NO
GND
PWR_FLAG
IRLU024N
Q1
100K
R2
caution!
do not insert a
BT2 battery
if JP4 is soldered
HB_Pro_Mini_ATMEGA1284P_FUEL4EP
V_ACCU
RSET
A3
A2
A1
A0
SCK
MISO
MOSI
SS
SCL
SDA
D2
LED red 3mm
D1
470
R1
D5
D6
D7
CONFIG
SW1
config button
JP5
battery voltage measurement
Module2
alternatively, an Arduino Pro Mini
or a Tindie Pro Mini XL V2 can be used, too.
Please do not forget to set JP2, JP3, JP4, and JP5 appropriately!
J6
J7
J8
J9
Conn_01x04
10K
R4
R5
J1
Conn_01x02
caution!
do not connect if JP5 is bridged
J2
J3
J4
J11
ePaper connector
BUSY
RST
DC
CS
CLK
DIN
GND
VCC
D7
D6
MISO
D5
SCK
MOSI
pins Waveshare
1.54inch e-paper module (B)
J5
ISP Programmer
minusBAT
MOSI
SCK
MISO
RSET
H1
MountingHole
H2
MountingHole
H3
MountingHole
H4
MountingHole
C1
10uF
E07-900MM10S
868.3 MHz
Module1
connect an
8.2 cm long isolated
wire as antenna
J12
U.FL connector
AE1
Antenna
fork of Alexander Reinert's HB-UNI-SEN-BATT/ Creative Commons License,non-commercial
for HB_Pro_Mini_ATMEGA1284P_FUEL4EP/Tindie Pro Mini XL V2/Arduino Pro Mini
and eByte E07-900MM10S transceiver
and connector for Waveshare e-paper module (B) 1.54inch (J11)
(C) FUEL4EP 2025
Sheet: /
File: HB-UNI-SEN-BATT_E07-900MM10S_FUEL4EP.kicad_sch
Title: HB-UNI-SEN-BATT_E07-900MM10S_FUEL4EP
Size: A4
Date: 2025-03-06
Rev: 1.2
KiCad E.D.A. 8.0.9
Id: 1/1