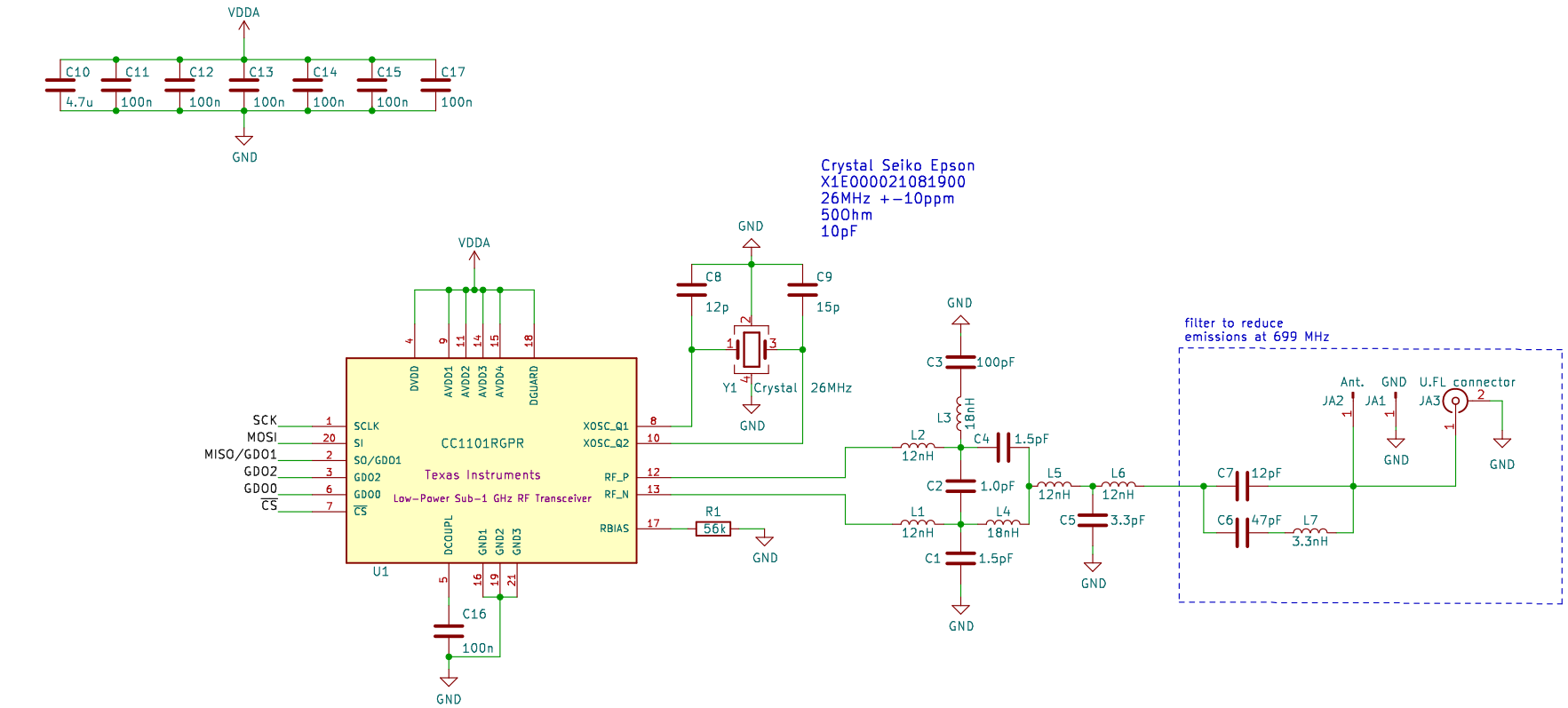

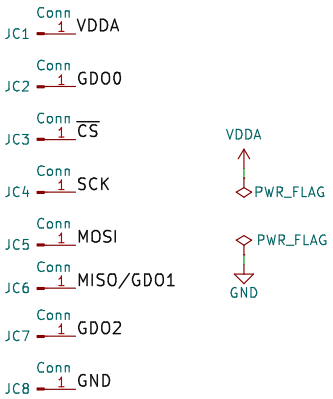

Dimensioning and selection according
TI SWRS076B – 11-07-22-013 – APRIL 2009 – REVISED APRIL 2010
868MHz page 22

868.3 MHz CC1101 RF tranceiver module prepared for JLCPCB assembly
for AsksinPP DIY devices
Creative Commons License, non-commercial
fork of Jérômes CC1101_module https://github.com/jp112sdl/CC1101_Module
(C) FUEL4EP 2023

Sheet: /
File: CC1101_868MHz_UFL_RF_Modul_FUEL4EP.kicad_sch

Title: CC1101_868MHz_UFL_RF_Modul_FUEL4EP

Size: A4	Date: 2023-08-27	**Rev: 1.0**
KiCad E.D.A. kicad 6.0.11-2627ca5db0~126~ubuntu22.04.1		Id: 1/1