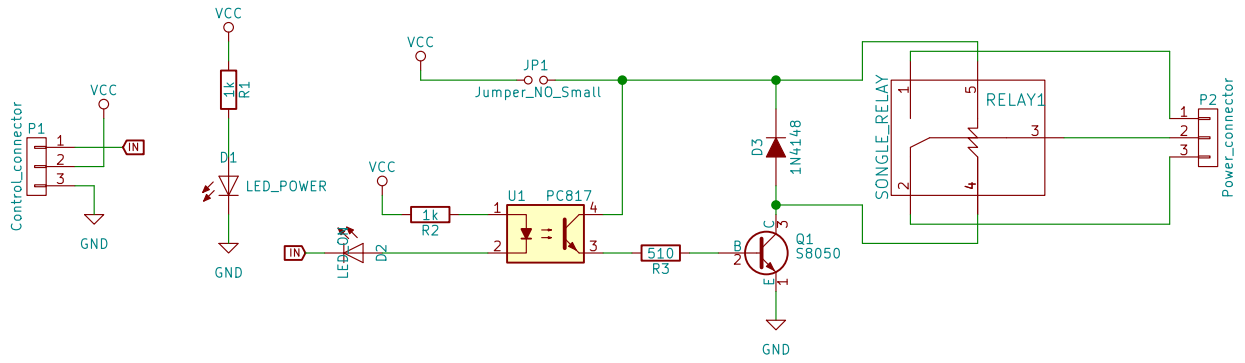

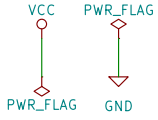

David matias
Frizzy Electronics

Sheet: /
File: RelayModule.sch

Title: RelayModule

Size: A4	Date: 2017-05-29	**Rev: v1.0**
KiCad E.D.A. kicad 4.0.7-e2-637658ubuntu16.04.1		Id: 1/1