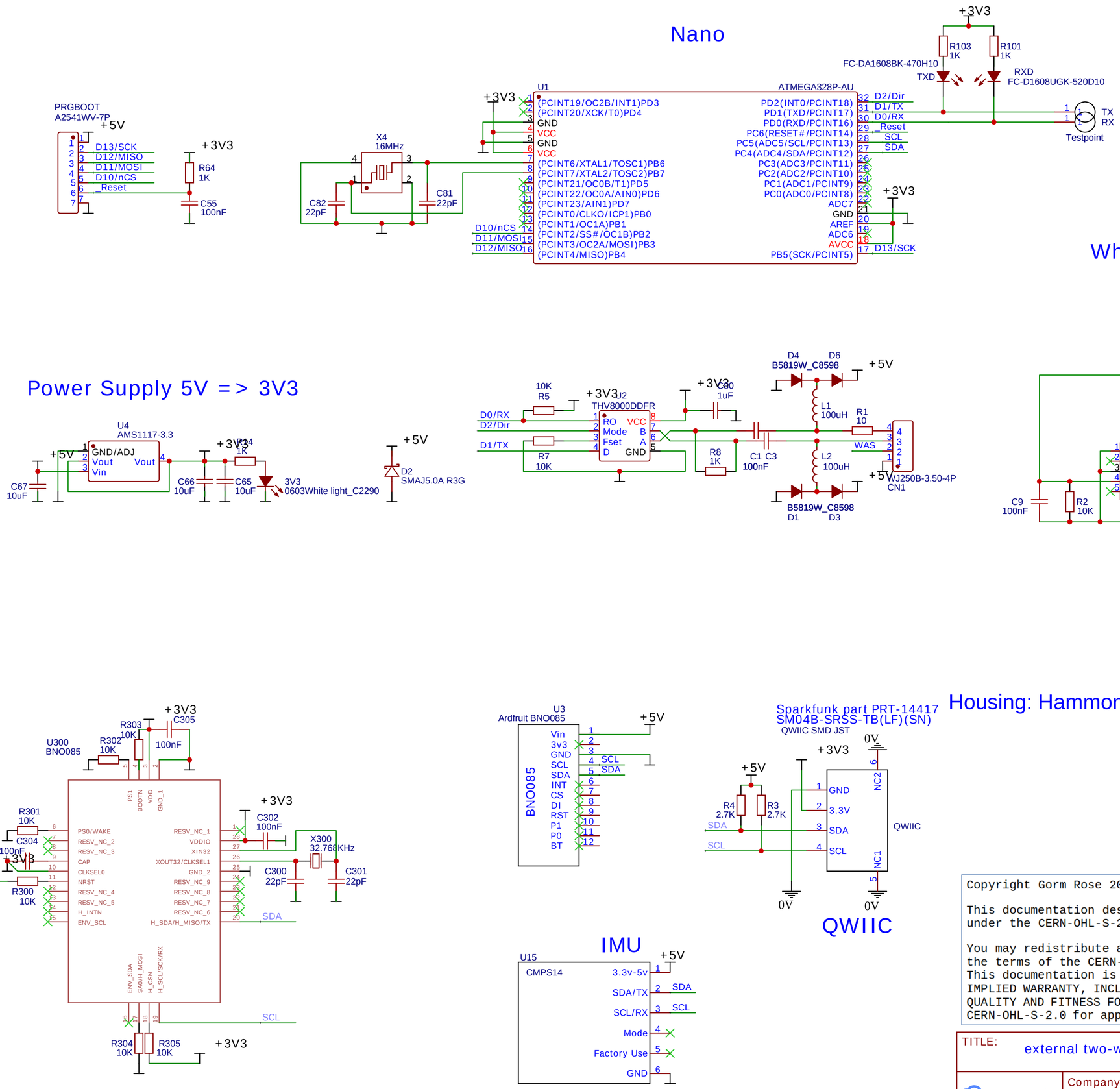

Housing: Hammond Manufacturing 1590LLBFL

Copyright Gorm Rose 2022.

This documentation describes Open Hardware and is licensed under the CERN-OHL-S-2.0.

You may redistribute and modify this documentation under the terms of the CERN-OHL-S-2.0. (http://ohwr.org/cernohl). This documentation is distributed WITHOUT ANY EXPRESS OR IMPLIED WARRANTY, INCLUDING OF MERCHANTABILITY, SATISFACTORY QUALITY AND FITNESS FOR A PARTICULAR PURPOSE. Please see the CERN-OHL-S-2.0 for applicable conditions.

TITLE: external two-wire IMU		REV: 1.0
EasyEDA	Company https://github.com/gormr	Sheet: 2/8
	Date: 2022-01-11 Drawn By: GoRoNb	