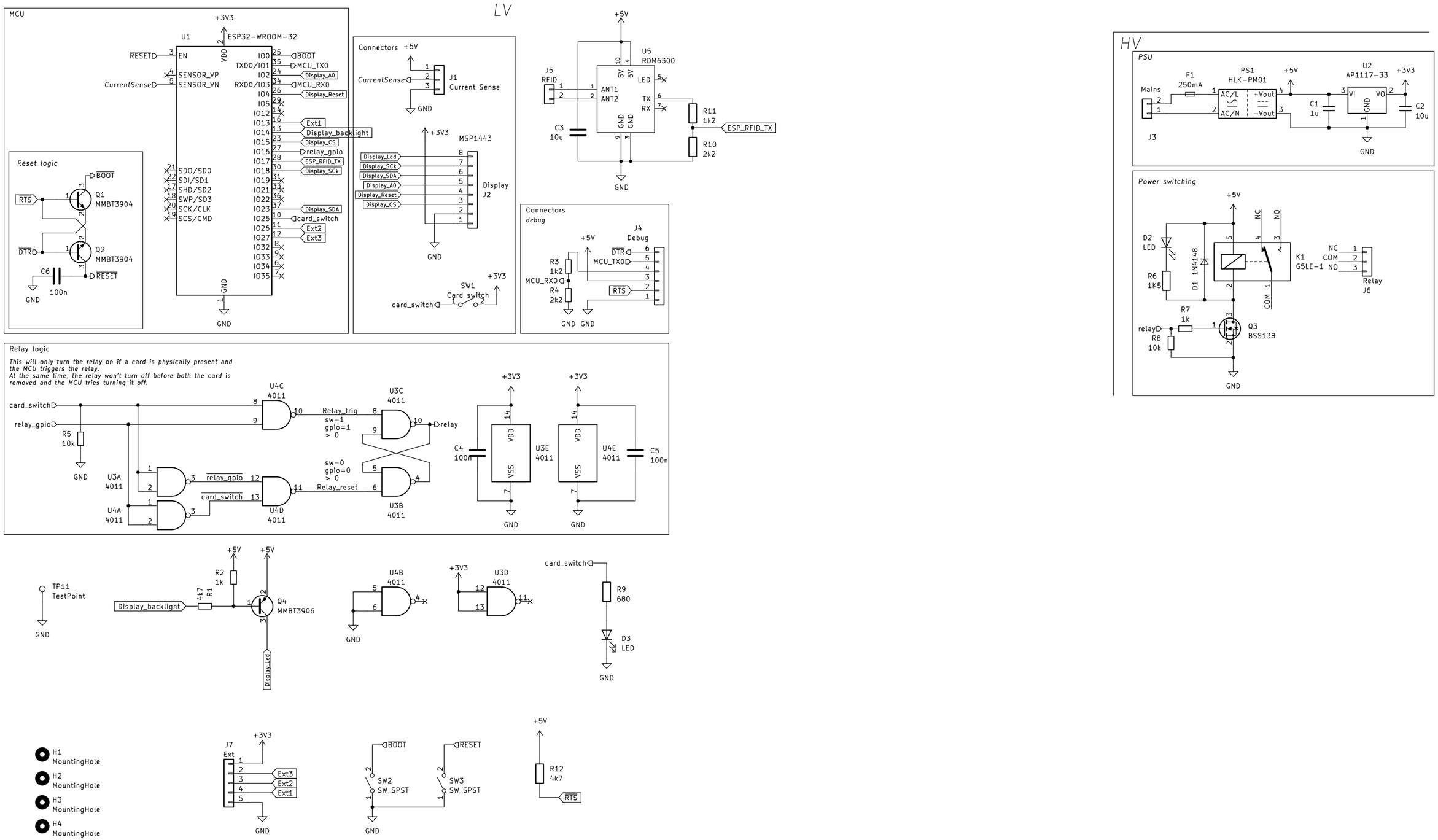
LV
MCU
U1
ESP32-WROOM-32
+3V3
RESET
CurrentSense
EN
SENSOR_VP
SENSOR_VN
VDD
IO0
TXD0/IO1
IO2
RXD0/IO3
IO4
IO5
IO12
IO13
IO14
IO15
IO16
IO17
IO18
IO19
IO21
IO22
IO23
IO25
IO26
IO27
IO32
IO33
IO34
IO35
SDO/SD0
SDI/SD1
SHD/SD2
SWP/SD3
SCK/CLK
SCS/CMD
GND
BOOT
MCU_TX0
Display_A0
MCU_RX0
Display_Reset
Ext1
Display_backlight
Display_CS
relay_gpio
ESP_RFID_TX
Display_SCk
Display_SDA
card_switch
Ext2
Ext3
Reset logic
Q1
MMBT3904
Q2
MMBT3904
RTS
DTR
C6
100n
Connectors
J1
Current Sense
MSP1443
Display
J2
Display_Led
Display_SCk
Display_SDA
Display_A0
Display_Reset
Display_CS
SW1
Card switch
card_switch
U5
RDM6300
J5
RFID
ANT1
ANT2
LED
TX
RX
C3
10u
R11
1k2
R10
2k2
Connectors
debug
J4
Debug
R3
1k2
R4
2k2
MCU_RX0
Relay logic
This will only turn the relay on if a card is physically present and the MCU triggers the relay.
At the same time, the relay won't turn off before both the card is removed and the MCU tries turning it off.
R5
10k
U4C
4011
U3C
4011
Relay_trig
sw=1
gpio=1
> 0
sw=0
gpio=0
> 0
Relay_reset
relay
U3A
4011
U4A
4011
U4D
4011
U3B
4011
C4
100n
U3E
4011
U4E
4011
C5
100n
TP11
TestPoint
R2
1k
R1
4k7
Q4
MMBT3906
U4B
4011
U3D
4011
R9
680
D3
LED
H1
MountingHole
H2
MountingHole
H3
MountingHole
H4
MountingHole
J7
Ext
SW2
SW_SPST
SW3
SW_SPST
R12
4k7
HV
PSU
Mains
F1
250mA
PS1
HLK-PM01
AC/L
AC/N
+Vout
-Vout
C1
1u
U2
AP1117-33
VI
VO
C2
10u
J3
Power switching
D2
LED
R6
1K5
D1 1N4148
K1
G5LE-1
NC
COM
NO
Relay
J6
R7
1k
R8
10k
Q3
BSS138
relay