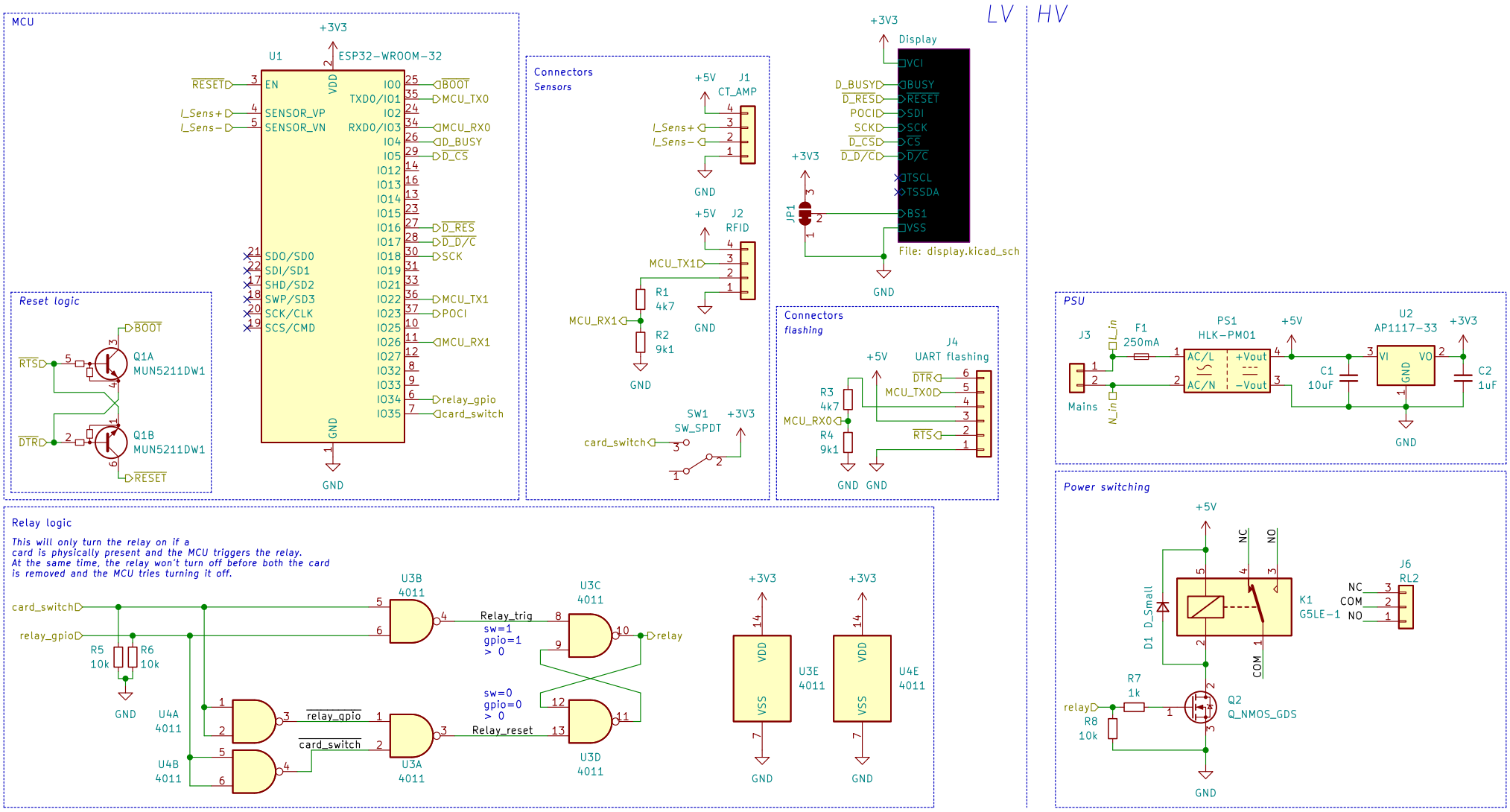

Sheet: /
File: bigbro_box.kicad_sch

Title:

Size: A4	Date:	Rev:
KiCad E.D.A. kicad (5.99.0-12701-gd39127bbcb)		Id: 1/2

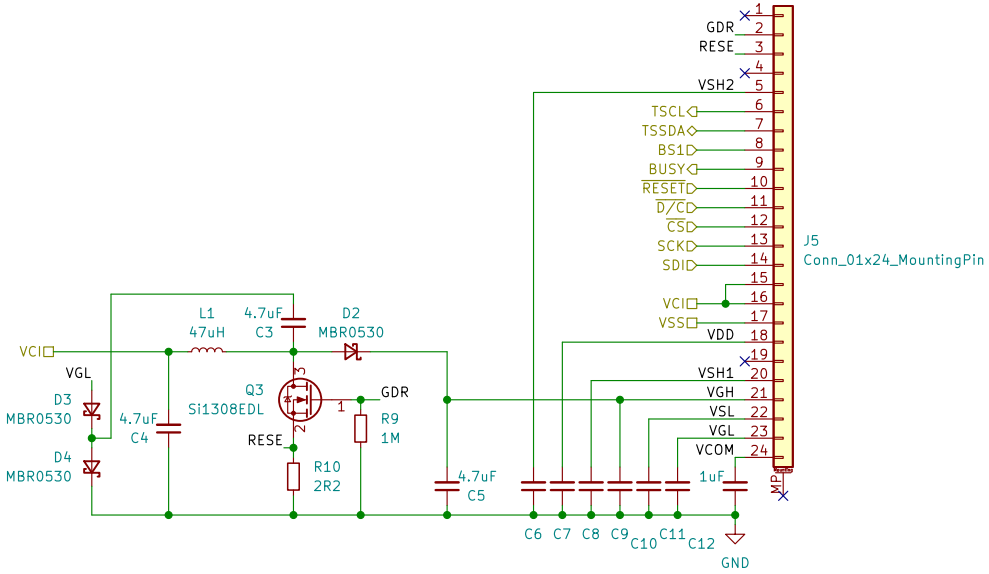

Sheet: /Display/
File: display.kicad_sch

Title:

Size: A4	Date:	Rev:
KiCad E.D.A. kicad (5.99.0-12701-gd39127bbcb)		Id: 2/2