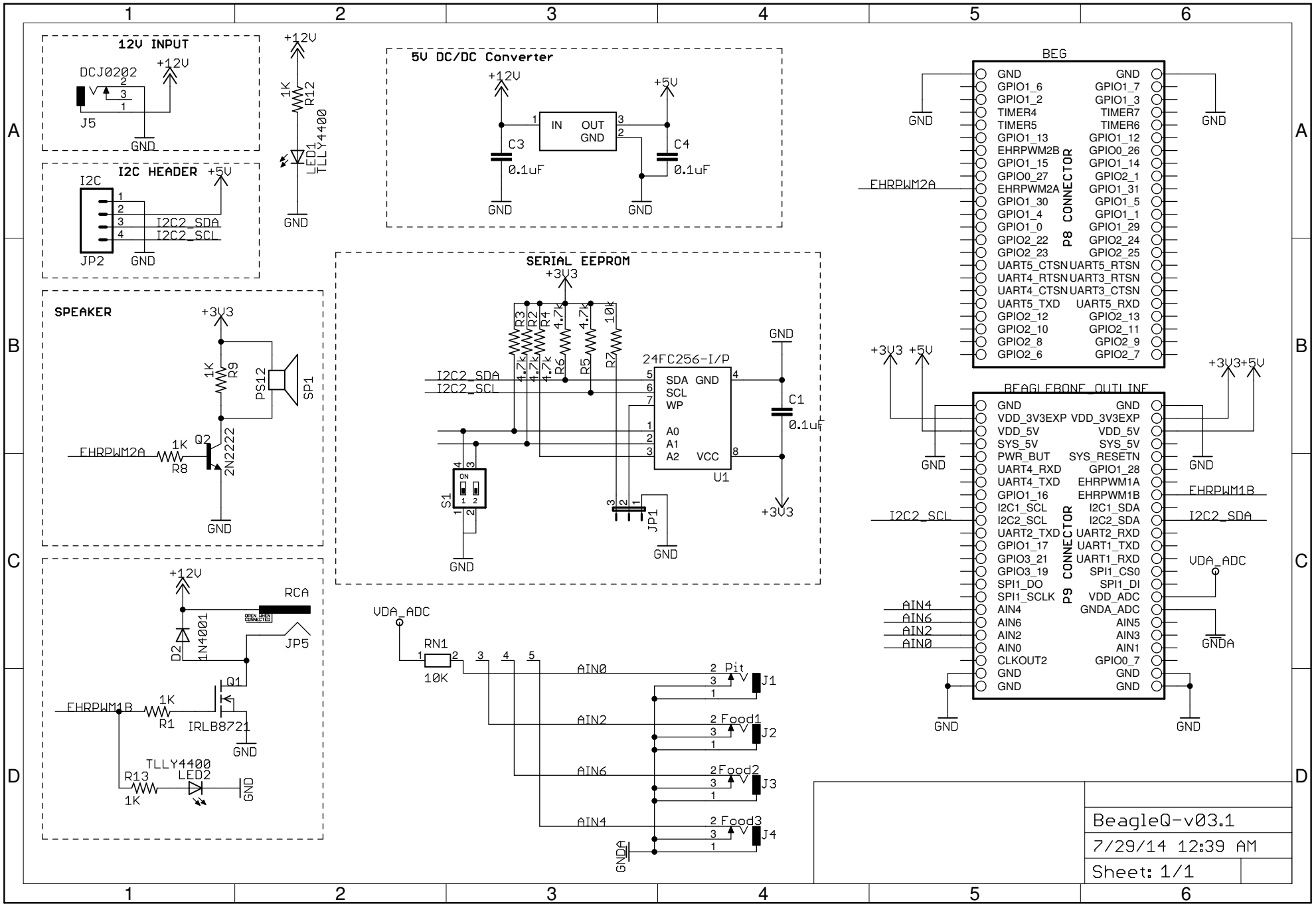
12V INPUT
DCJ0202
J5
+12V
GND
I2C HEADER
I2C
JP2
+5V
I2C2_SDA
I2C2_SCL
SPEAKER
+3V3
1K
R9
PS12
SP1
EHRPWM2A
R8
Q2
2N2222
+12V
RCA
D2
1N4001
JP5
Q1
EHRPWM1B
R1
IRLB8721
R13
TLLY4400
LED2
LED1
R12
5V DC/DC Converter
IN
OUT
C3
0.1uF
C4
SERIAL EEPROM
24FC256-I/P
SDA
SCL
WP
A0
A1
A2
VCC
U1
C1
S1
JP1
VDA_ADC
RN1
10K
AIN0
AIN2
AIN6
AIN4
J1
J2
J3
J4
Pit
Food1
Food2
Food3
GNDA
BEG
P8 CONNECTOR
BEAGLEBONE_OUTLINE
P9 CONNECTOR
GND
GPIO1_6
GPIO1_2
TIMER4
TIMER5
GPIO1_13
EHRPWM2B
GPIO1_15
GPIO0_27
EHRPWM2A
GPIO1_30
GPIO1_4
GPIO1_0
GPIO2_22
GPIO2_23
UART5_CTSN
UART4_RTSN
UART4_CTSN
UART5_TXD
GPIO2_12
GPIO2_10
GPIO2_8
GPIO2_6
GPIO1_7
GPIO1_3
TIMER7
TIMER6
GPIO1_12
GPIO0_26
GPIO1_14
GPIO2_1
GPIO1_31
GPIO1_5
GPIO1_1
GPIO1_29
GPIO2_24
GPIO2_25
UART5_RTSN
UART3_RTSN
UART3_CTSN
UART5_RXD
GPIO2_13
GPIO2_11
GPIO2_9
GPIO2_7
VDD_3V3EXP
VDD_5V
SYS_5V
PWR_BUT
UART4_RXD
UART4_TXD
GPIO1_16
I2C1_SCL
I2C2_SCL
UART2_TXD
GPIO1_17
GPIO3_21
GPIO3_19
SPI1_DO
SPI1_SCLK
CLKOUT2
SYS_RESETN
GPIO1_28
EHRPWM1A
EHRPWM1B
I2C1_SDA
I2C2_SDA
UART2_RXD
UART1_TXD
UART1_RXD
SPI1_CS0
SPI1_DI
VDD_ADC
GNDA_ADC
AIN5
AIN3
AIN1
GPIO0_7
BeagleQ-v03.1
7/29/14 12:39 AM
Sheet: 1/1