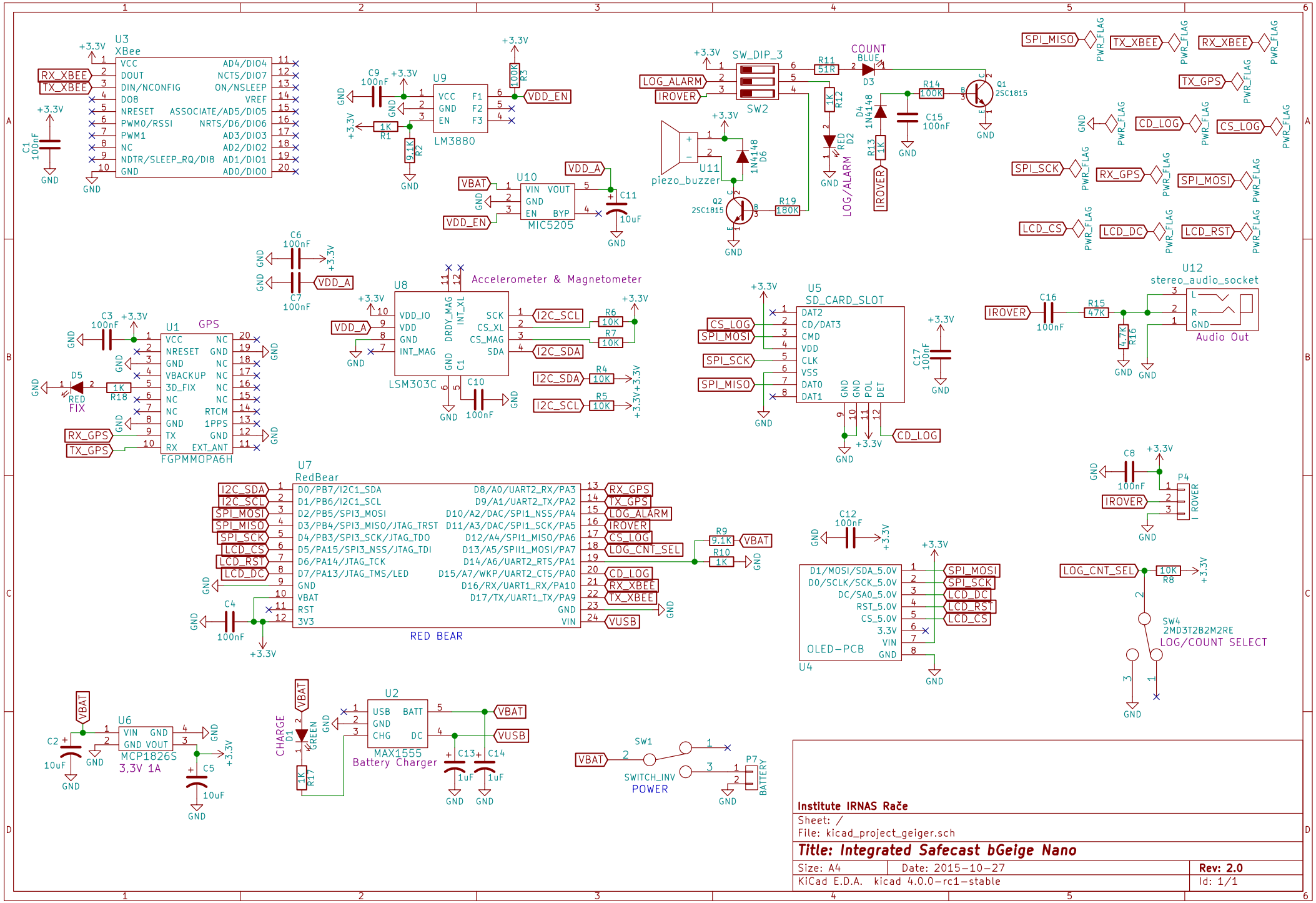

Institute IRNAS Rače

Sheet: /

File: kicad_project_geiger.sch

Title: Integrated Safecast bGeige Nano

Size: A4	Date: 2015-10-27	**Rev: 2.0**
KiCad E.D.A. kicad 4.0.0-rc1-stable		Id: 1/1