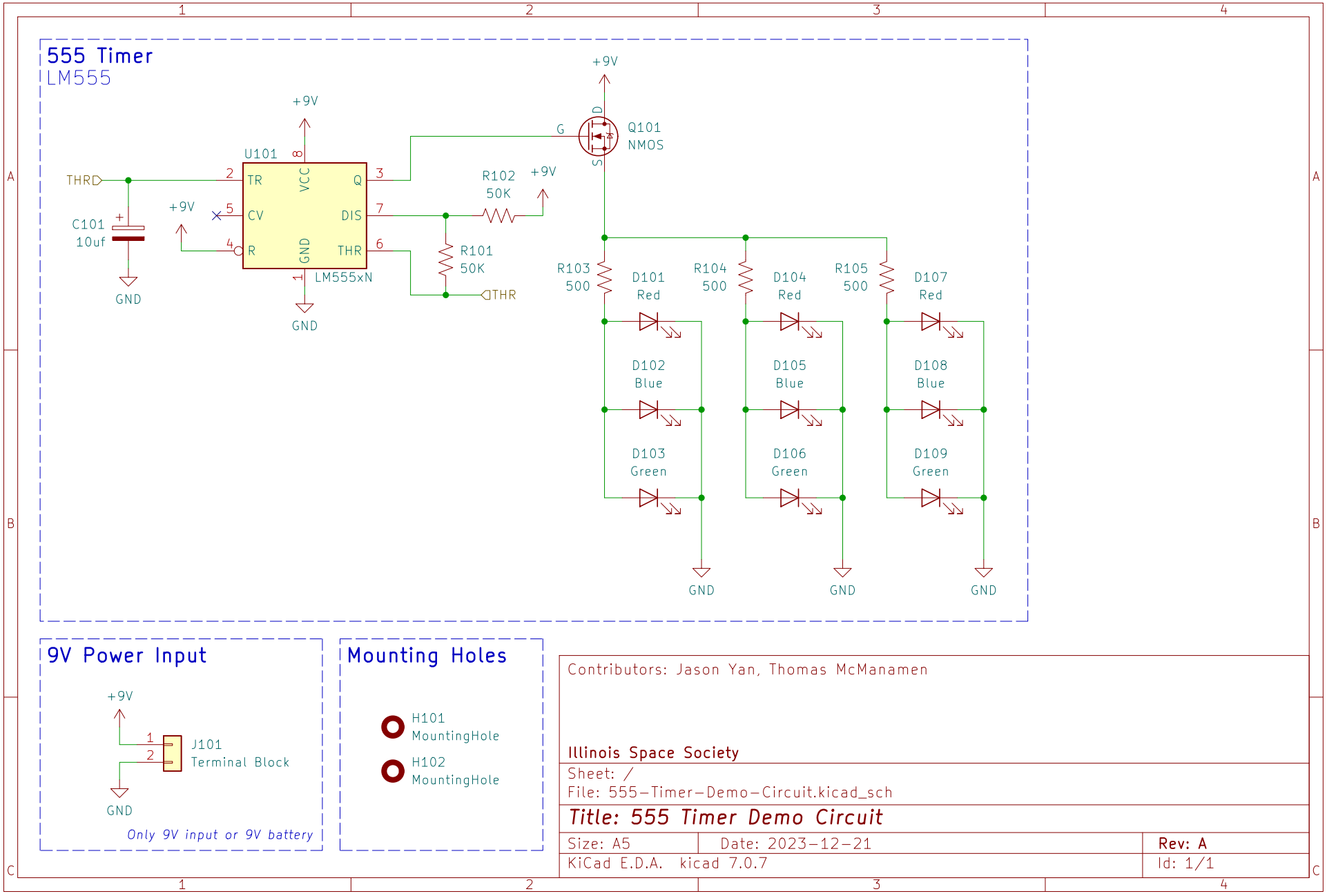
555 Timer
LM555
U101
LM555xN
TR
CV
R
VCC
GND
Q
DIS
THR
+9V
GND
THR
C101
10uf
R101
50K
R102
50K
Q101
NMOS
G
D
S
R103
500
R104
500
R105
500
D101
Red
D102
Blue
D103
Green
D104
Red
D105
Blue
D106
Green
D107
Red
D108
Blue
D109
Green
9V Power Input
J101
Terminal Block
Only 9V input or 9V battery
Mounting Holes
H101
MountingHole
H102
MountingHole
Contributors: Jason Yan, Thomas McManamen
Illinois Space Society
Sheet: /
File: 555-Timer-Demo-Circuit.kicad_sch
Title: 555 Timer Demo Circuit
Size: A5
Date: 2023-12-21
Rev: A
KiCad E.D.A. kicad 7.0.7
Id: 1/1