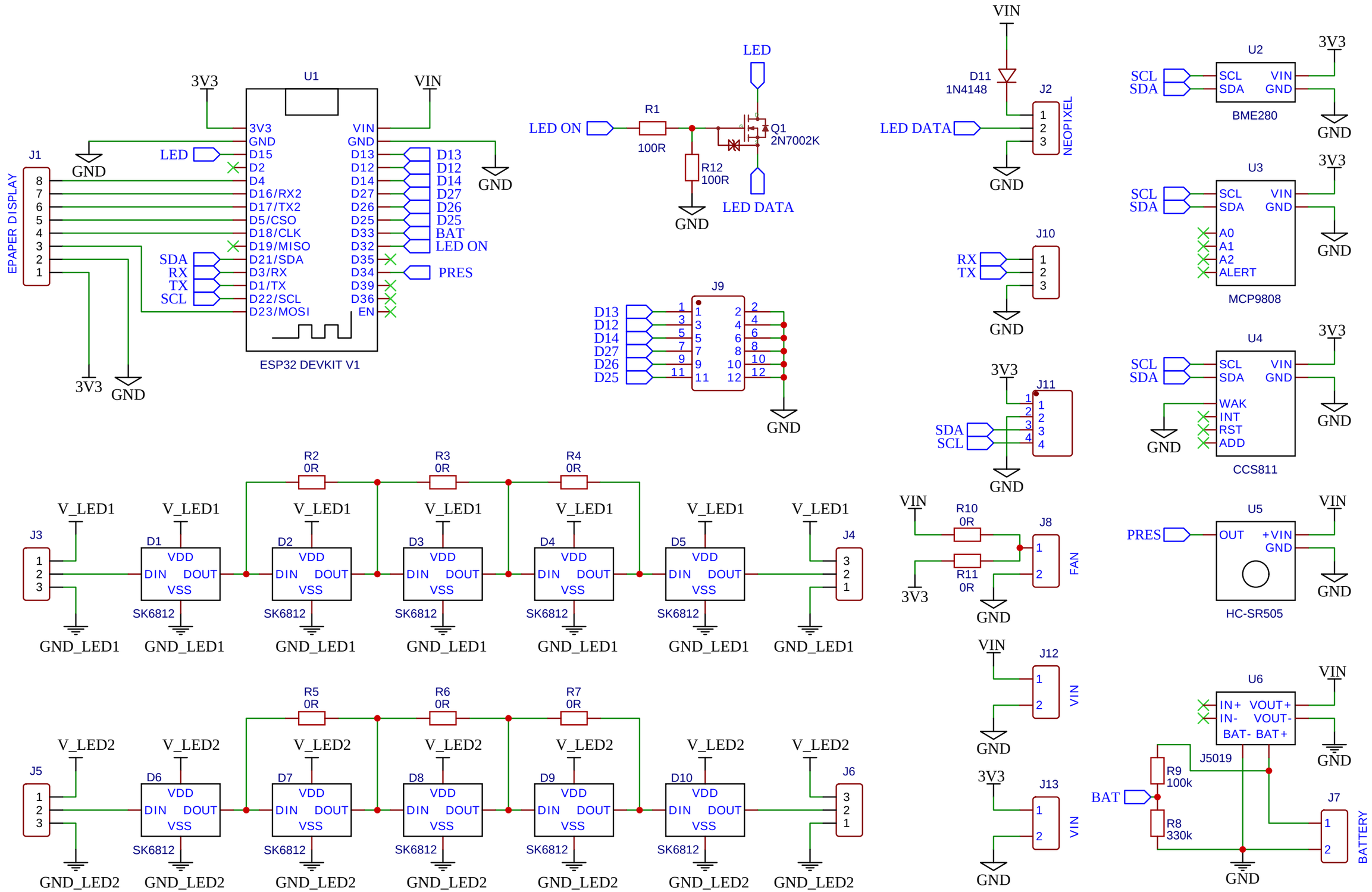

TITLE: Epaper Weather Station Receiver

REV: 1.1

Company: JJ

Sheet: 1/1

Date: 2020-07-11

Drawn By: Jakub Jaszczur