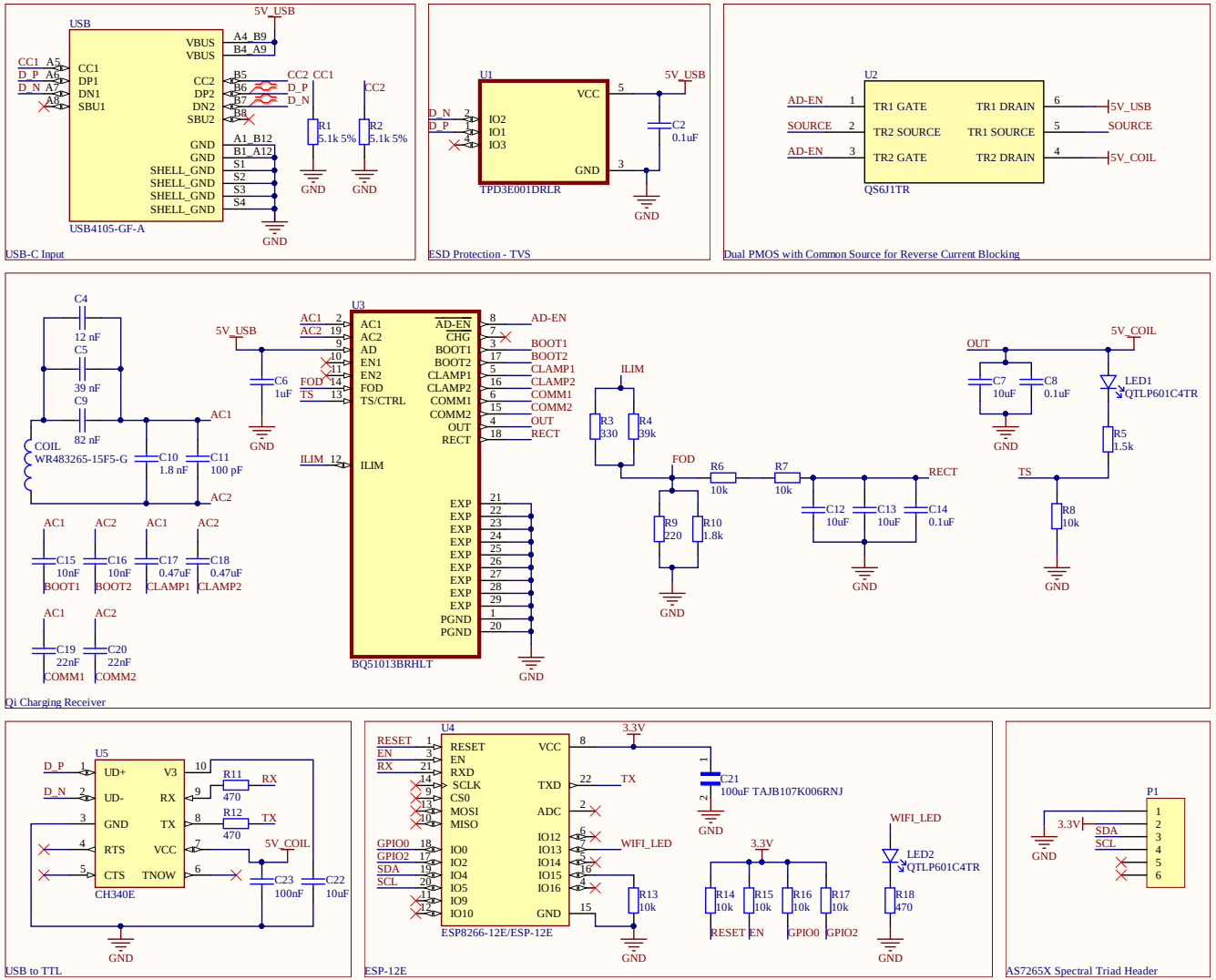

Title		
Spectroscopy Sensor		
Size: A3	Number	Revision: 1.0
Date: 20/07/2021		Sheet 1of 1
File: C:\Users\..\schematic.SchDoc		Drawn By: Kevin Tang