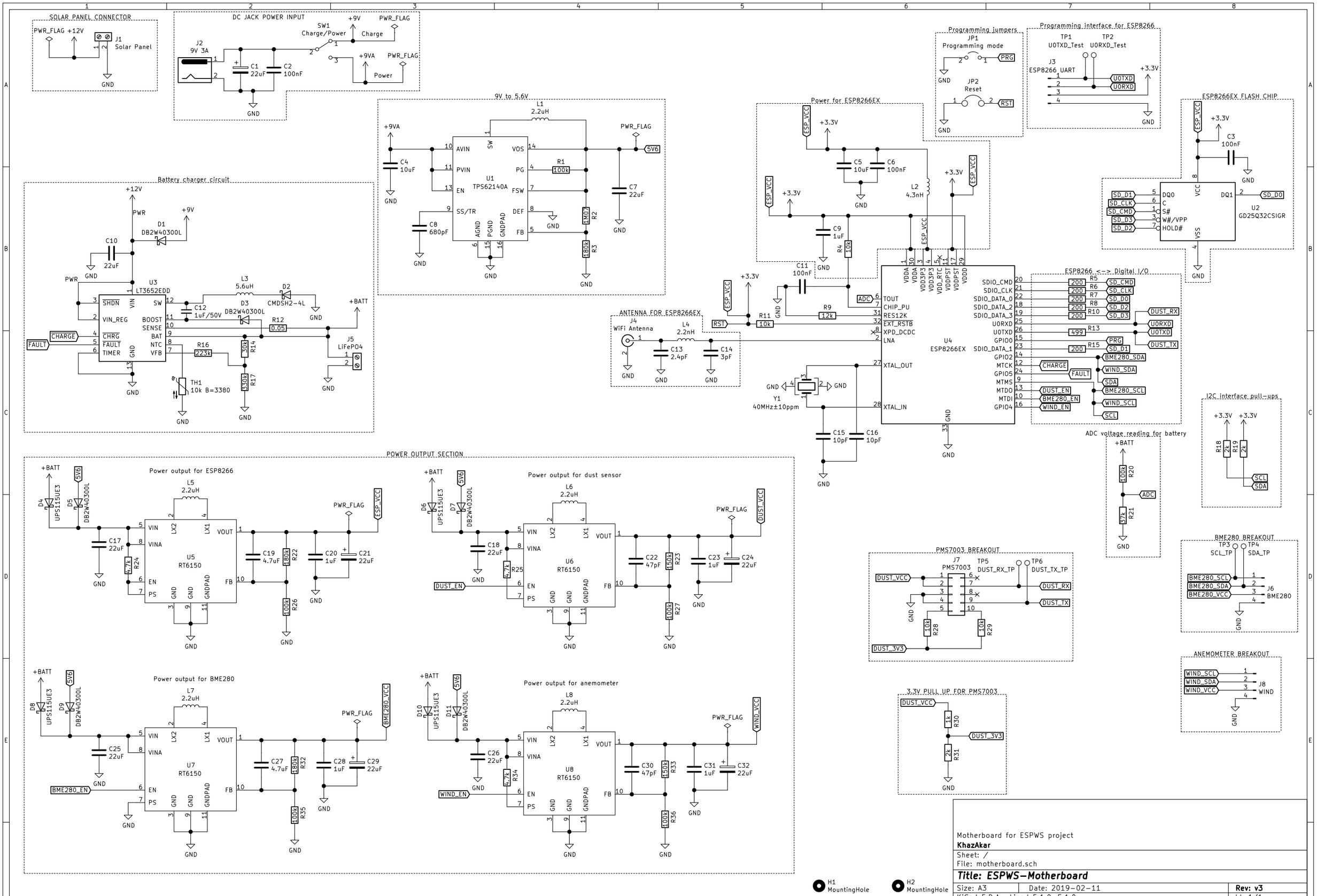

Motherboard for ESPWS project
KhazAkar
Sheet: /
File: motherboard.sch

Title: ESPWS-Motherboard

Size: A3	Date: 2019-02-11	Rev: v3
KiCad E.D.A. kicad 5.1.0-5.1.0		Id: 1/1