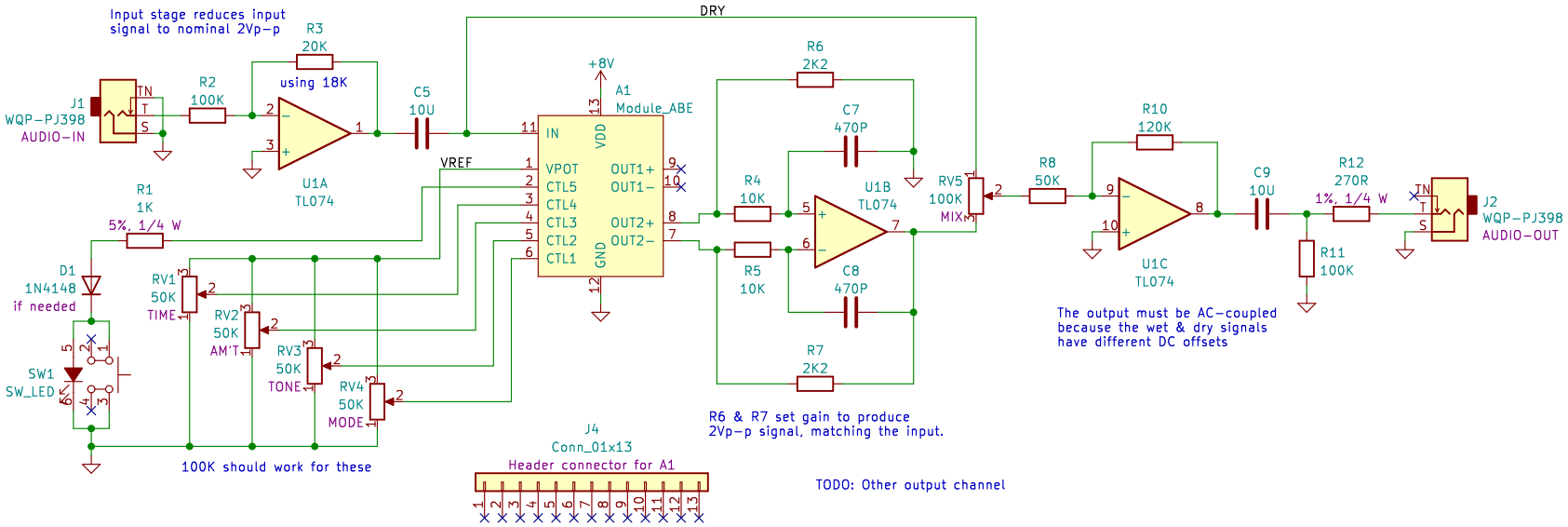


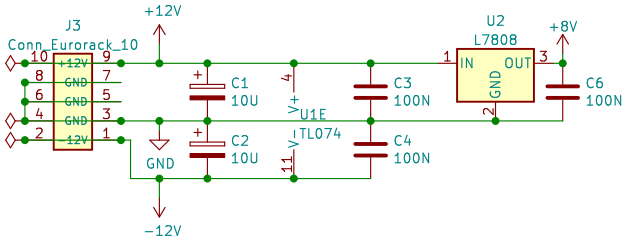


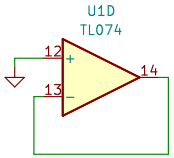


All fixed resistors are 1% tolerance unless otherwise specified.
All eletrolytic capacitors are rated for 25VDC unless otherwise specified.

This work is licensed under the Creative Commons Attribution 4.0 International License.
To view a copy of this license, visit http://creativecommons.org/licenses/by/4.0/
or send a letter to Creative Commons, PO Box 1866, Mountain View, CA 94042, USA.

Eurorack format prototype FX module – 8HP

Copyright © 2022 Len Popp CC BY

**Len Popp**

Sheet: /
File: FX-proto.kicad_sch

**Title: FX Module Prototype**

| | | |
|---|---|---|
| Size: A4 | Date: 2022-08-26 | **Rev: 1.0** |
| KiCad E.D.A. kicad (6.0.6) | | Id: 1/1 |