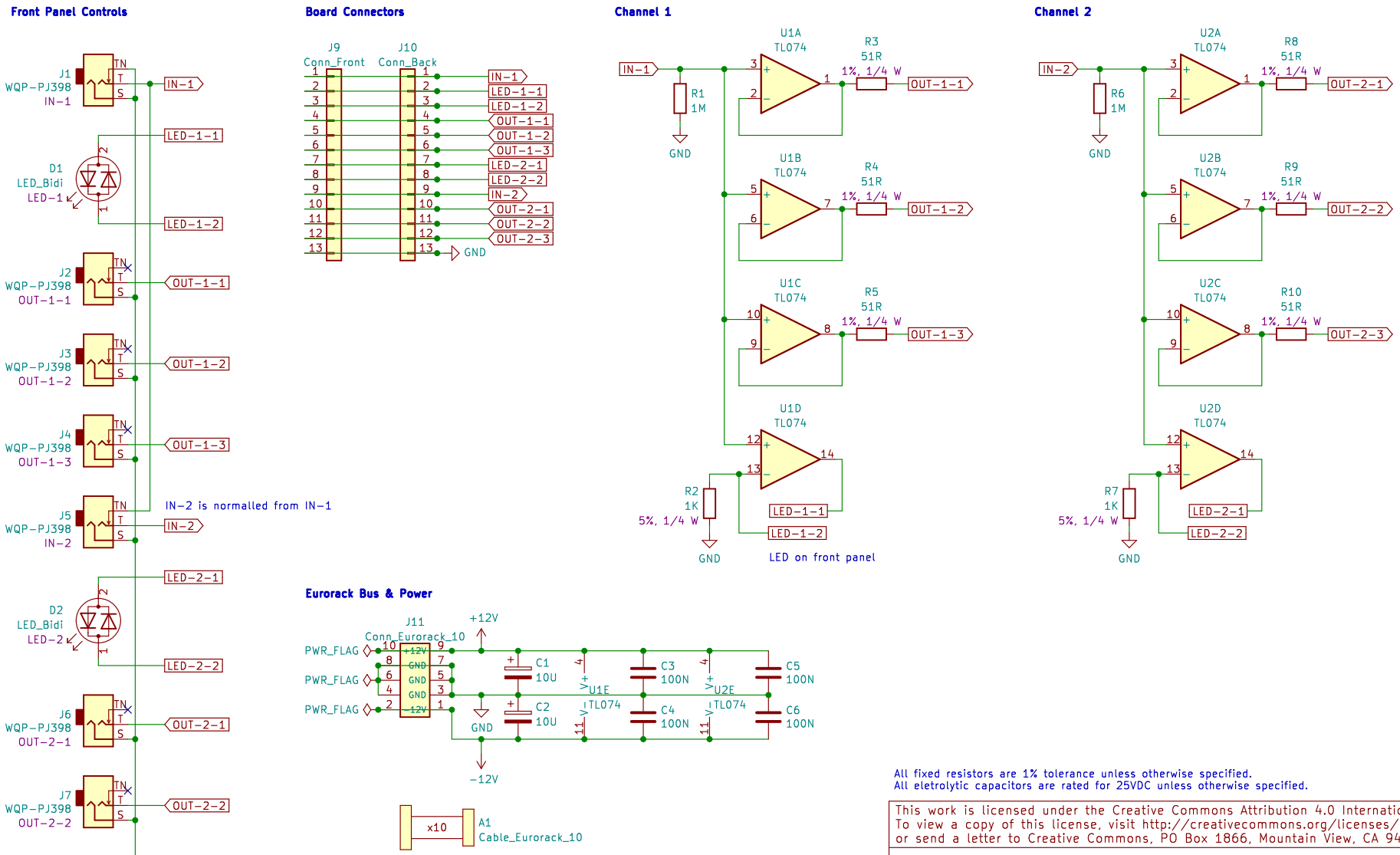

All fixed resistors are 1% tolerance unless otherwise specified.
All eletrolytic capacitors are rated for 25VDC unless otherwise specified.

This work is licensed under the Creative Commons Attribution 4.0 International License.
To view a copy of this license, visit http://creativecommons.org/licenses/by/4.0/
or send a letter to Creative Commons, PO Box 1866, Mountain View, CA 94042, USA.

Eurorackbuffered multiple module – 4HP
Copyright © 2022 Len Popp CC BY
Len Popp

Sheet: /
File: Buff-Mult.kicad_sch

Title: Eurorack Buffered Mult

Size: A4	Date: 2022-06-05	**Rev: 1.0**
KiCad E.D.A. kicad (6.0.6)		Id: 1/1