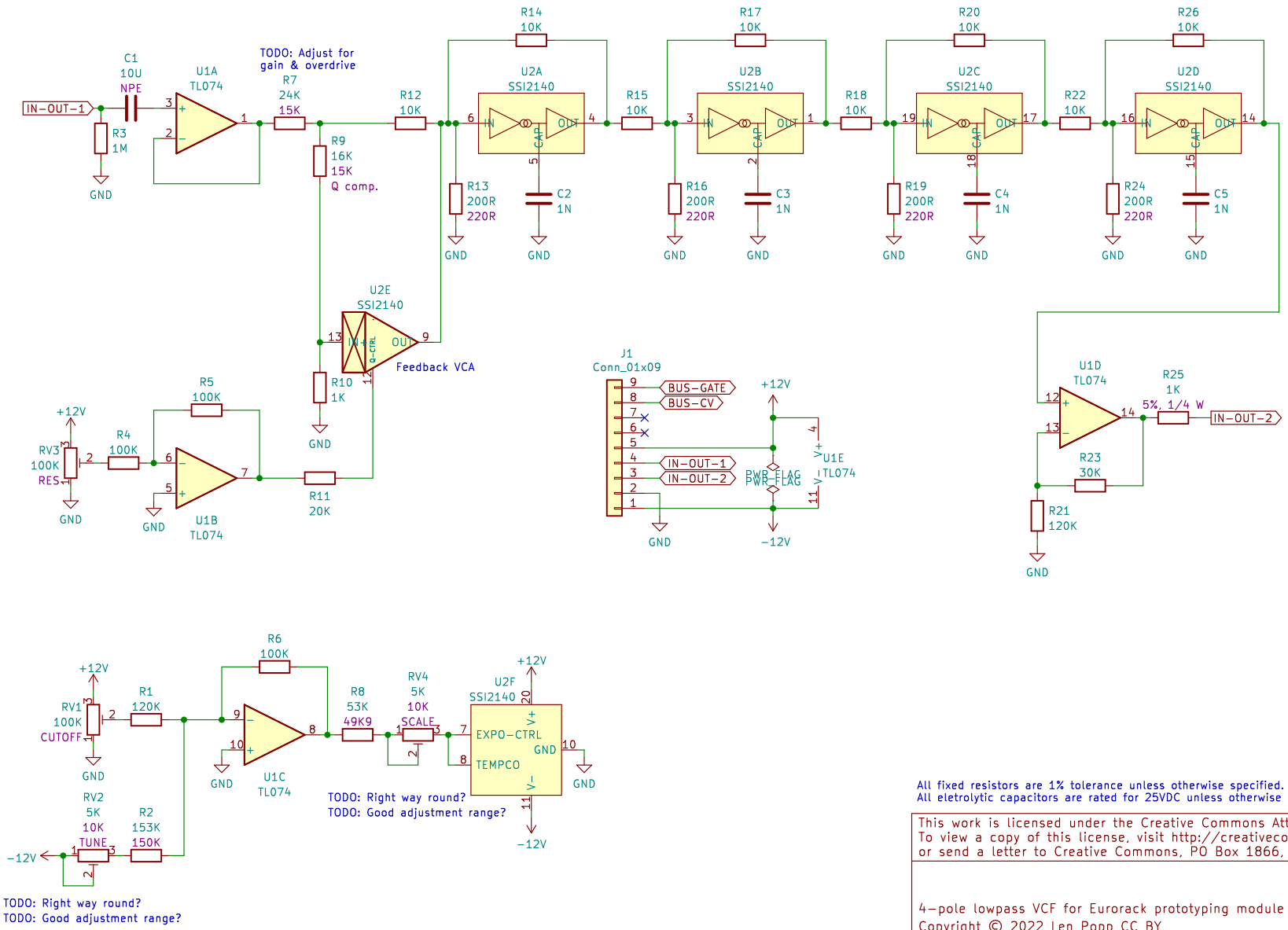

All fixed resistors are 1% tolerance unless otherwise specified.
All eletrolytic capacitors are rated for 25VDC unless otherwise specified.

This work is licensed under the Creative Commons Attribution 4.0 International License.
To view a copy of this license, visit http://creativecommons.org/licenses/by/4.0/
or send a letter to Creative Commons, PO Box 1866, Mountain View, CA 94042, USA.

4-pole lowpass VCF for Eurorack prototyping module

Copyright © 2022 Len Popp CC BY

Len Popp

Sheet: /
File: prototype.kicad_sch

Title: VCF-4P Prototype

Size: A4	Date: 2022-03-27	**Rev: 1.0**
KiCad E.D.A. kicad (6.0.4)		Id: 1/1