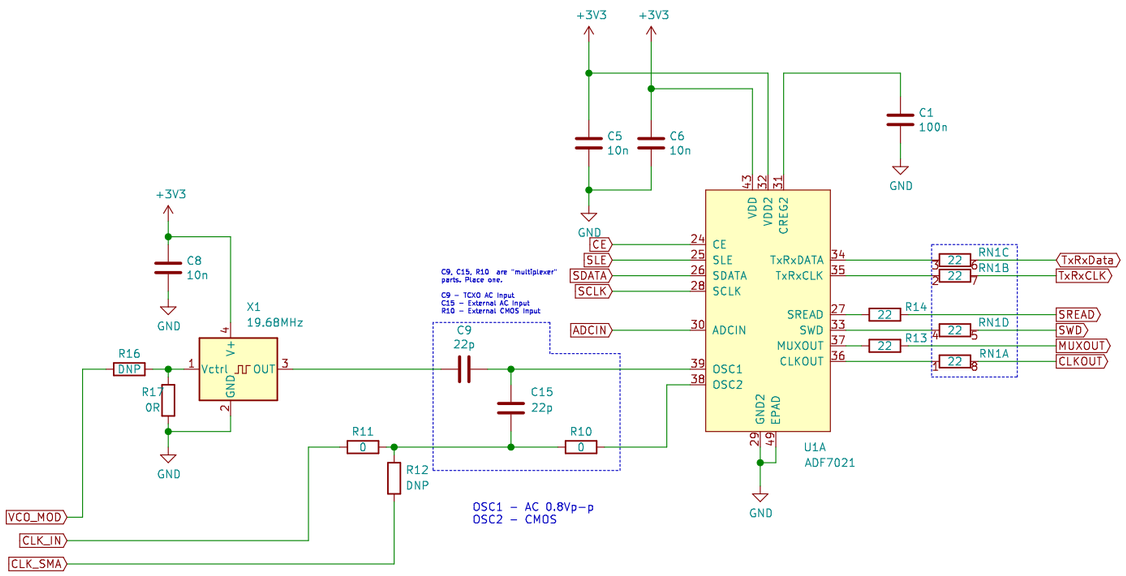

Digital Section

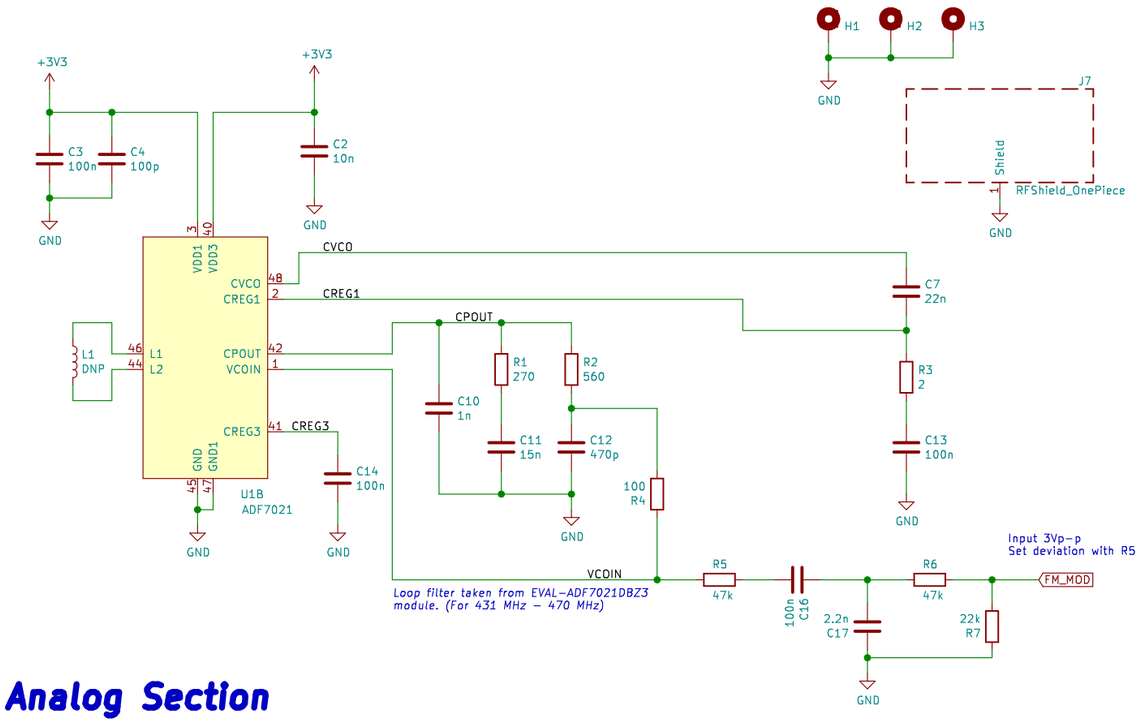

Analog Section

RF Section

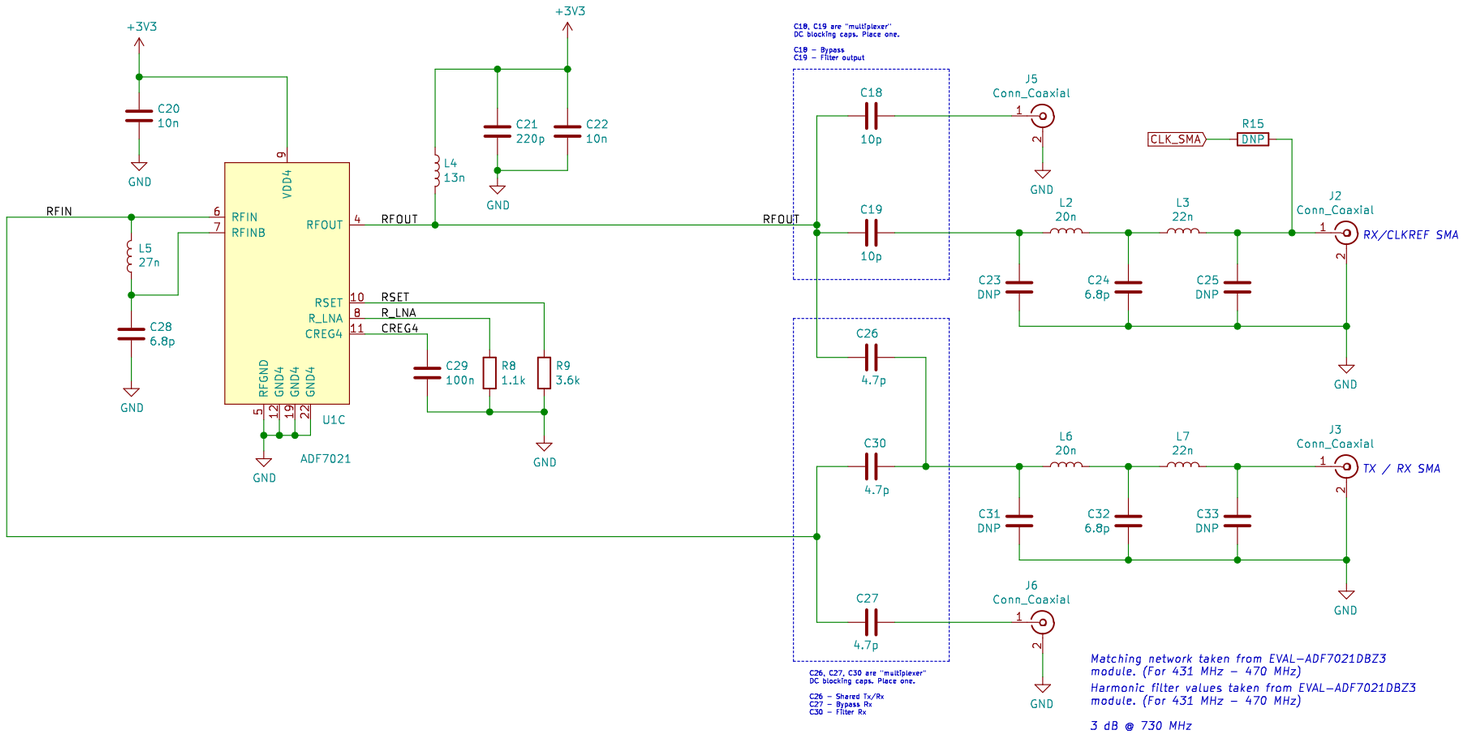

I/O Section

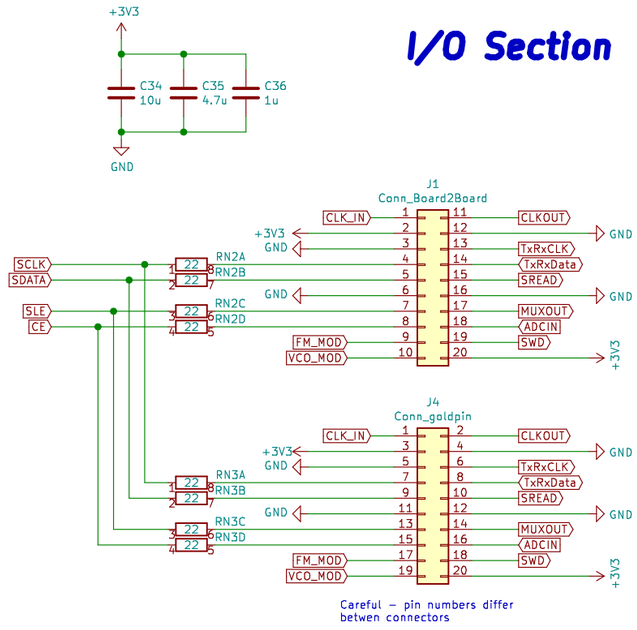

Sheet: /		
File: adf7021_module.sch		
Title:		
Size: A3	Date:	Rev:
KiCad E.D.A. kicad 5.1.8		Id: 1/1