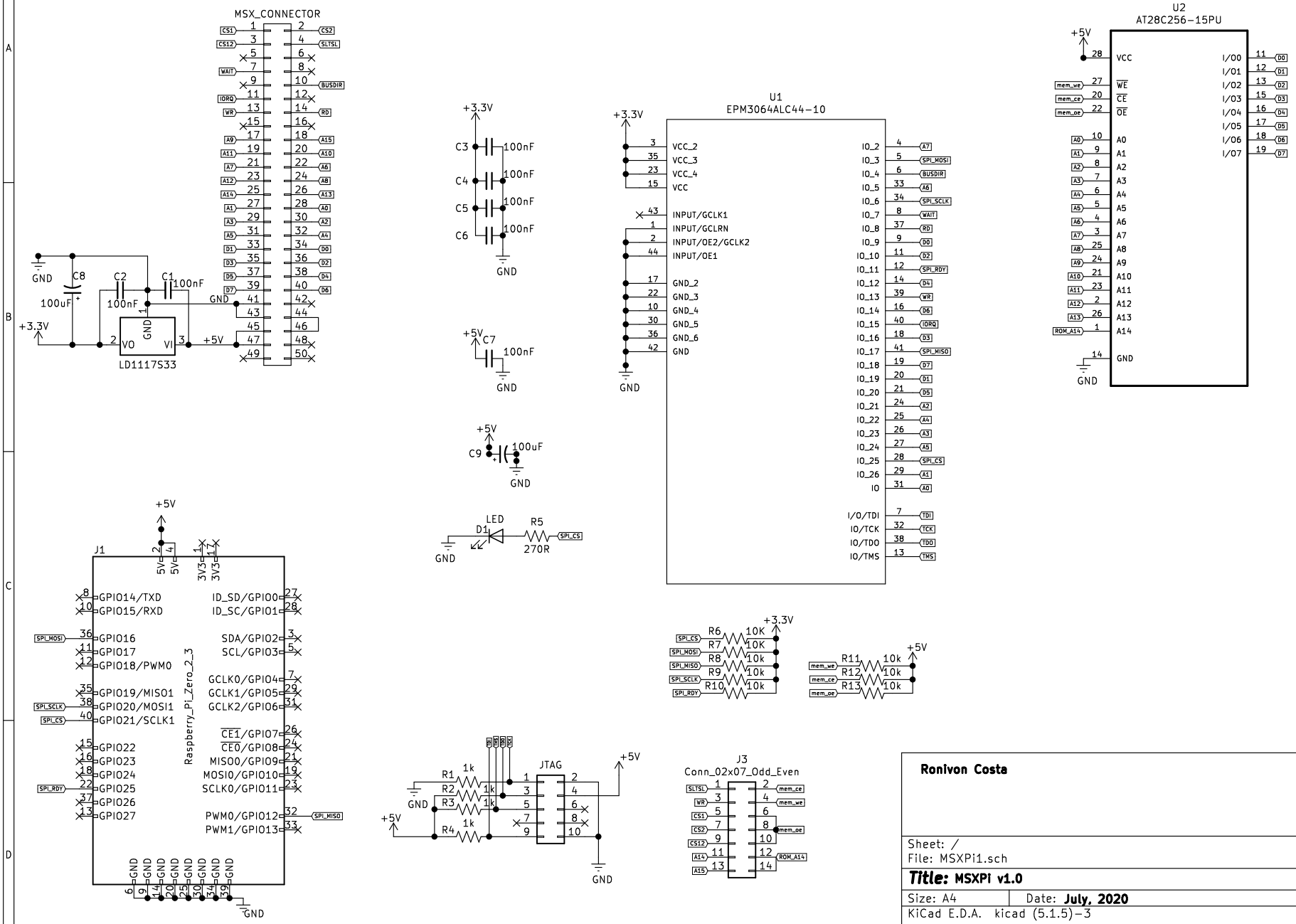

Ronivon Costa

Sheet: /
File: MSXPi1.sch

Title: MSXPi v1.0

Size: A4	Date: **July, 2020**	**Rev: v1r1**
KiCad E.D.A. kicad (5.1.5)-3		Id: 1/1