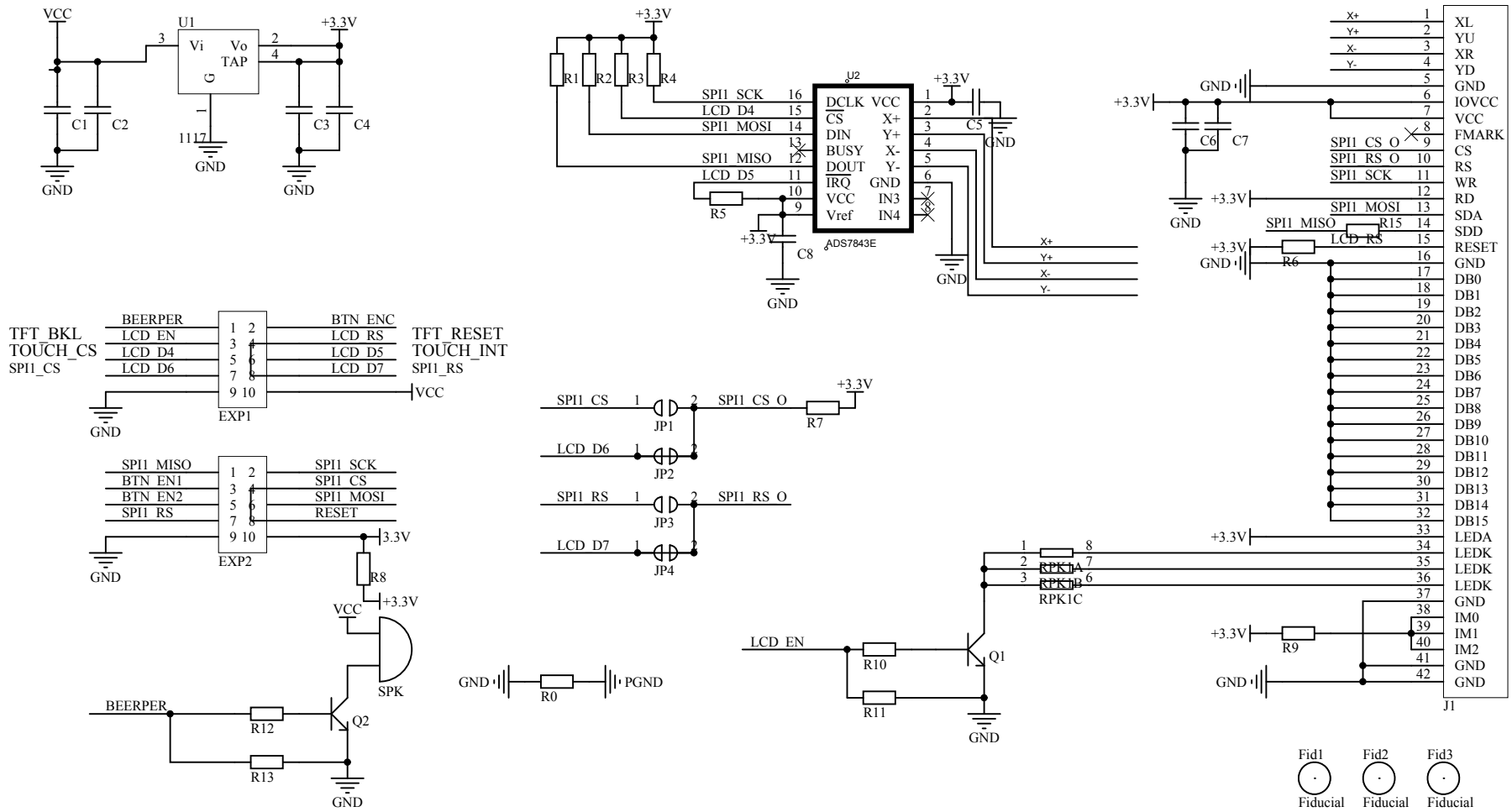

Makerbase

Title		
Size A4	Number	Revision
Date: 2021/4/9		Sheet of
File: C:\Users\..\MKS TS35.SchDoc		Drawn By: