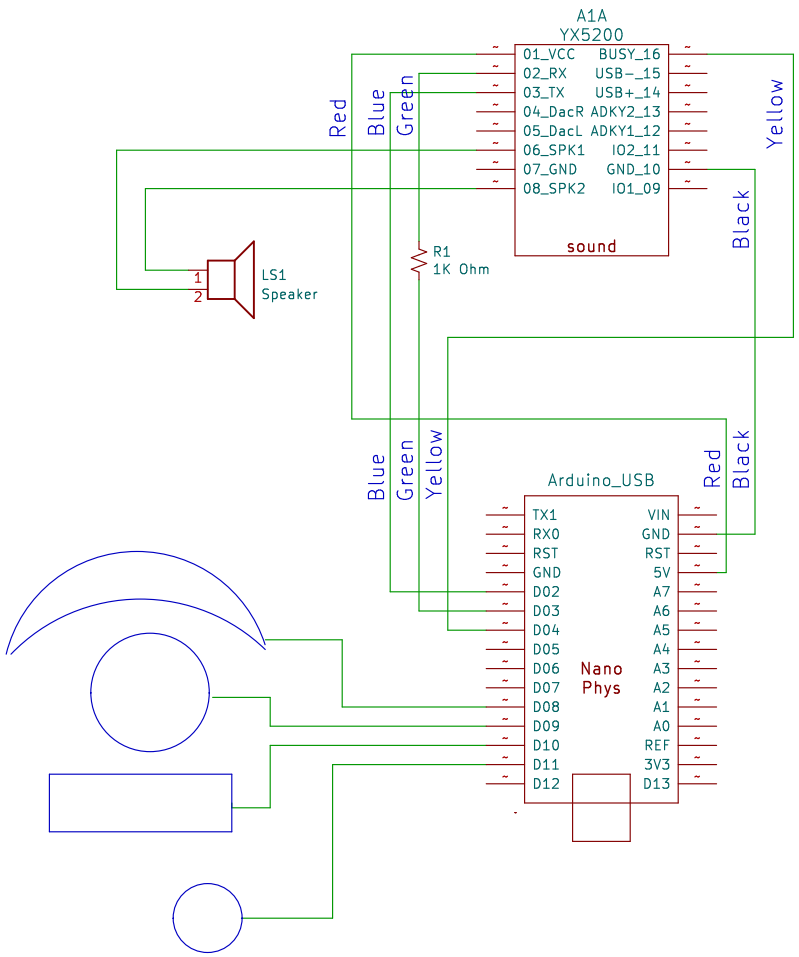

Connections to Sound Circuitry:
(YX5200/DFPlayer)

YX5200	Color	Arduino
03_TX	Blue	02
02_RX	Green	03 resistor
Busy_16	Yellow	04
PWR	Red	5V
GND	Black	GND

NOTE: Chips & Modules shown top view, notch at top

Author: https://github.com/Mark-MDO47/TODAS_DaughtersAndSons

Sheet: /
File: 04_GoBananas.kicad_sch

Title: 04 GoBananas

Size: USLetter	Date: 2024-04-27	**Rev:**
KiCad E.D.A. kicad 7.0.2		Id: 1/1