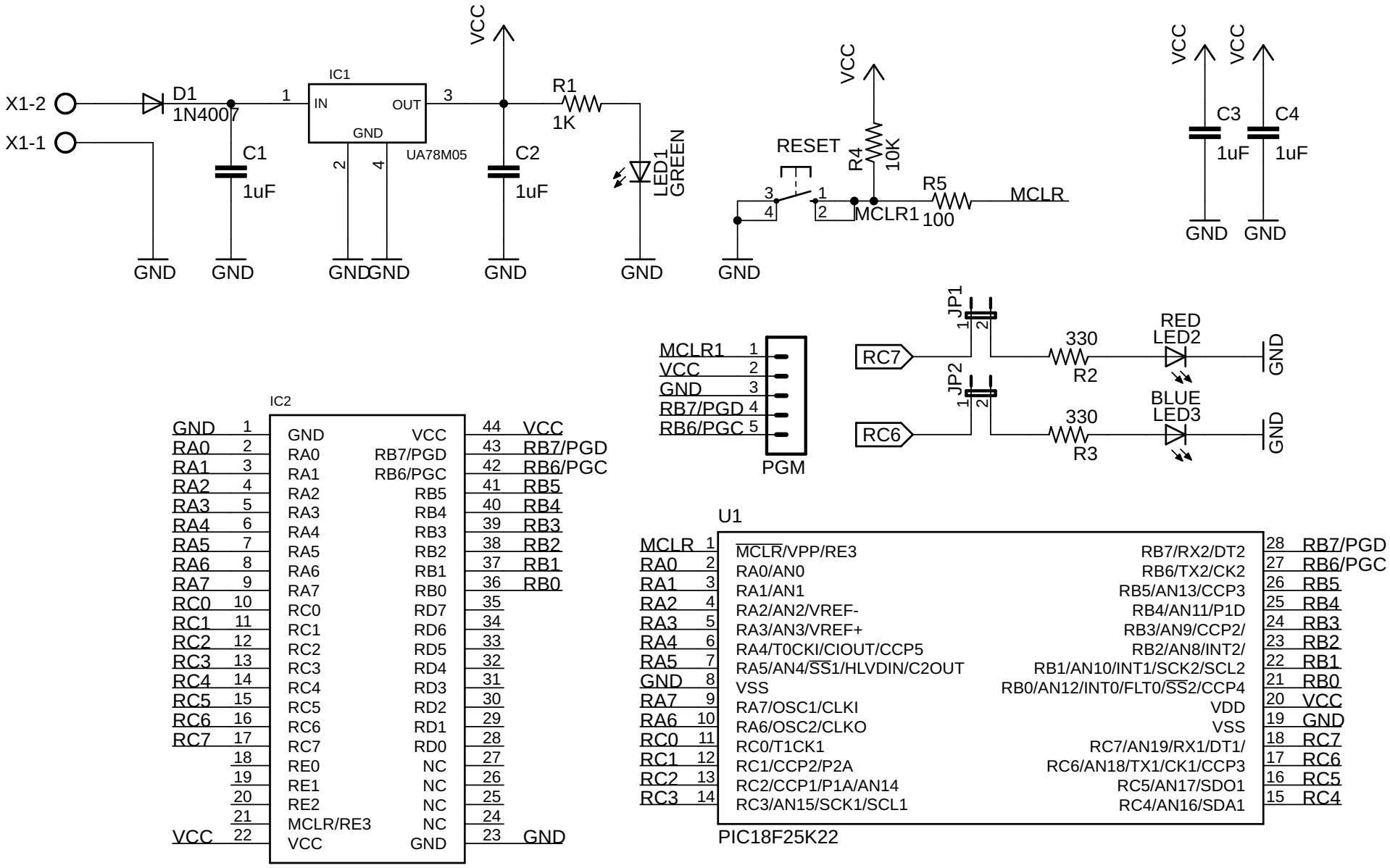
X1-2
X1-1
D1
1N4007
C1
1uF
IC1
IN
OUT
GND
UA78M05
1
2
3
4
VCC
C2
1uF
R1
1K
LED1
GREEN
GND
RESET
R4
10K
R5
100
MCLR
MCLR1
C3
C4
1uF
1uF
JP1
JP2
RC7
RC6
330
R2
R3
RED
LED2
BLUE
LED3
MCLR1
VCC
GND
RB7/PGD
RB6/PGC
PGM
IC2
GND
RA0
RA1
RA2
RA3
RA4
RA5
RA6
RA7
RC0
RC1
RC2
RC3
RC4
RC5
RC6
RC7
RE0
RE1
RE2
MCLR/RE3
VCC
RB7/PGD
RB6/PGC
RB5
RB4
RB3
RB2
RB1
RB0
RD7
RD6
RD5
RD4
RD3
RD2
RD1
RD0
NC
U1
MCLR/VPP/RE3
RA0/AN0
RA1/AN1
RA2/AN2/VREF-
RA3/AN3/VREF+
RA4/T0CKI/CIOUT/CCP5
RA5/AN4/SS1/HLVDIN/C2OUT
VSS
RA7/OSC1/CLKI
RA6/OSC2/CLKO
RC0/T1CK1
RC1/CCP2/P2A
RC2/CCP1/P1A/AN14
RC3/AN15/SCK1/SCL1
RB7/RX2/DT2
RB6/TX2/CK2
RB5/AN13/CCP3
RB4/AN11/P1D
RB3/AN9/CCP2/
RB2/AN8/INT2/
RB1/AN10/INT1/SCK2/SCL2
RB0/AN12/INT0/FLT0/SS2/CCP4
VDD
VSS
RC7/AN19/RX1/DT1/
RC6/AN18/TX1/CK1/CCP3
RC5/AN17/SDO1
RC4/AN16/SDA1
PIC18F25K22