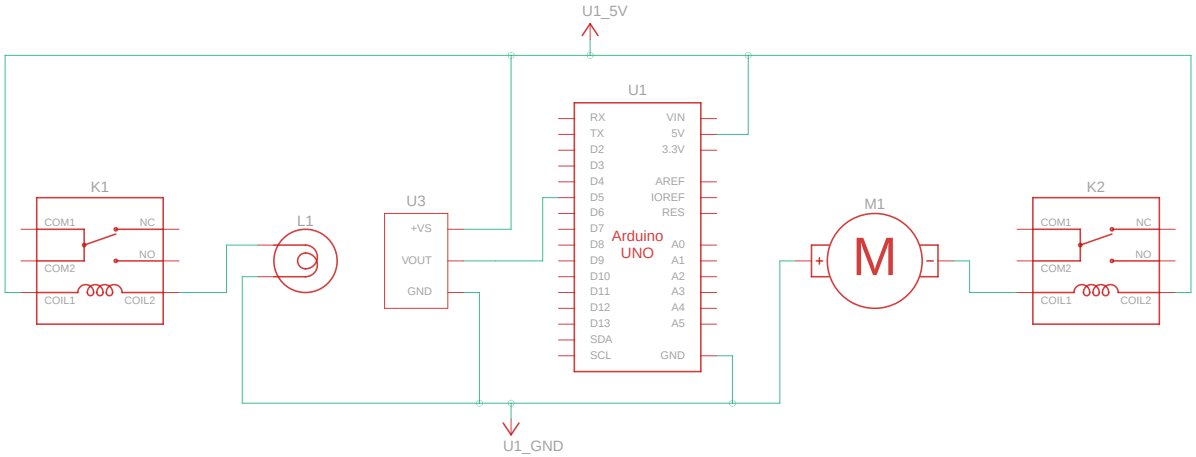

Made with Tinkercad®

Title: BE-Hydroponics	
Date: 3/11/2022, 10:14:35 PM	Sheet: 1/1