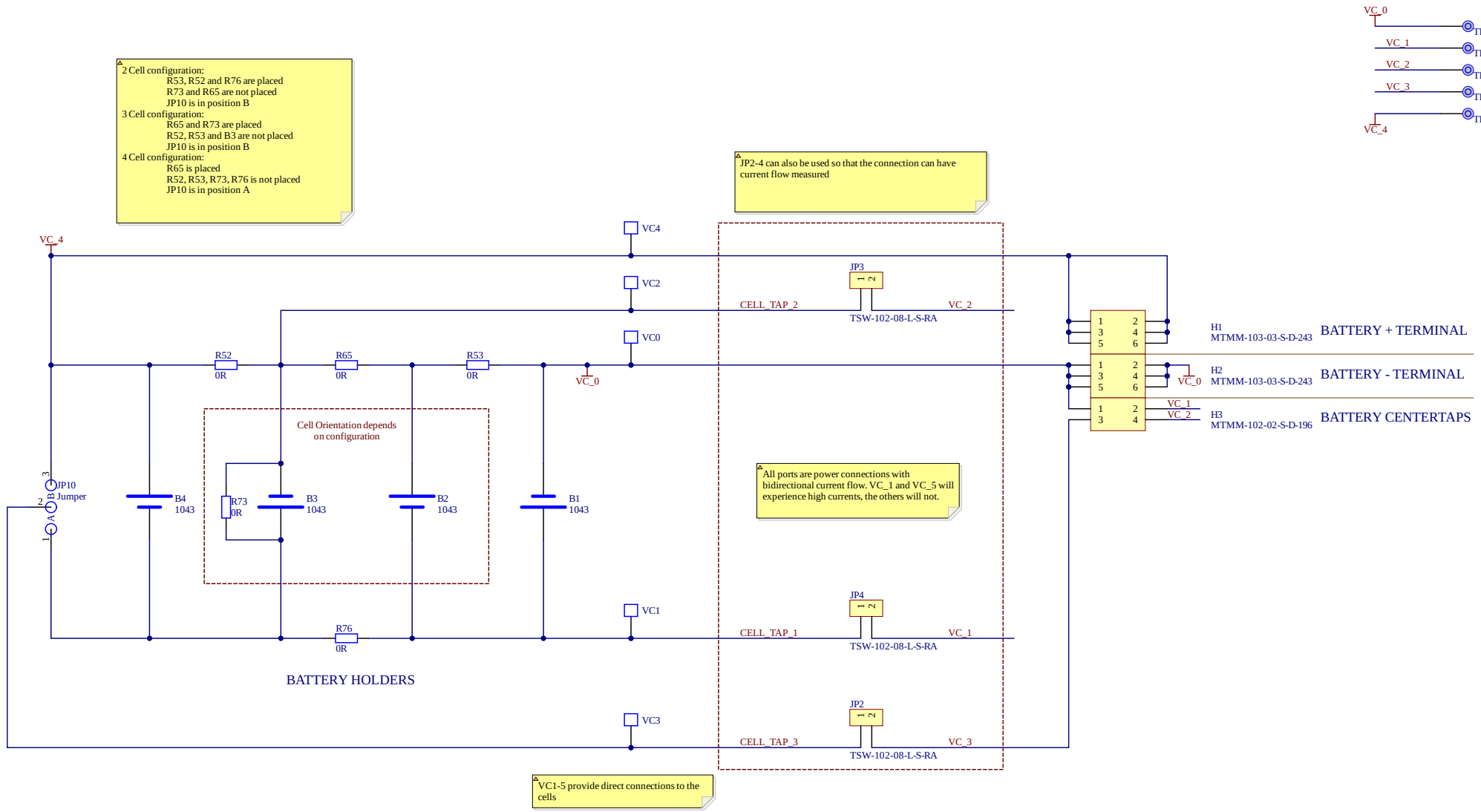

PUMPKIN INCORPORATED

750 Naples Street
San Francisco, California 94112

Title: Battery Module Development Board Cells - Battery Connections	
Part Number: 705-02190	Revision: A0
File: Battery_Module_Dev_Contacts.SchDoc	Sheet: 9 of 17
Date: 24/03/2021 Size: B	Drawn By: DJW

Doc. Rev: 01

(C) 2001-2018 Pumpkin, Inc.