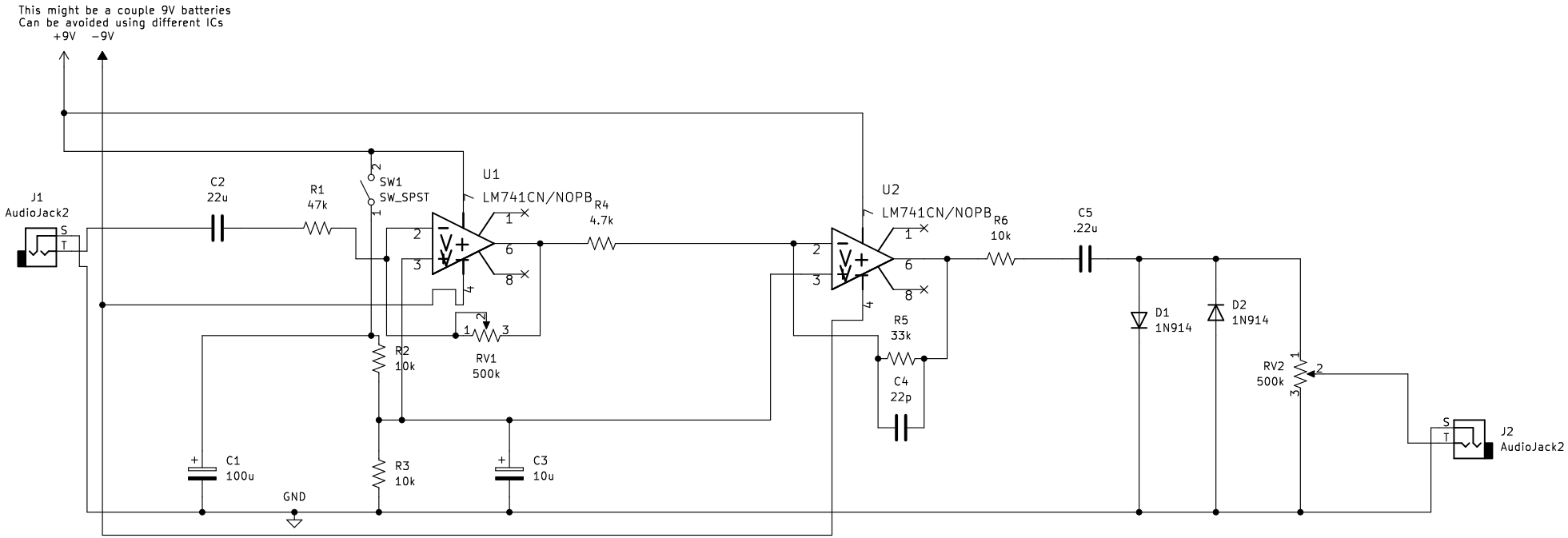

Columbia University
ELEN 1201 Final Project Schematic

Sheet: /
File: FuzzBox.kicad_sch

Title: Fuzz Box Schematic

Size: A4	Date: 12/6/2022	**Rev:**
KiCad E.D.A. kicad (6.0.7)		Id: 1/1