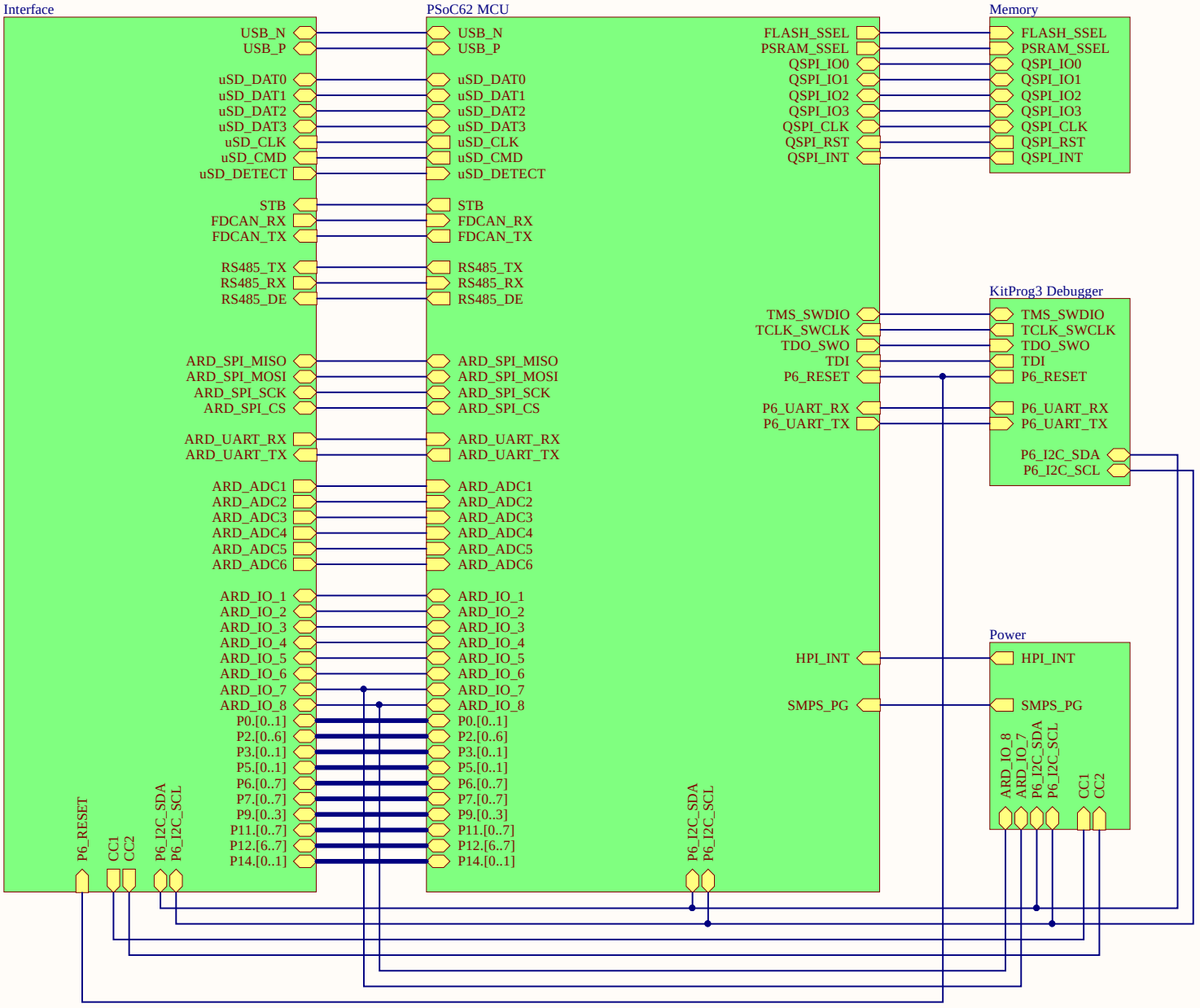

Title	***Schematics Layout***		
Size: A4	Revision: Rev. 1	Drawn By: GDR	
Date: 2021-08-17 Time: 14:54:19	Sheet 1 of 6		

Rutronik Elektronische Bauelemente GmbH
Jonavos g. 30
44262 Kaunas
Lithuania

RUTRONIK ELECTRONICS WORLDWIDE

PSoC62 Analog & Digital

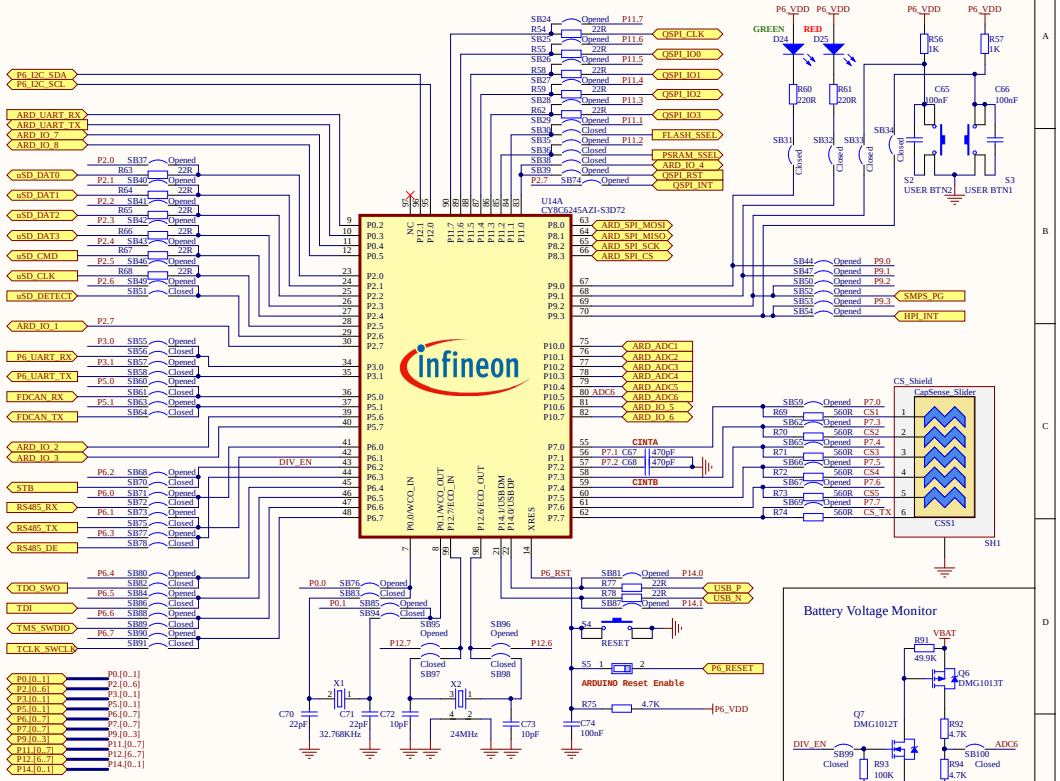

PSoC62 Power Supply

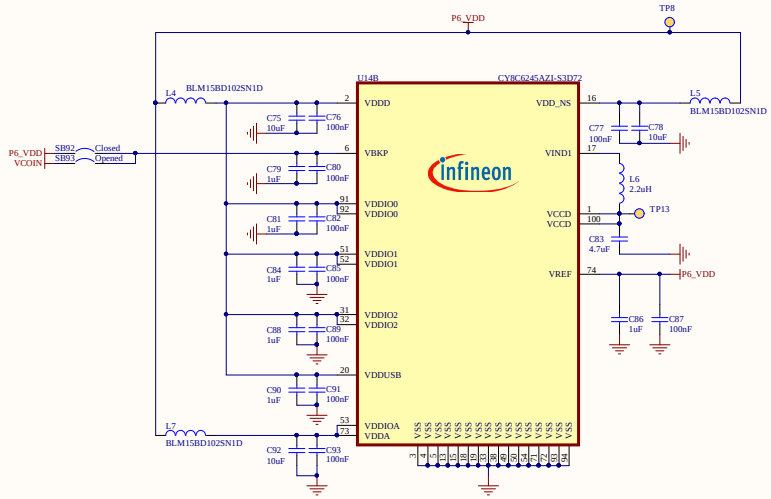

Title: *PSoC62 System*			*Rutronik Elektronische Bauelemente GmbH* *Jonavos g. 30* *44262 Kaunas* *Lithuania*
Size: A3	Revision: Rev. 1	Drawn By: GDR	
Date: 2021-08-17 Time: 14:54:20	Sheet 2 of 6		

QSPI PSRAM

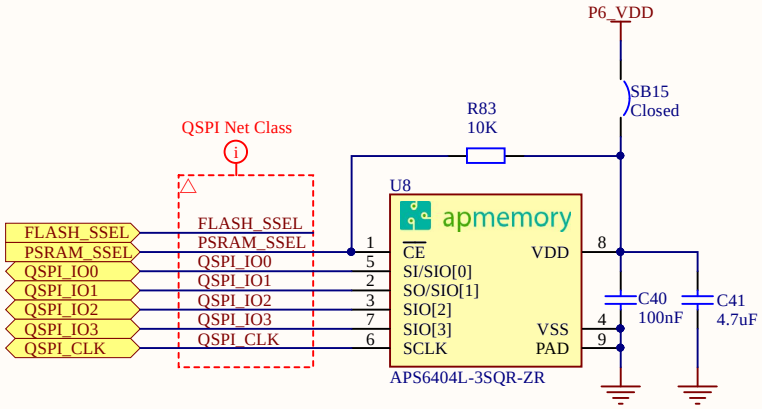

QSPI Secure Flash

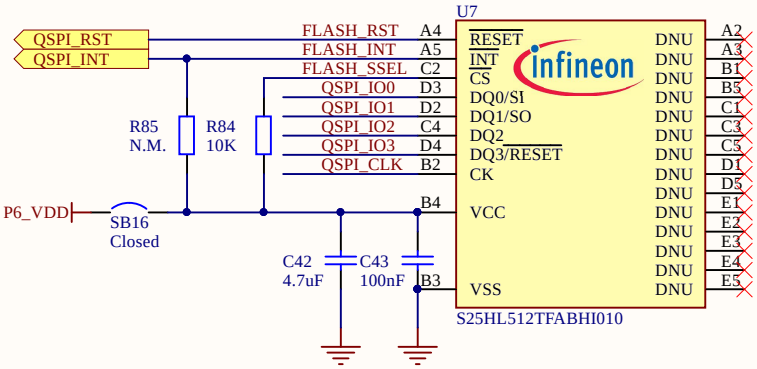

Title	***External Memory***		
Size: A4	Revision:	Drawn By: GDR	
Date: 2021-08-17 Time: 14:54:20	Sheet 3 of 6		

Rutronik Elektronische Bauelemente GmbH
Jonavos g. 30
44262 Kaunas
Lithuania

RUTRONIK ELECTRONICS WORLDWIDE

PSoC 5LP based KitProg3

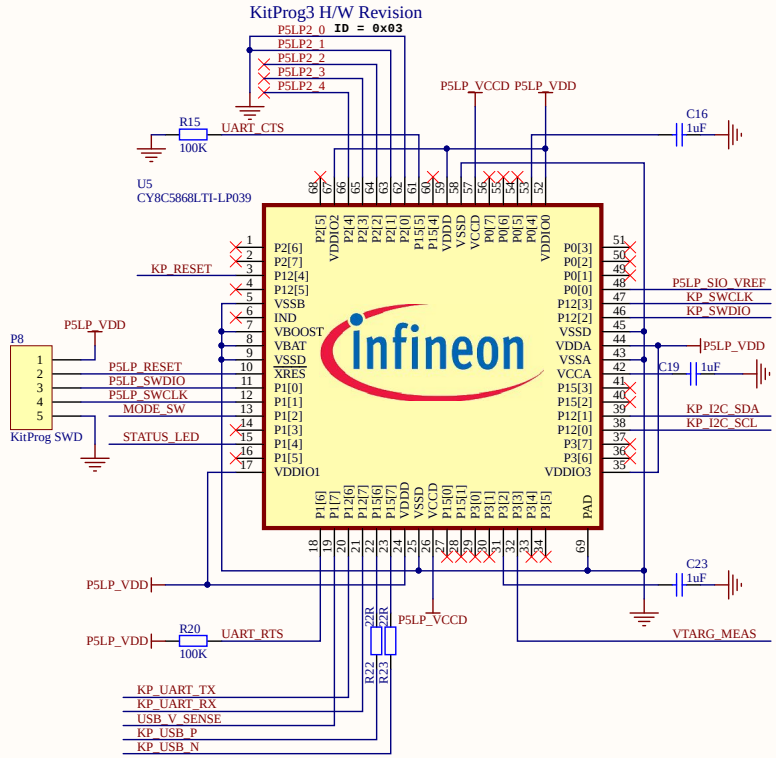

Voltage Monitoring & Power

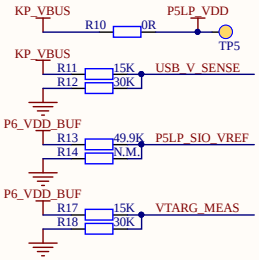

KitProg USB Interface

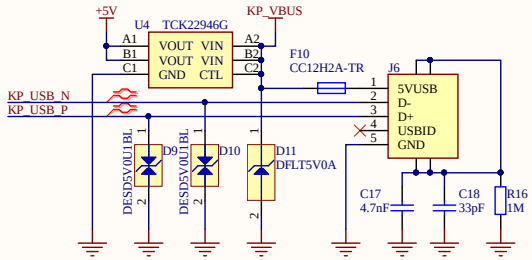

JTAG & SWD Header

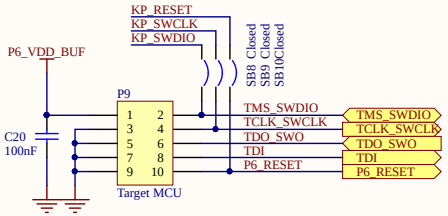

Target Voltage Follower

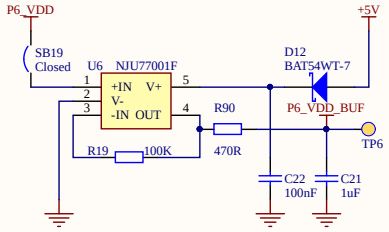

KitProg I2C Interface

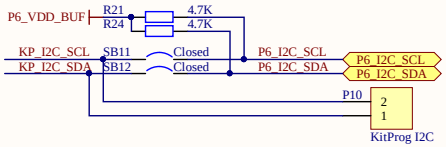

KitProg Status LED

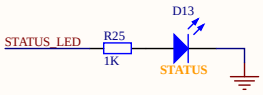

PSoC 5LP Decoupling Capacitors

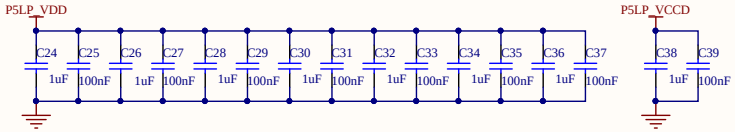

KitProg UART Interface

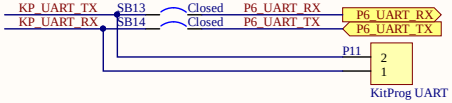

Mode Switch

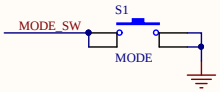

Title: *KitProg3 Debugger*			
Size: A3	Revision: Rev. 1	Drawn By: GDR	
Date: 2021-08-17 Time: 14:54:20	Sheet 4 of 6		

Rutronik Elektronische Bauelemente GmbH
Jonavos g. 30
44262 Kaunas
Lithuania

RUTRONIK ELECTRONICS WORLDWIDE

Main SMPS

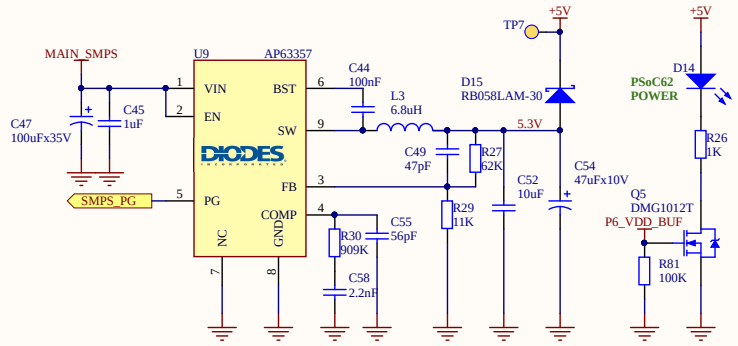

3.3V Buck/Boost

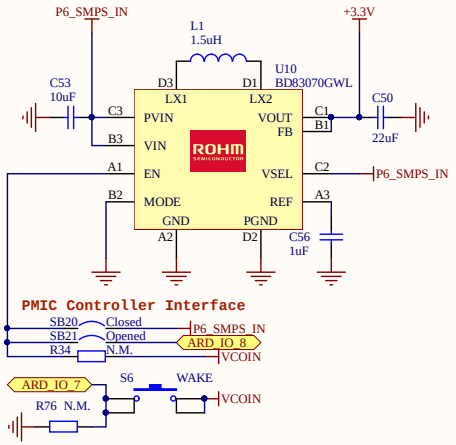

Li-ION Charger

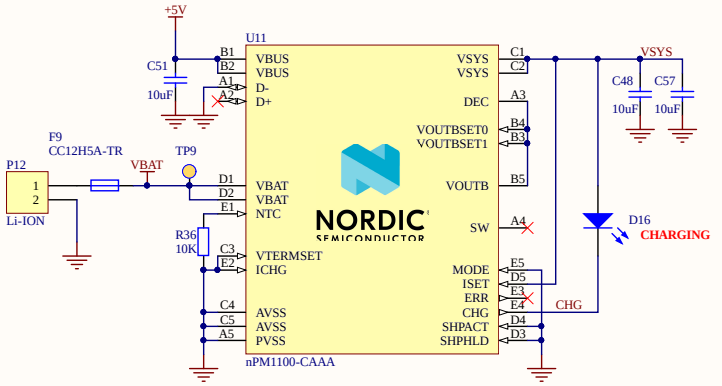

USB-C Power Delivery Sink Device

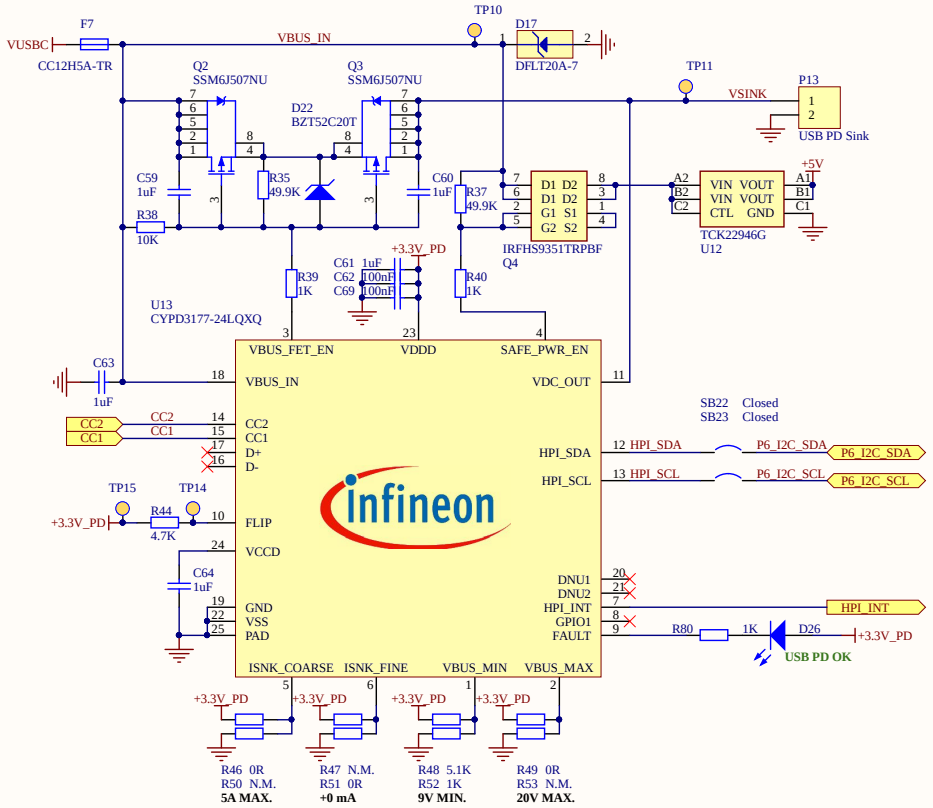

Power Source Selectors

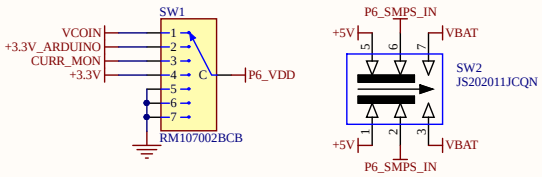

OR-ing Diodes

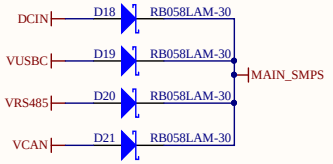

DC Jack Input

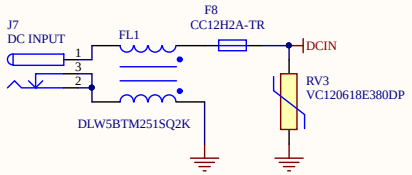

Arduino Power Supply

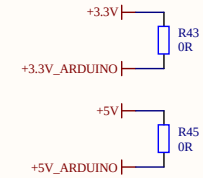

Coin Battery & GND Test Point

Current Monitor Terminals

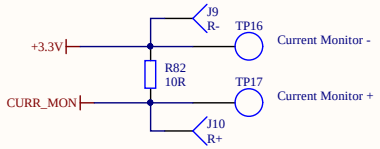

Arduino

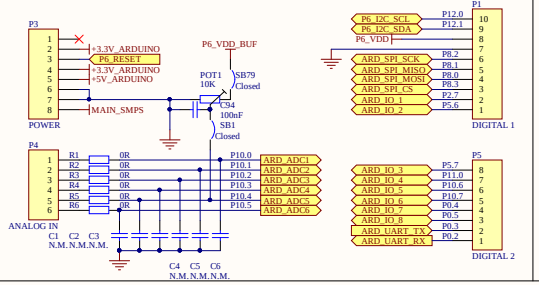

GPIO Headers

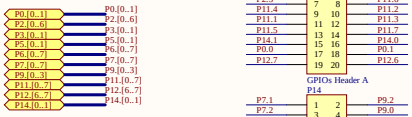

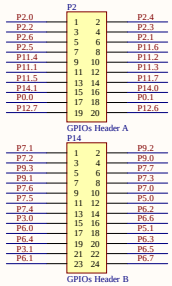

USB Type-C

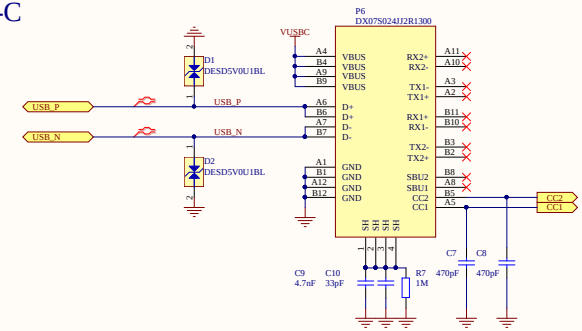

Micro SD Card

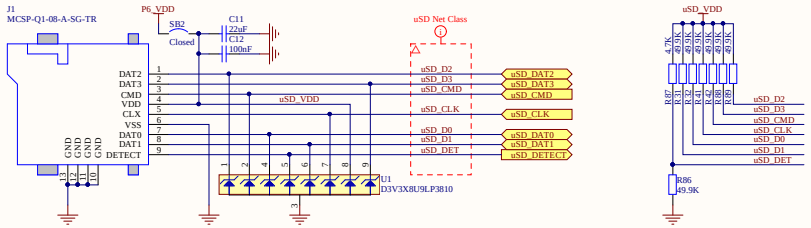

CAN FD

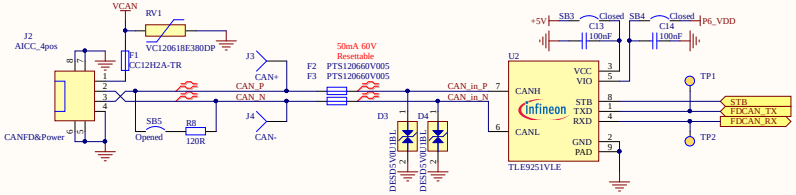

RS485

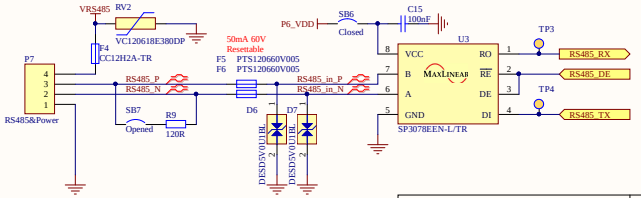

Title: *Interface*			*Rutronik Elektronische Bauelemente GmbH* *Jonavos g. 30* *44262 Kaunas* *Lithuania*
Size: A3	Revision: Rev. 1	Drawn By: GDR	
Date: 2021-08-17 Time: 14:54:21	Sheet 6 of 6		

RUTRONIK ELECTRONICS WORLDWIDE

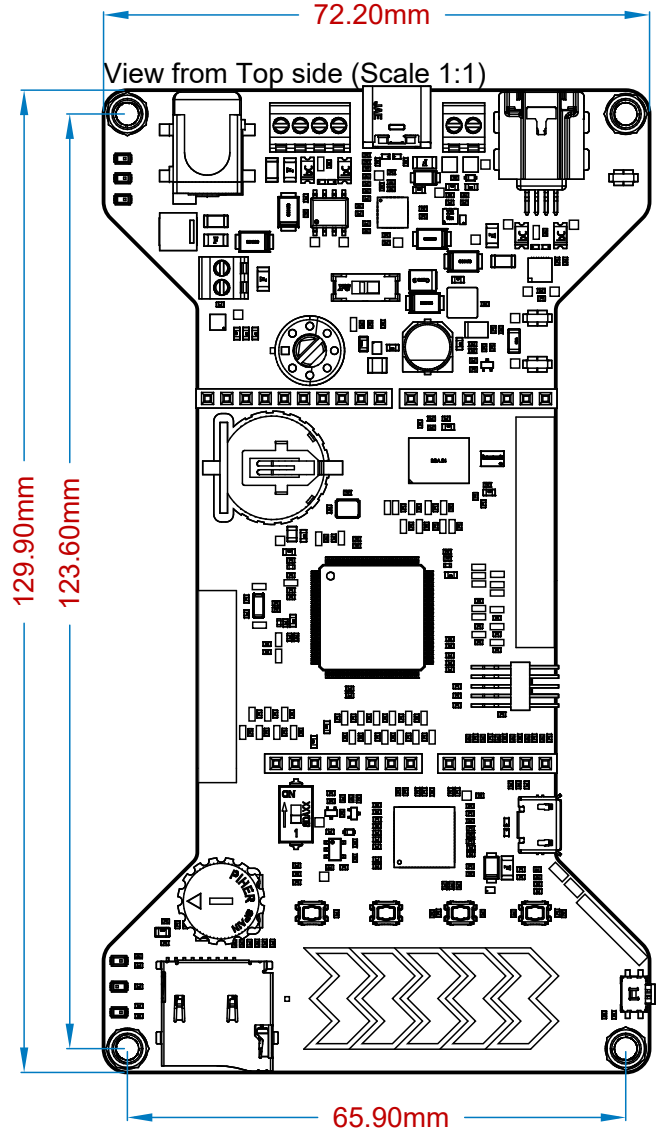

View from Top side (Scale 1:1)

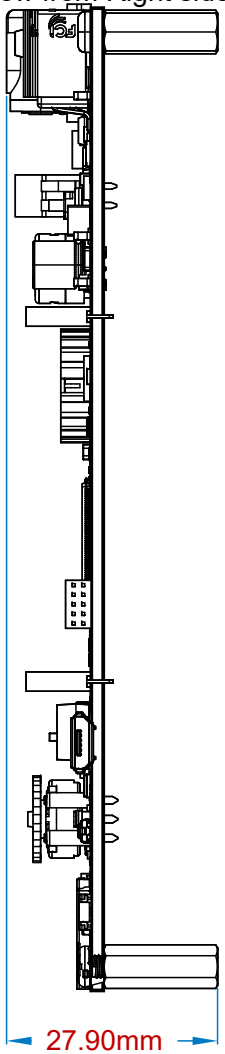

View from Right side (Scale 1:1)

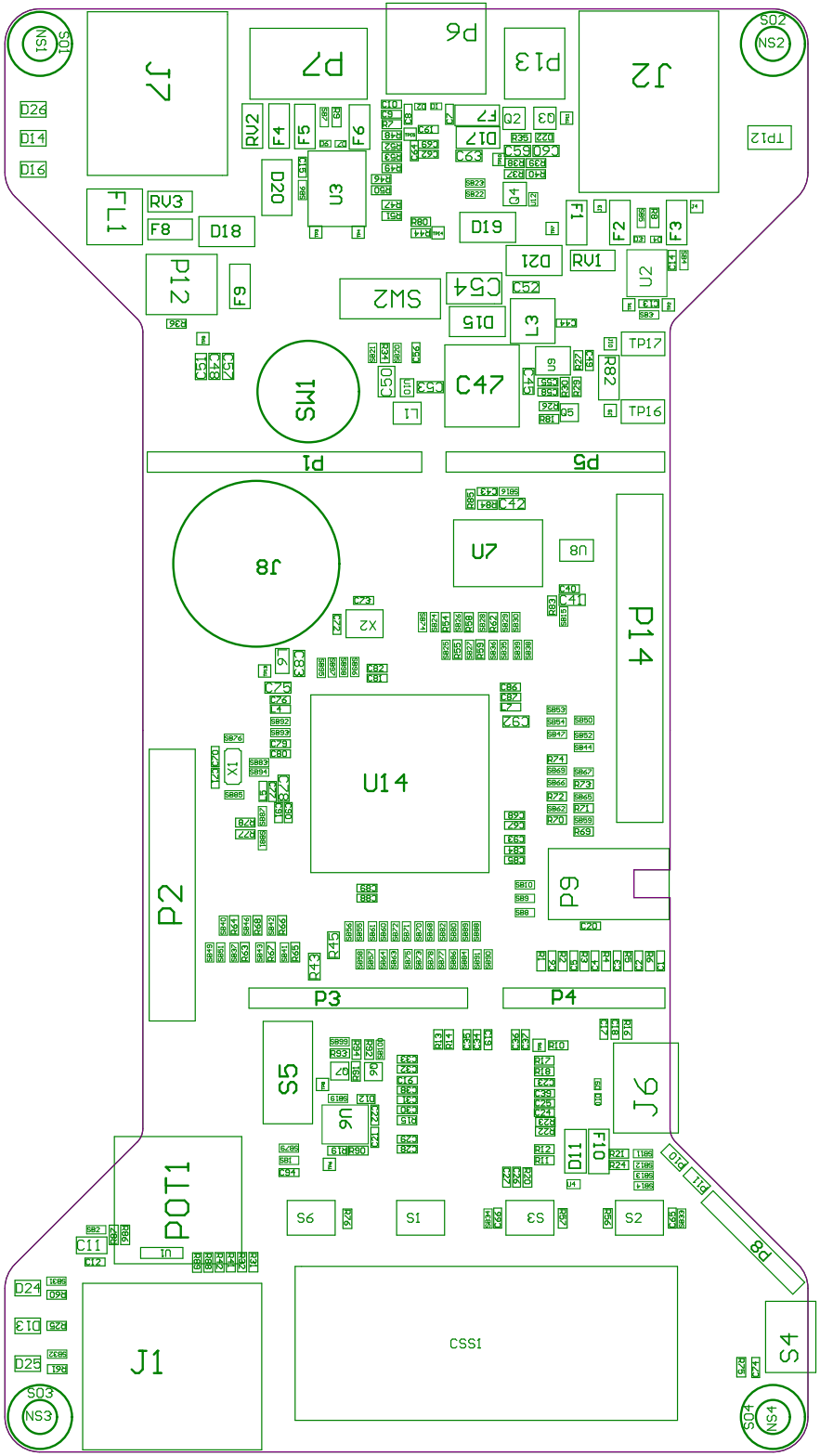
J7
P7
P6
P13
J2
SO1
NS1
SO2
NS2
D26
D14
D16
RV2
F4
F5
F6
F7
D17
Q2
Q3
TP12
D20
U3
C63
C59
C60
Q4
FL1
RV3
F8
D18
D19
F1
F2
F3
P12
F9
SW2
C54
D21
RV1
U2
D15
L3
TP17
C47
C50
C53
C45
Q9
R82
TP16
SW1
L1
P1
P5
J8
U7
U8
C42
C41
P14
X2
C75
C76
C80
C82
C92
U14
X1
P2
P9
R45
R43
P3
P4
S5
J6
U6
D11
F10
POT1
C11
U1
S6
S1
S3
S2
P8
D24
D13
D25
J1
CSS1
S4
SO3
NS3
SO4
NS4

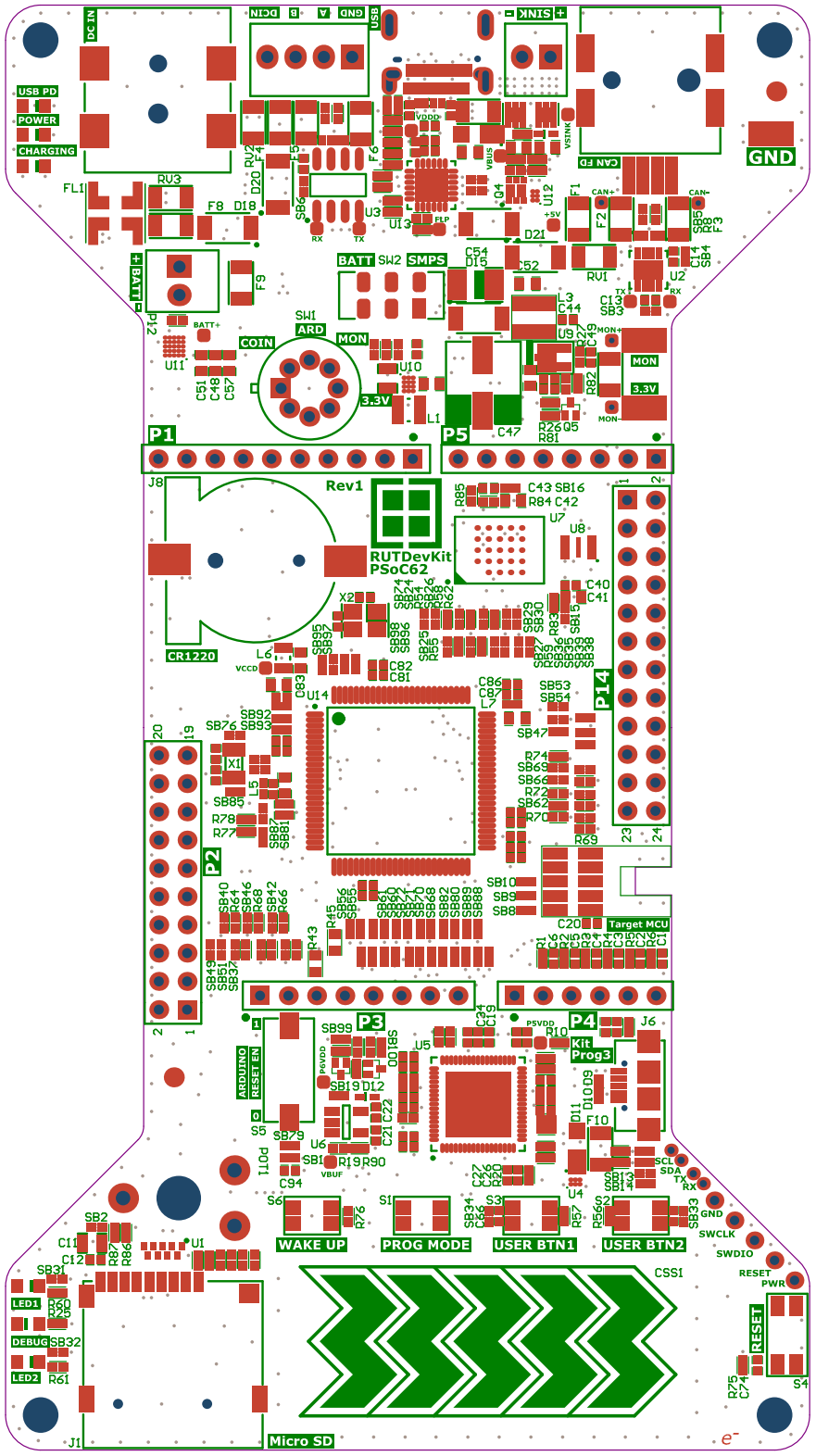
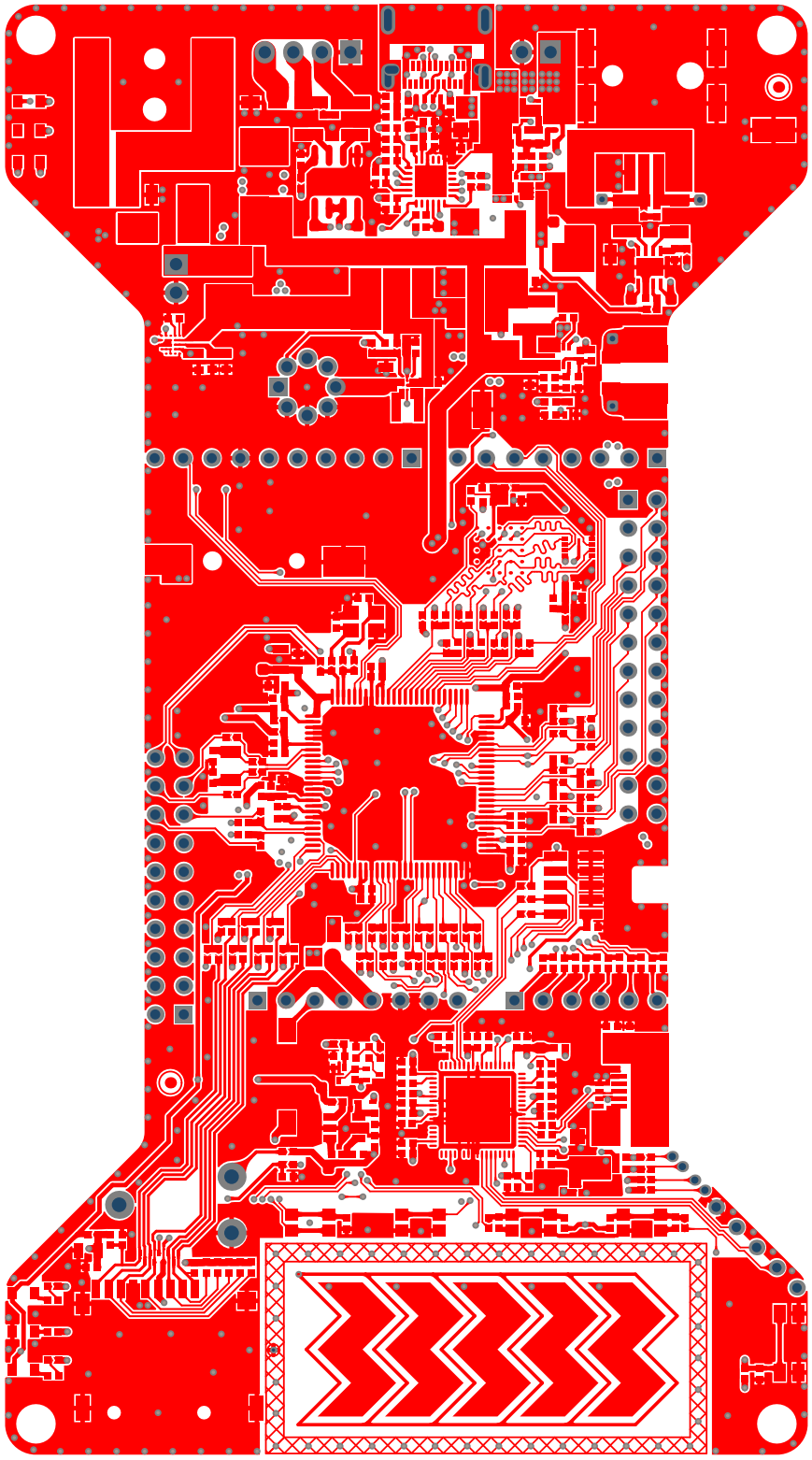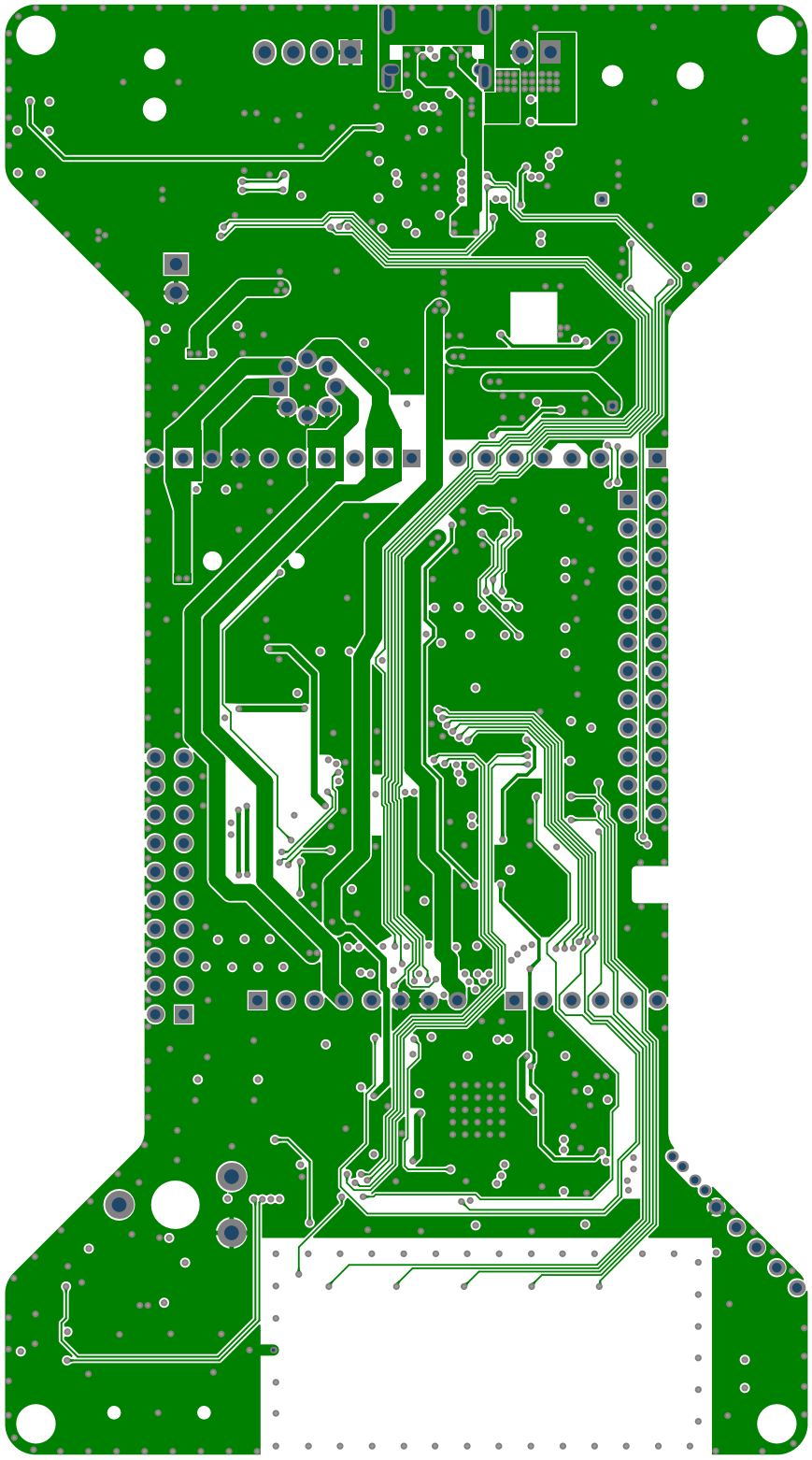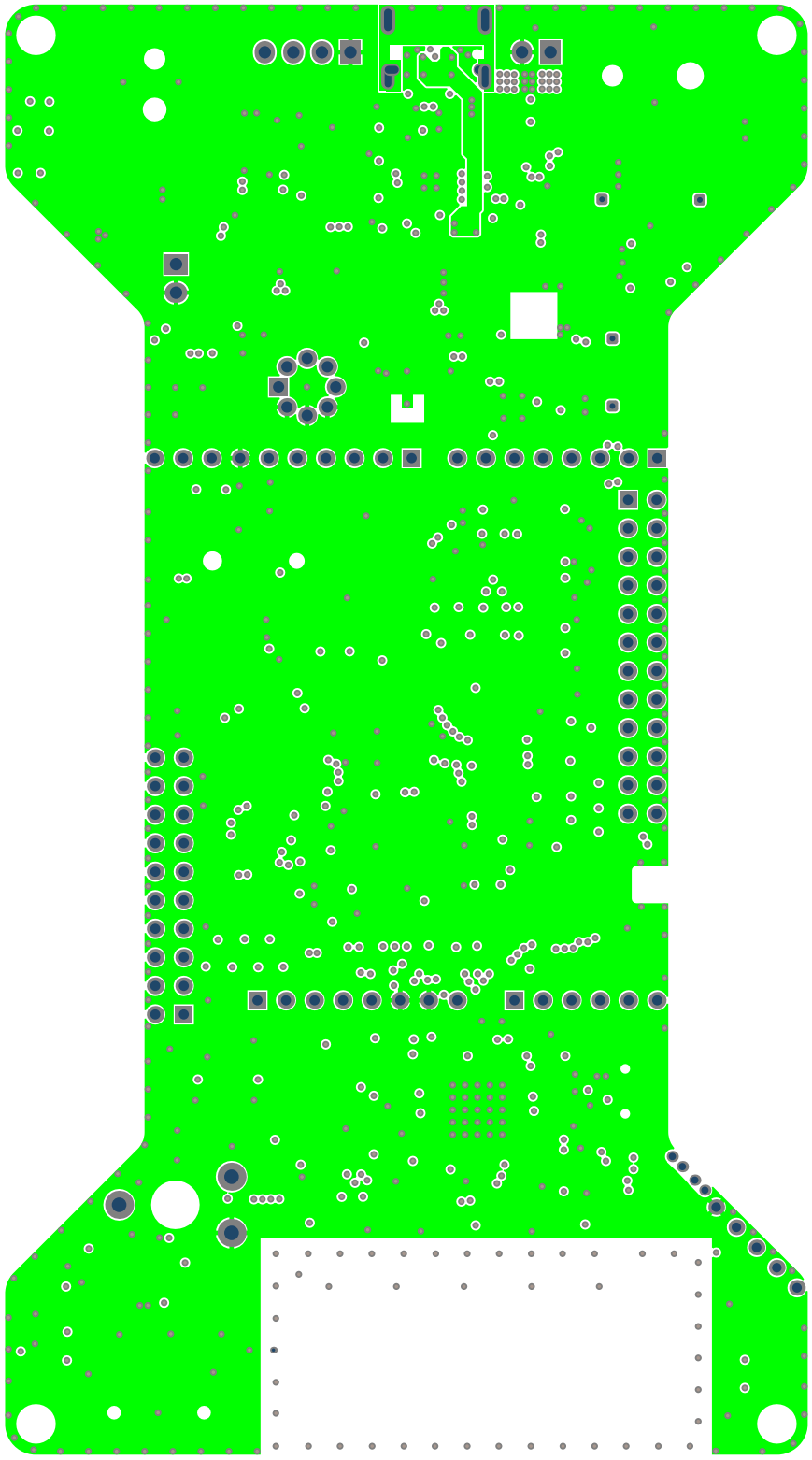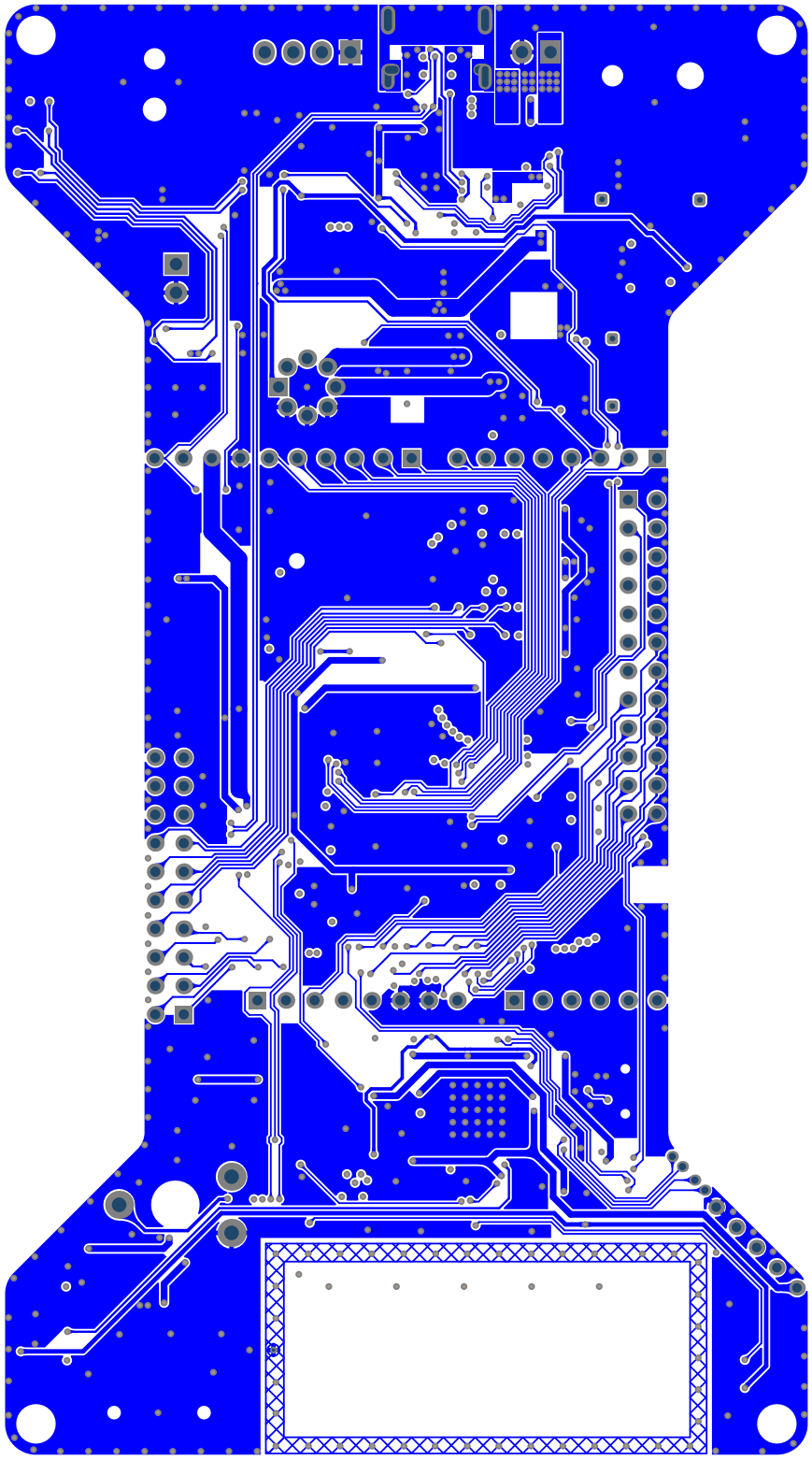
DC IN
USB PD
POWER
CHARGING
DCIN
B
A
GND
USB
SINK
CAN FD
GND
BATT
SW2
SMPS
SW1
ARD
COIN
MON
3.3V
P1
P5
Rev1
RUTDevKit
PSoC62
CR1220
P14
P2
Target MCU
P3
P4
Kit
Prog3
ARDUINO
RESET EN
WAKE UP
PROG MODE
USER BTN1
USER BTN2
CSS1
SCL
SDA
TX
RX
GND
SWCLK
SWDIO
RESET
PWR
RESET
LED1
DEBUG
LED2
Micro SD