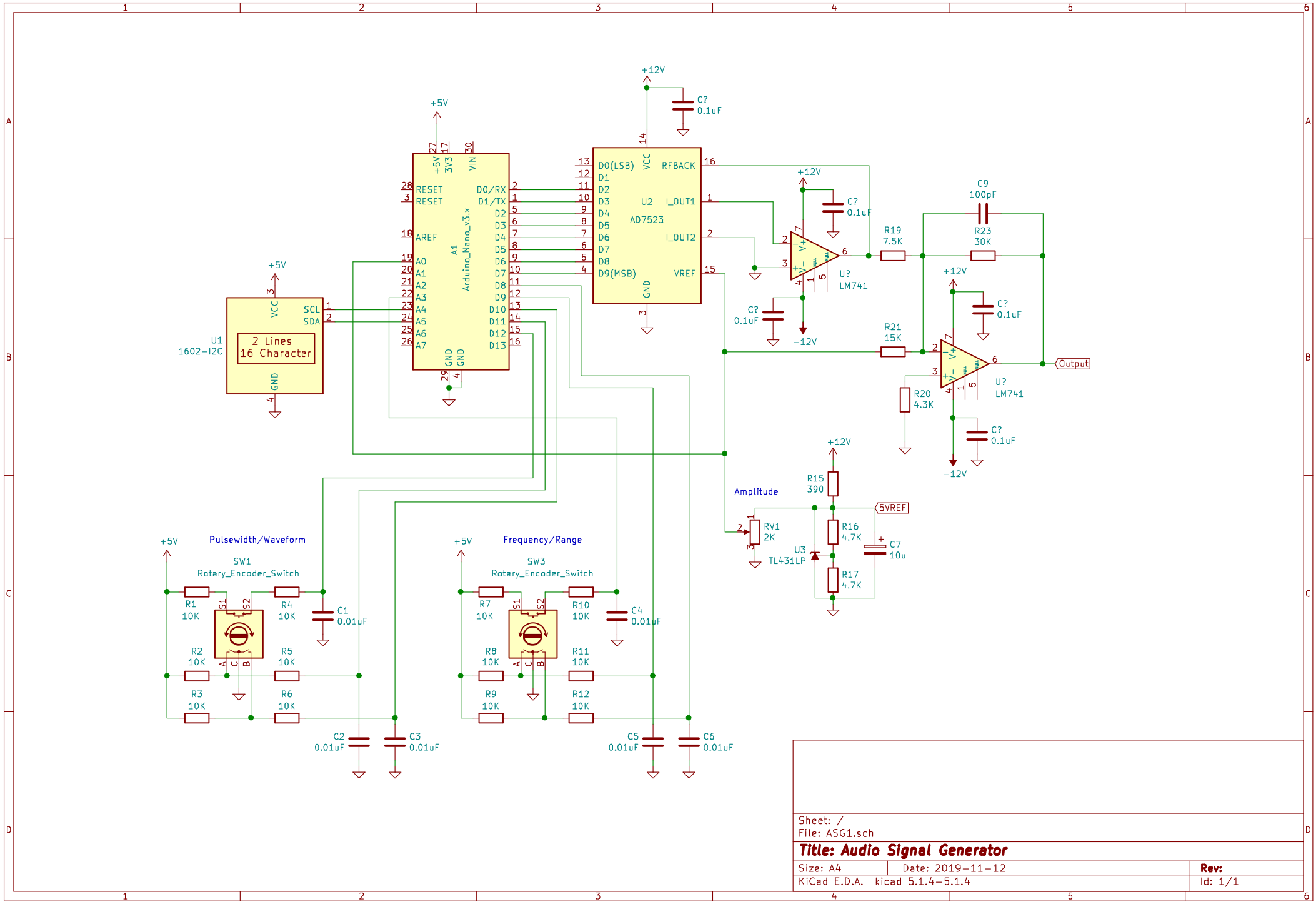

Sheet: /
File: ASG1.sch

Title: Audio Signal Generator

Size: A4	Date: 2019-11-12	Rev:
KiCad E.D.A. kicad 5.1.4-5.1.4		Id: 1/1