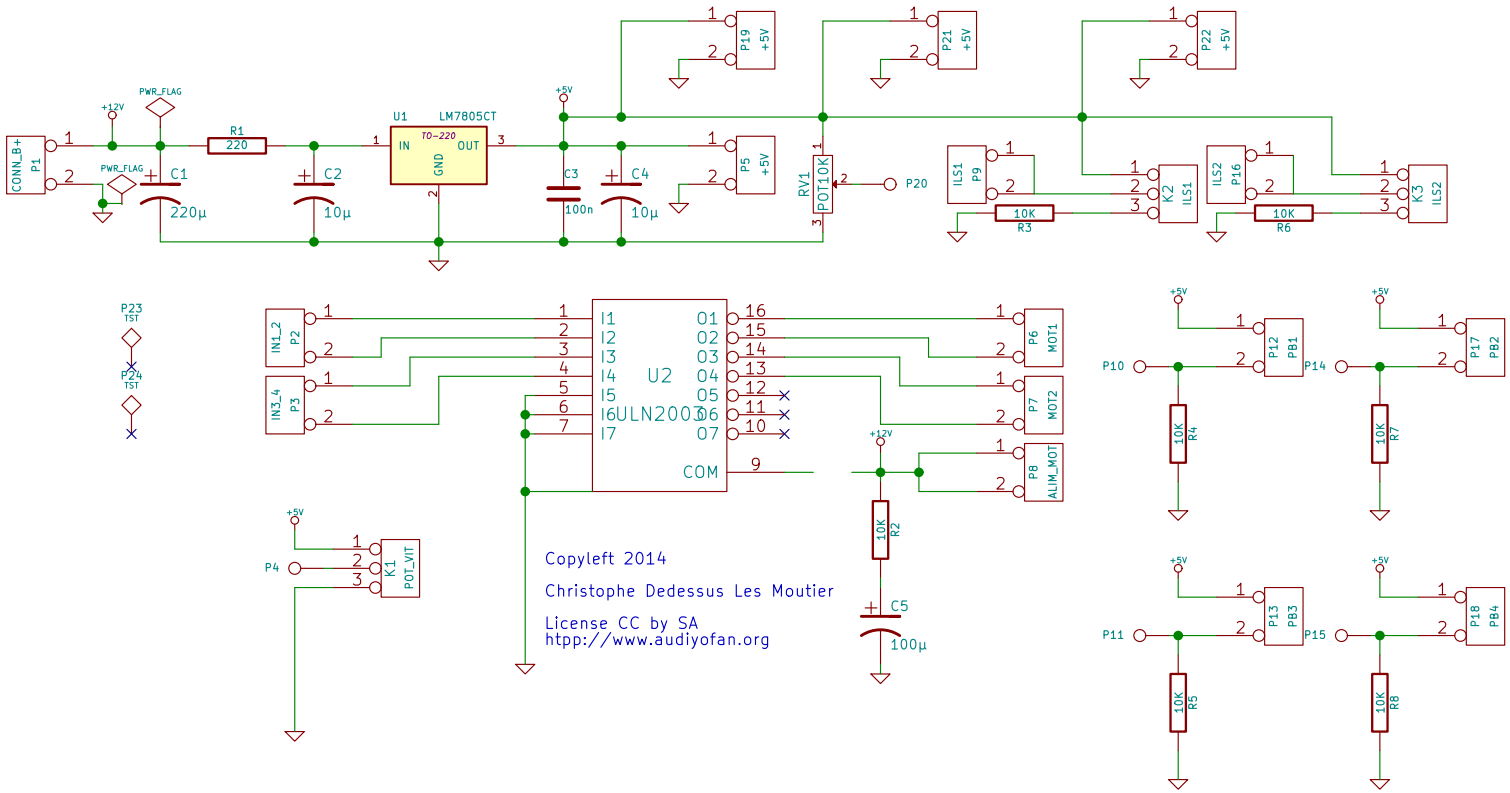

Copyleft 2014

Christophe Dedessus Les Moutier

License CC by SA
htpp://www.audiyofan.org

Fourche Optique

Fourcheoptique.sch

Sheet: /
File: Moteur_pap.sch

Title:

Size: A4	Date:	Rev:
KiCad E.D.A. eeschema (2014-04-09 BZR 4792)-product		Id: 1/2