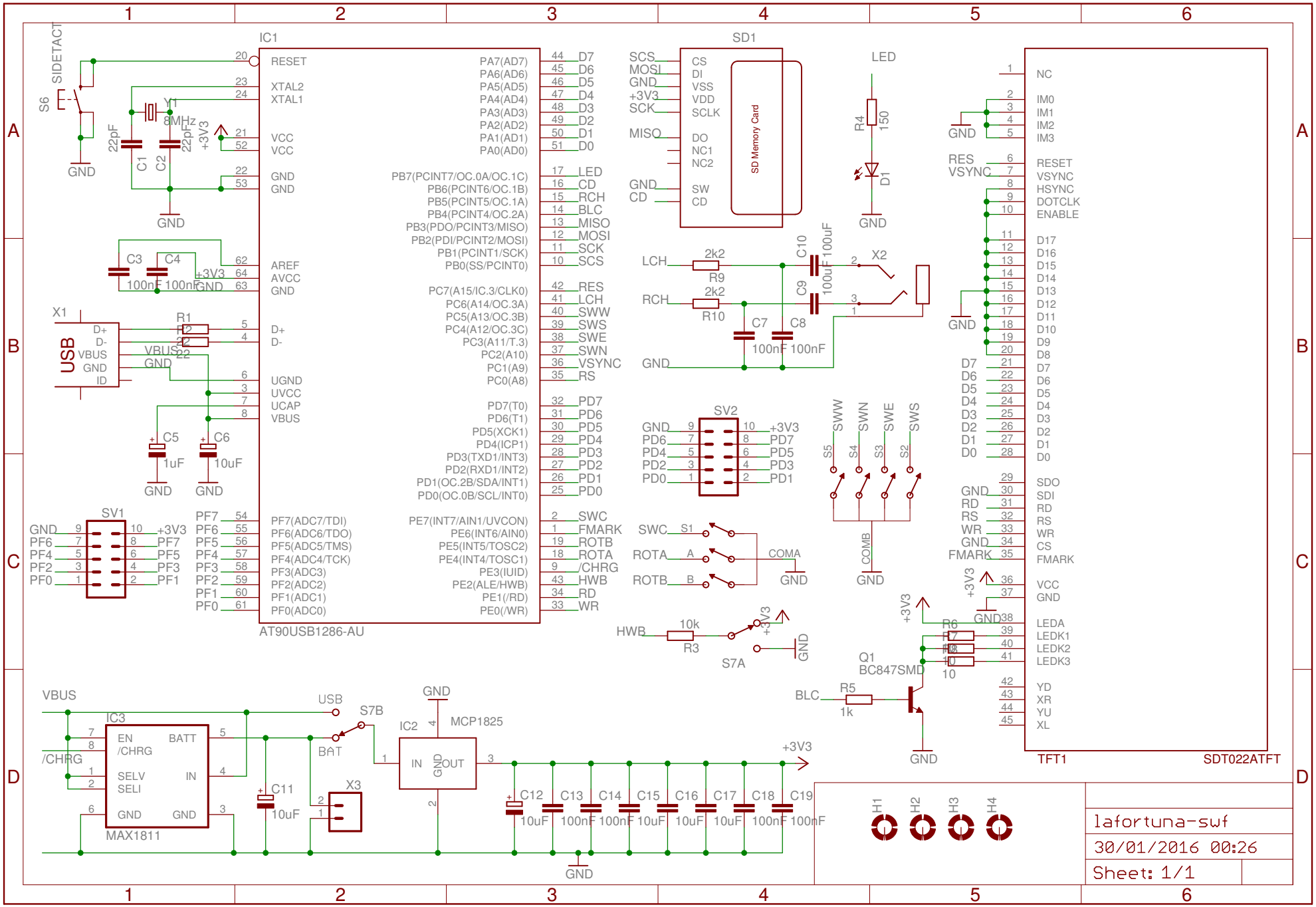
IC1
AT90USB1286-AU
SD1
SD Memory Card
LED
TFT1
SDT022ATFT
SV1
SV2
X1
USB
X2
X3
S6
SIDETACT
Y1
8MHz
22pF
C1
C2
C3
C4
100nF
C5
1uF
C6
10uF
R1
22
R2
22
R4
150
D1
R9
2k2
R10
2k2
C7
C8
C9
C10
100uF
S5
S4
S3
S2
SWW
SWN
SWE
SWS
COMA
COMB
S1
S7A
R3
10k
R6
10
Q1
BC847SMD
R5
1k
IC3
MAX1811
EN
/CHRG
SELV
SELI
BATT
IN
GND
S7B
USB
BAT
IC2
MCP1825
C11
10uF
C12
C13
C14
C15
C16
C17
C18
C19
H1
H2
H3
H4
lafortuna-swf
30/01/2016 00:26
Sheet: 1/1