GPS

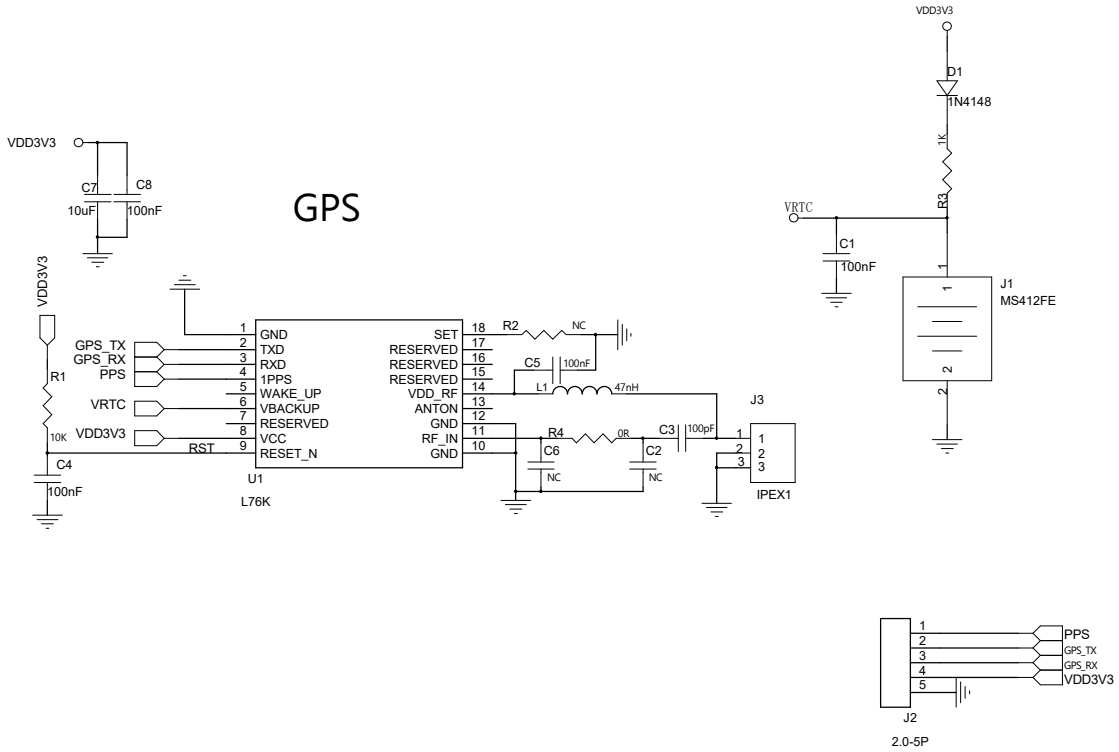
VDD3V3
C7
10uF
C8
100nF
VDD3V3
R1
10K
C4
100nF
GPS_TX
GPS_RX
PPS
VRTC
VDD3V3
RST
1 GND
2 TXD
3 RXD
4 1PPS
5 WAKE_UP
6 VBACKUP
7 RESERVED
8 VCC
9 RESET_N
U1
L76K
18 SET
17 RESERVED
16 RESERVED
15 RESERVED
14 VDD_RF
13 ANTON
12 GND
11 RF_IN
10 GND
R2
NC
C5
100nF
L1
47nH
R4
0R
C6
NC
C2
NC
C3
100pF
J3
IPEX1
VDD3V3
D1
1N4148
1K
R3
VRTC
C1
100nF
J1
MS412FE
PPS
GPS_TX
GPS_RX
VDD3V3
J2
2.0-5P