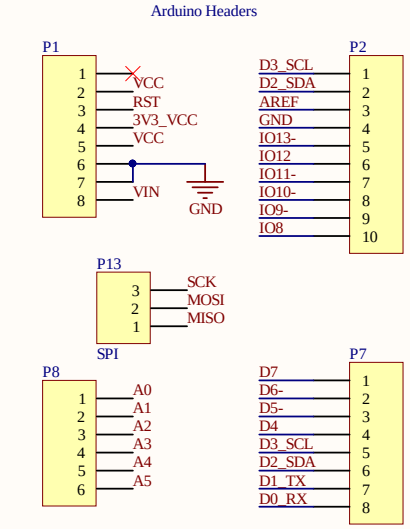

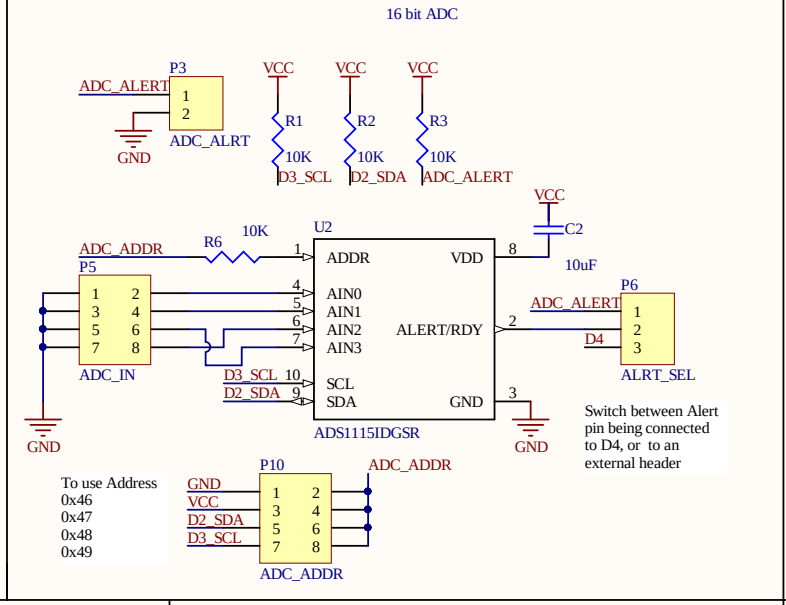

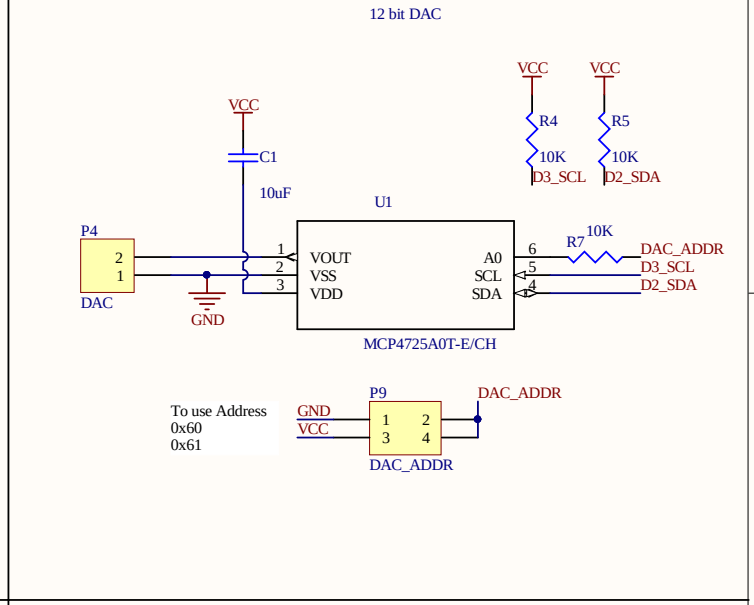

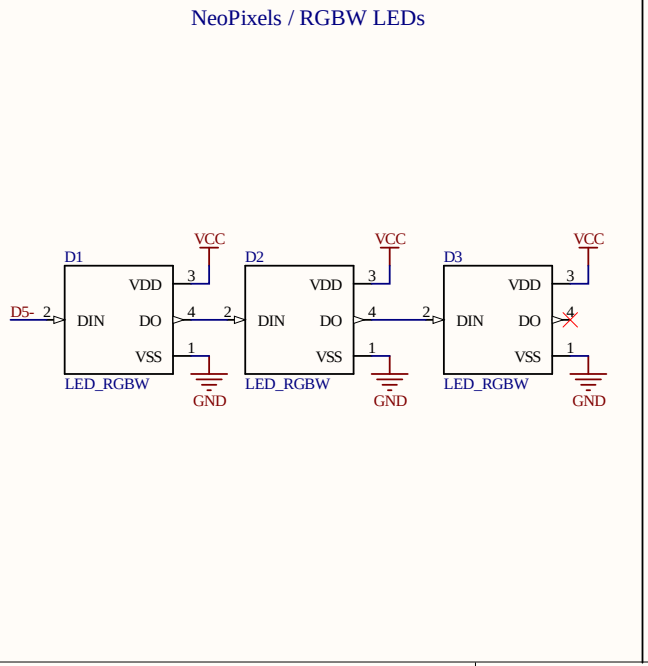

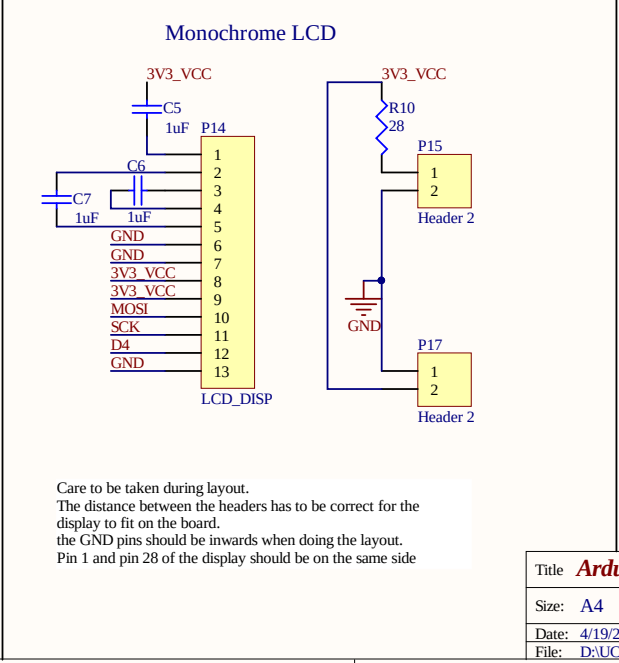

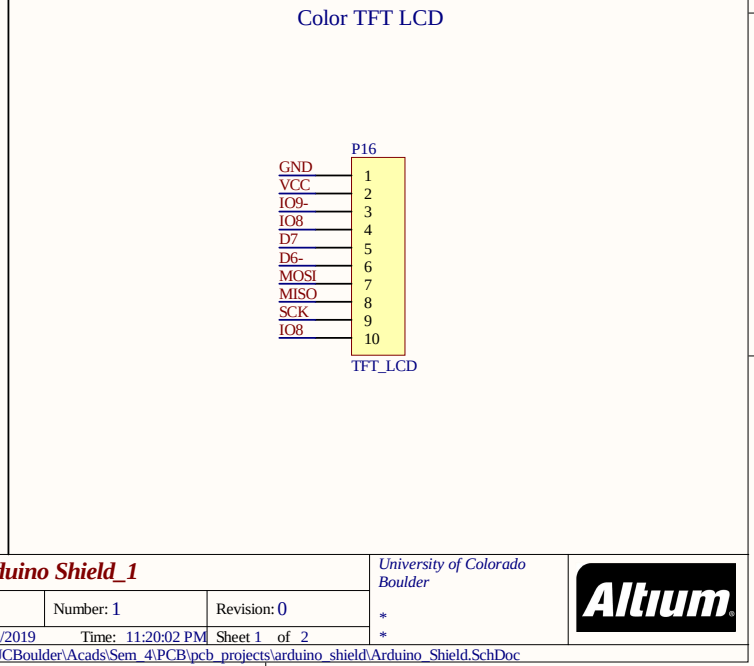

Title	*Arduino Shield_1*		*University of Colorado Boulder*
Size: A4	Number: 1	Revision: 0	*
Date: 4/19/2019	Time: 11:20:02 PM	Sheet 1 of 2	*
File: D:\UCBoulder\Acads\Sem_4\PCB\pcb_projects\arduino_shield\Arduino_Shield.SchDoc			

ESP8266 WiFi Module

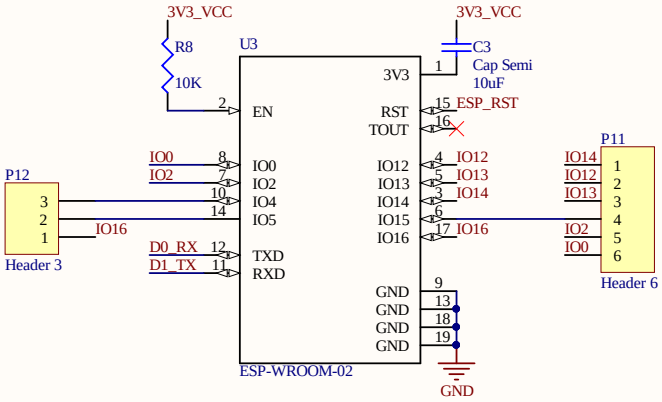

ESP Reset Switch

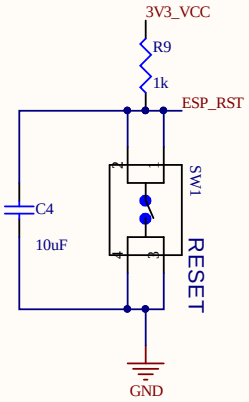

Title	*Arduino_Shield_2*		*University of Colorado Boulder*
Size: A4	Number: 2	Revision: 0	
Date: 4/19/2019	Time: 11:20:02 PM	Sheet 2 of 2	
File: D:\UCBoulder\Acads\Sem_4\PCB\pcb_projects\arduino_shield\Arduino_Shield_2.SchDoc			

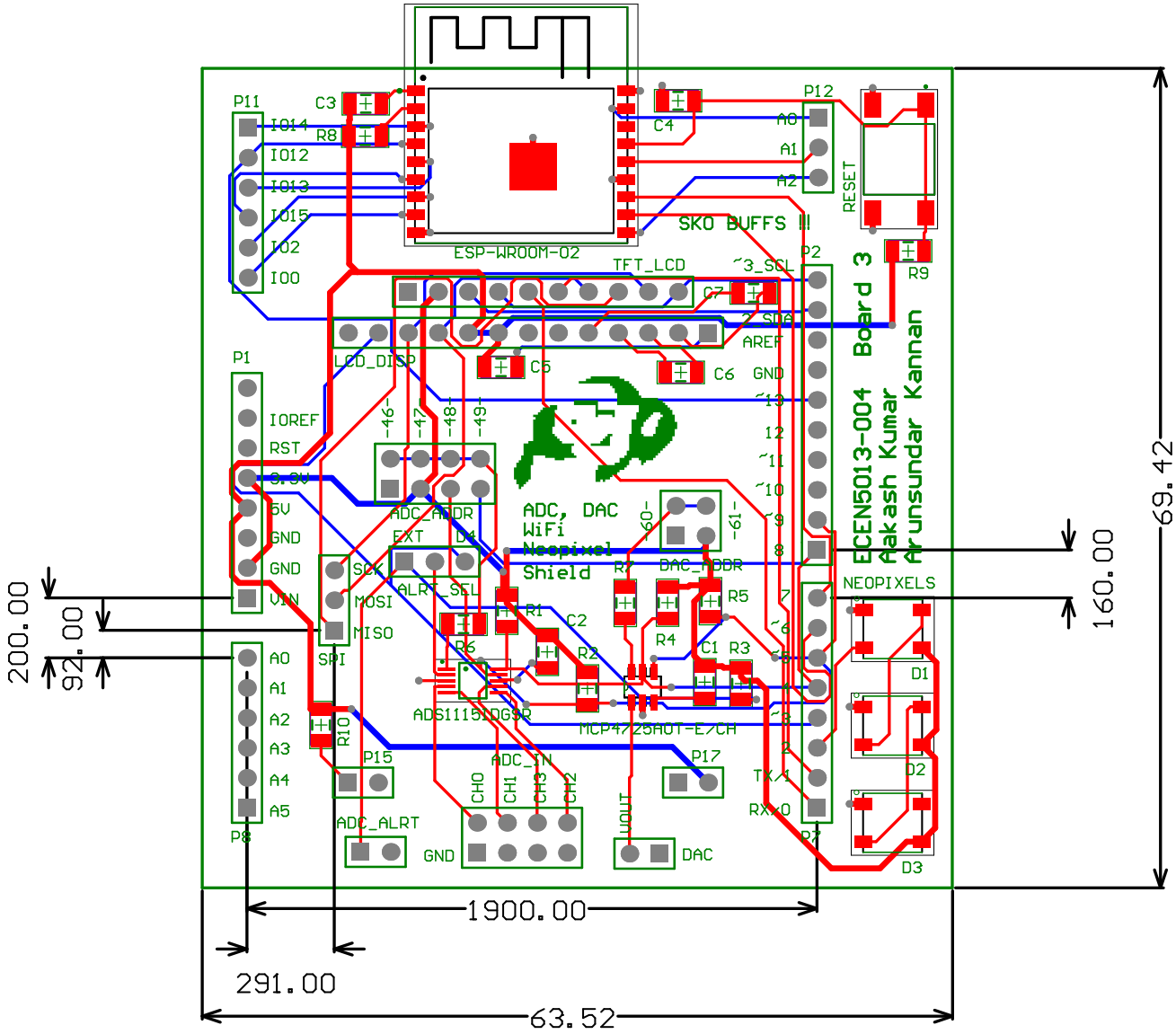
ECEN5013-004 Board 3
Aakash Kumar
Arunsundar Kannan
SKO BUFFS !!
ESP-WROOM-02
TFT_LCD
LCD_DISP
ADC, DAC
WiFi
Neopixel
Shield
ADC_ADDR
DAC_ADDR
ADS1115DGSR
MCP4725A0T-E/CH
NEOPIXELS
RESET
SPI
P11
P12
P1
P2
P8
P7
P15
P17
ADC_ALRT
DAC
GND
1900.00
291.00
63.52
200.00
92.00
160.00
69.42