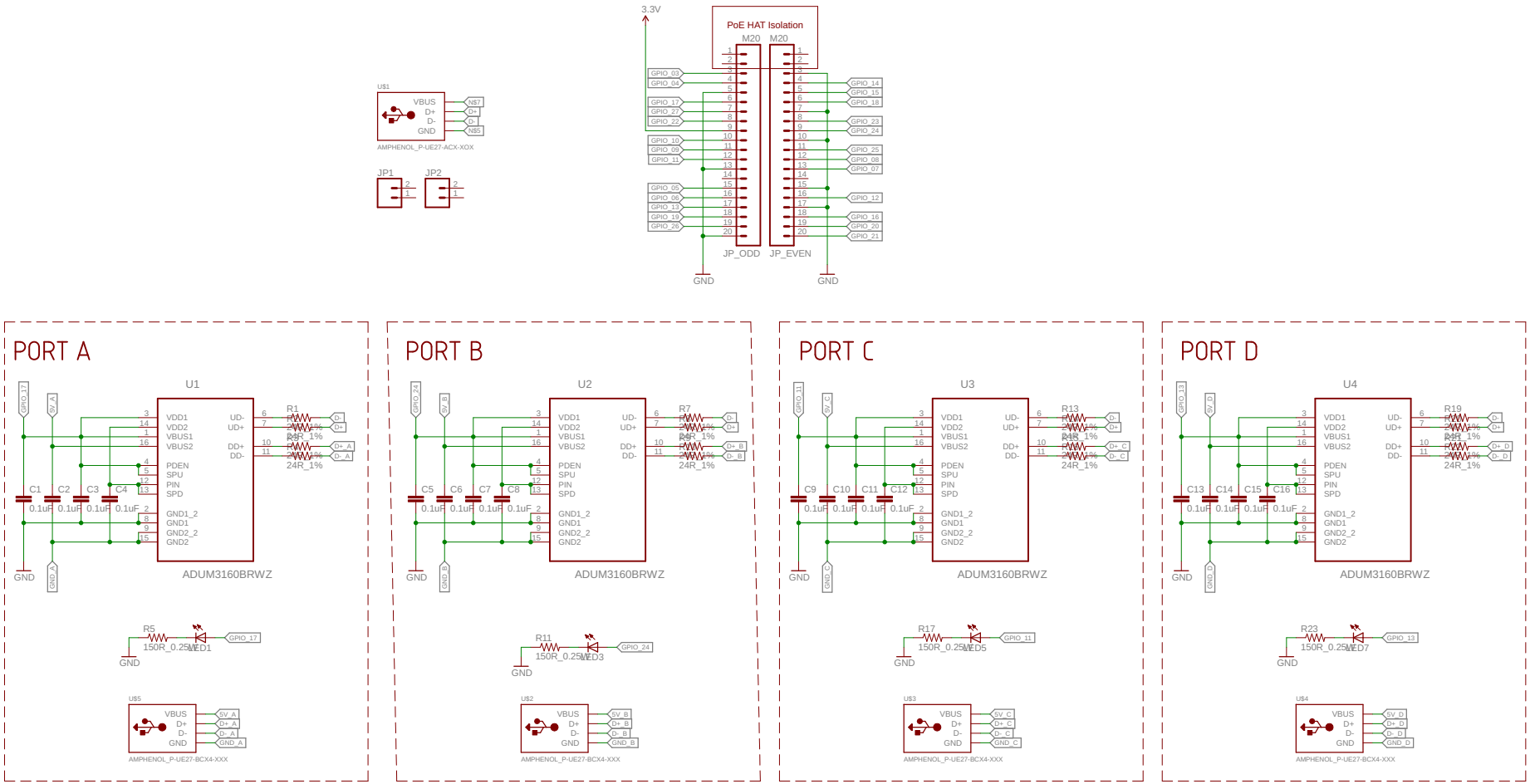
PoE HAT Isolation
3.3V
M20
M20
JP_ODD
JP_EVEN
GND
GND
U$1
VBUS
D+
D-
GND
AMPHENOL_P-UE27-ACX-XOX
JP1
JP2
PORT A
PORT B
PORT C
PORT D
U1
U2
U3
U4
VDD1
VDD2
VBUS1
VBUS2
PDEN
SPU
PIN
SPD
GND1_2
GND1
GND2_2
GND2
UD-
UD+
DD+
DD-
ADUM3160BRWZ
R1
R7
R13
R19
24R_1%
C1
C2
C3
C4
C5
C6
C7
C8
C9
C10
C11
C12
C13
C14
C15
C16
0.1uF
R5
R11
R17
R23
150R_0.25W
LED1
LED3
LED5
LED7
U$5
U$2
U$3
U$4
AMPHENOL_P-UE27-BCX4-XXX